ASRock

PG34WQ15R2B
(PG34WQ15R)

User Manual

Published November 2022
Copyright©2022 ASRock INC. All rights reserved.

Copyright Notice

No part of this documentation may be reproduced, transcribed, transmitted, or translated in any language, in any form or by any means, except duplication of documentation by the purchaser for backup purpose, without written consent of ASRock Inc.

Products and corporate names appearing in this documentation may or may not be registered trademarks or copyrights of their respective companies, and are used only for identification or explanation and to the owners' benefit, without intent to infringe.

This device complies with Part 15 of the FCC Rules. Operation is subject to the following two conditions:
(1) this device may not cause harmful interference, and
(2) this device must accept any interference received, including interference that may cause undesired operation.

Disclaimer

Because the monitor specifications and the firmware might be updated, the content of this documentation will be subject to change without notice. In case any modifications of this documentation occur, the updated version will be available on ASRock's website without further notice. If you require technical support related to this motherboard, please visit our website for specific information about the model you are using. You may find the latest monitor support list on ASRock's website as well.
ASRock Website: http://www.asrock.com

HIGH-DEFINITION MULTIMEDIA INTERFACE

This product incorporates HDMI technology.

Table of Contents

Chapter 1 Introduction 4

1.1 Package Contents 4

1.2 Installation Instructions 5

Chapter 2 Specifications 11

2.1 Monitor specifications 11

2.2 Preset Display Modes 11

Chapter 3 Monitor Overview 15

Chapter 4 Adjusting the Viewing Angle 18

Chapter 5 Connecting the Monitor 19

Chapter 6 OSD Setup 20

6.1 OSD Keys 20

6.2 OSD Menus (The descriptions for function control) 21

Chapter 7 Troubleshooting 26

Chapter 8 Safety Instructions 27

Chapter 1 Introduction

Thank you for purchasing PG34WQ15R2B, a reliable monitor produced under ASRock's consistently stringent quality control. It delivers excellent performance with robust design conforming to ASRock's commitment to quality and endurance.

1.1 Package Contents

- ASRock PG34WQ15R2B Monitor Head
- ASRock PG34WQ15R2B Stand
- ASRock PG34WQ15R2B Quick Start Guide
- DisplayPort Cable (DisplayPort to DisplayPort)
- HDMI Cable
- Power Cord
- Wi-Fi Antenna Cables
- PG Cable Sleeve

⚠ Important

Contact your place of purchase or local distributor if any of the items is damaged or missing.

Package contents may vary by country.

The included power cord is exclusively for this monitor and should not be used with other products.

1.2 Installation Instructions

Leave the monitor in its protective foam packaging. Align the latches of the stand to the monitor. Tighten the stand with screws.

Connect the stand base to the stand and tighten the screw to secure the stand base.

Align the latches to place the stand cover.

Adjust the angle of the stand, make sure the stand assembly is properly installed before setting the monitor upright.

⚠ Important

Remove the screws on the monitor groove if needed before installing the stand.

Place the monitor on a soft, protected surface to avoid scratching the display panel.

Do not use any sharp objects on the panel.

The groove for installing the stand bracket can also be used for wall mount. Please contact your dealer for proper wall mount kit.

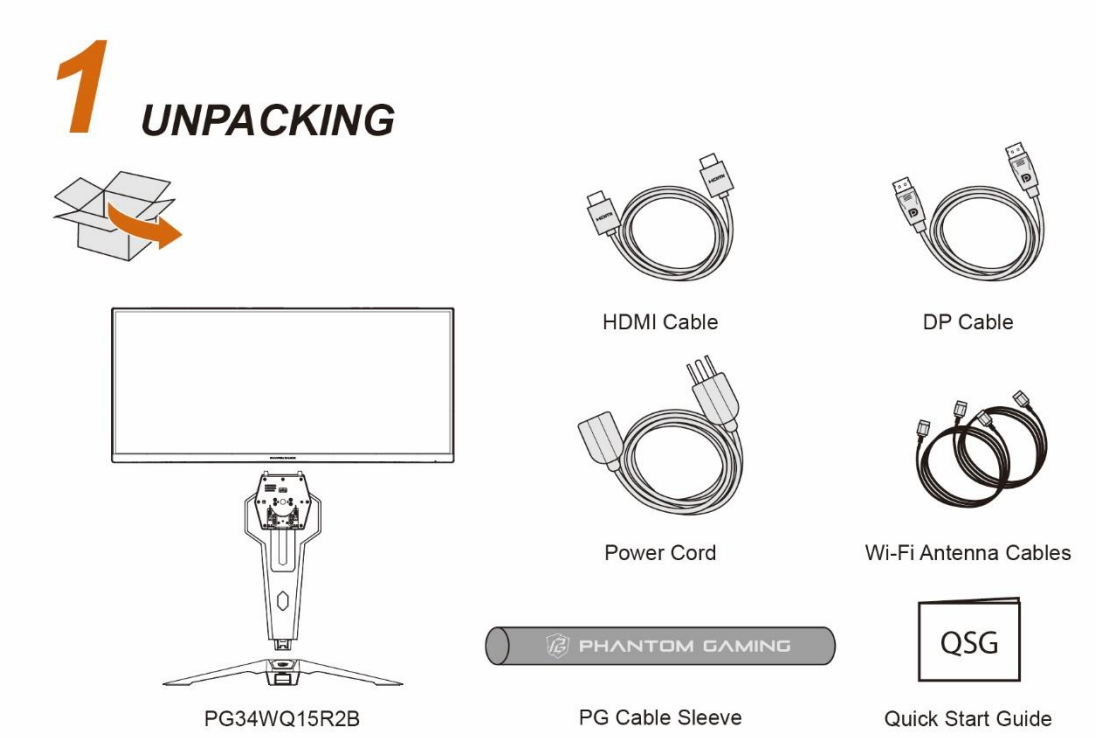

2 ATTACHING THE BASE & TIGHTENING THE SCREW

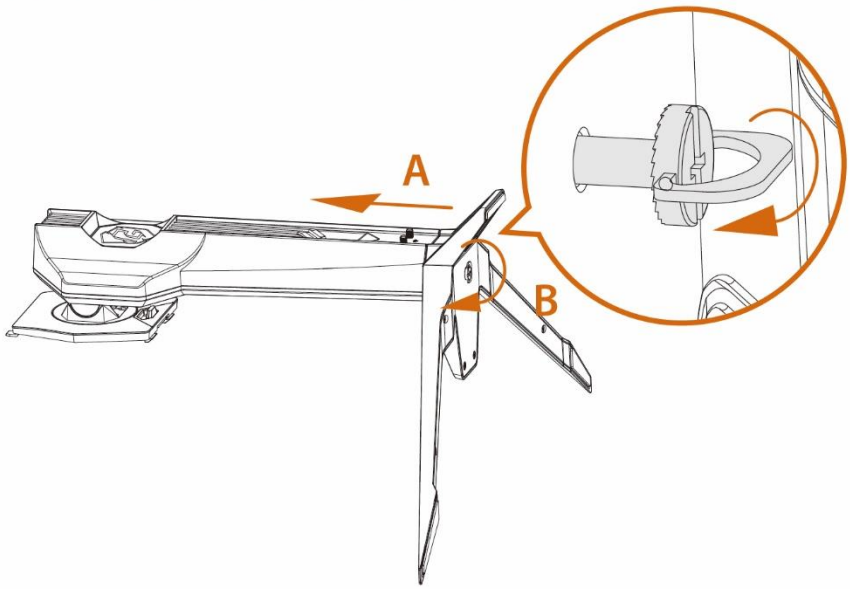

3 INSTALLING THE MONITOR STAND

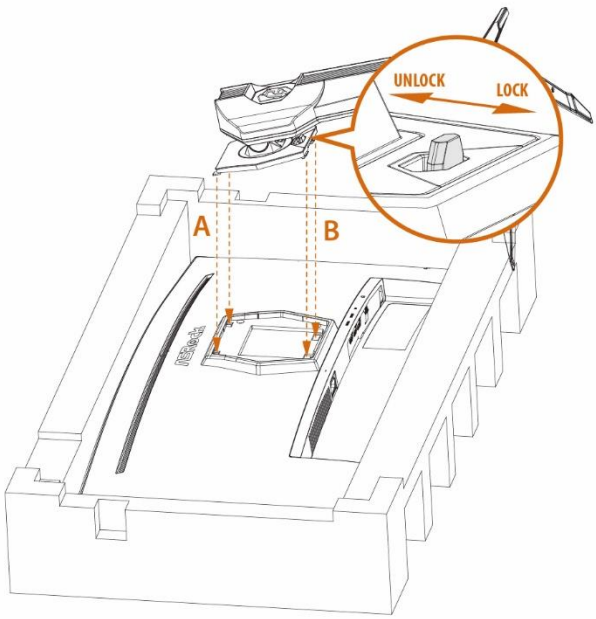

4 I/O PORTS

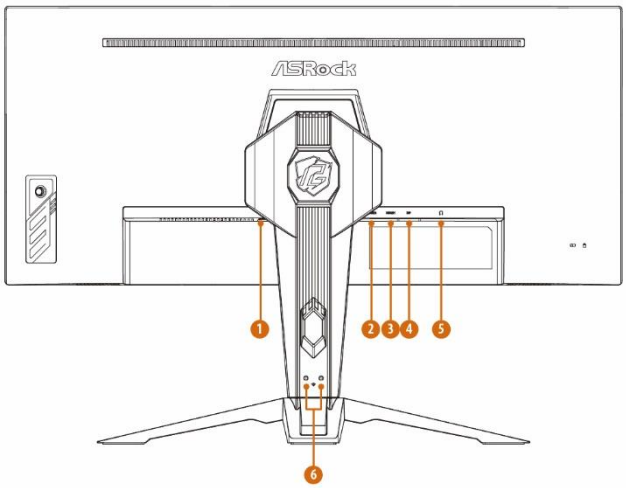

No.	Item
1	AC Input
2	HDMI Input
3	HDMI Input
4	DisplayPort Input
5	Audio Ouput
6	Antenna Ports (SMA Connectors)

5 CONNECTING CABLES

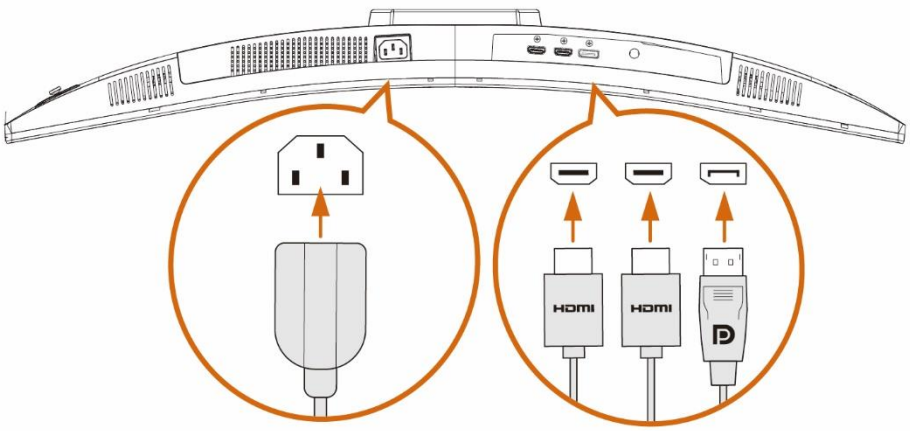

6 CONNECTING THE MONITOR TO A PC

***Use either the HDMI or the DisplayPort connection for display.**

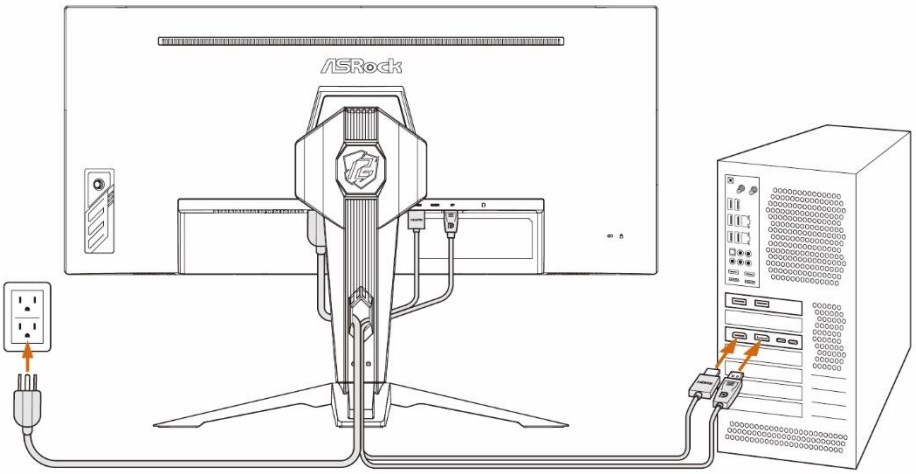

7 CONNECTING ANTENNA CABLES BETWEEN THE MONITOR AND THE ANTENNA PORTS ON PC.

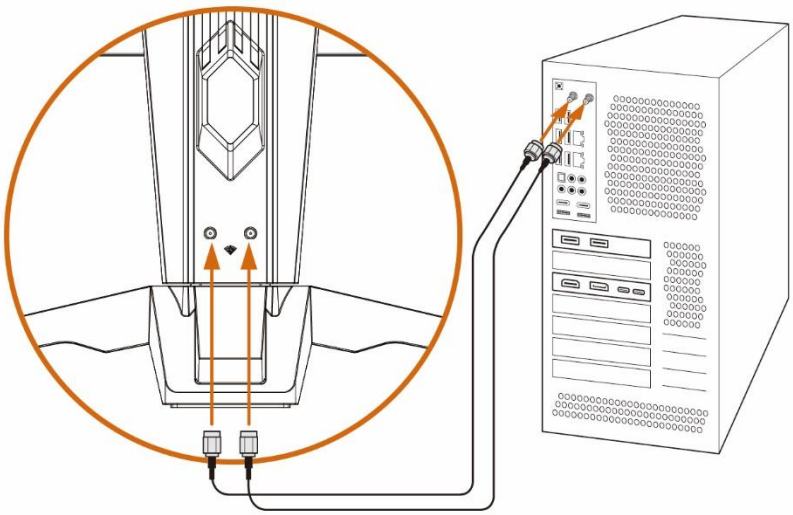

8 MANAGING YOUR CABLES

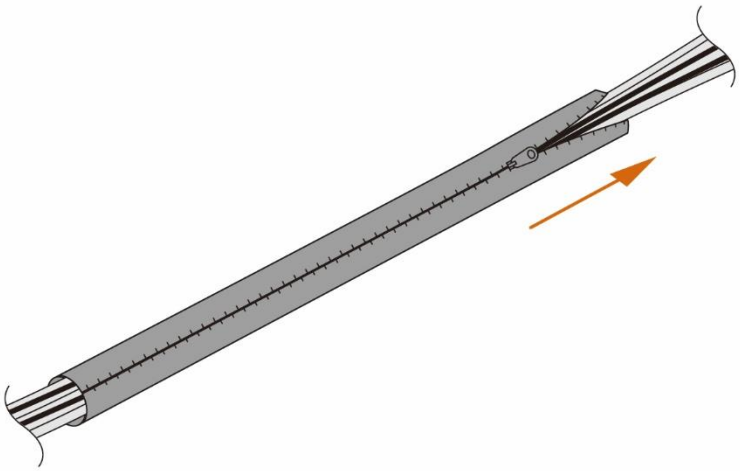

9 POWERING ON

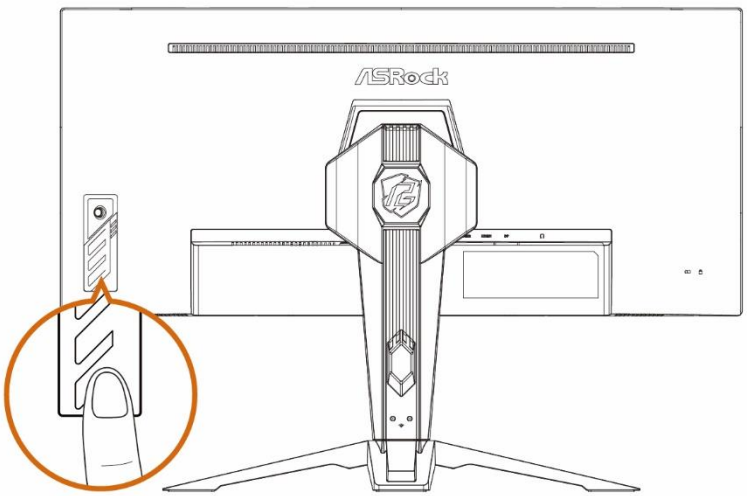

10 ADJUSTING THE TILT & SWIVEL ANGLE

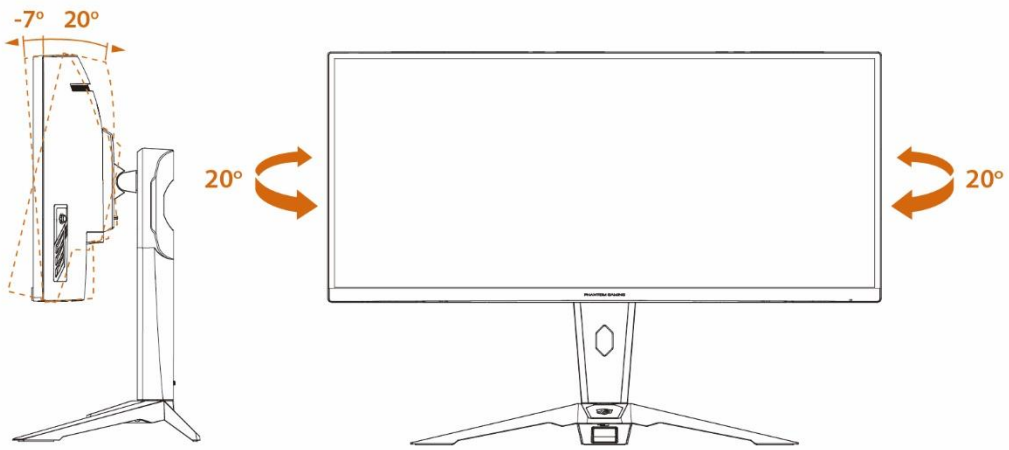

Chapter 2 Specifications

2.1 Monitor specifications

Monitor	ASRock PG34WQ15R2B
Size	34 inch
Curvature	Curved
Panel Type	VA
Resolution	3,440 x 1,440
Horizontal scan range	30 ~ 260KHz
Vertical scan range	48 ~ 165Hz
Aspect Ratio	21:9
Brightness (nits)	550
Contrast Ratio	3000:1
Refresh Rate	165Hz
Response Time	1ms(MPRT)
I/O Ports	• DisplayPort x 1 • HDMI Port x 2 • Earphone Jack x 1
View Angles	178°(H) , 178°(V)
Color Space	85% NTSC
Surface Treatment	Anti-Glare
Display Colors	16.7M
Monitor Power Options	100~240Vac, 50/60Hz, 1.5A
Power Consumption	Power On <100W(Max); Power Saving < 0.5W; Power Off <0.3W
Adjustment (Tilt)	-7° ~ 20°
Adjustment (Swivel)	-20° ~ 20°
Adjustment (Height)	0~100 mm
VESA Mounting	• Plate Type: 100 x 100mm • Screw Type: M4 x 10 mm
Dimension (W x H x D)	809.34*574.46*283.10 mm (With Stand)
Weight	8.8kg (Net) 12.35 kg (Gross)

Monitor	ASRock PG34WQ15R2B
Environment	Operating • Temperature: 0℃ to 40℃ • Humidity: 10% to 85%, non-condensing • Altitude: 0 ~ 3658m Storage • Temperature: -20℃ to 60℃ • Humidity: 5% to 80%, non-condensing • Altitude : 0~12192m

2.2 Preset Display Modes

Standard	Resolution	PG34WQ15R			Remark
		HDMI	DP	HDR	
IBM MODE DOS	720x400 @70Hz	V	V		
VGA	640x480 @60Hz	V	V		
	640x480 @67Hz	V	V		
	640x480 @72Hz	V	V		
	640x480 @75Hz	V	V		
SVGA	800x600 @56Hz	V	V		
	800x600 @60Hz	V	V		
	800x600 @72Hz	V	V		
	800x600 @75Hz	V	V		
XGA	1024x768 @60Hz	V	V		
	1024x768 @70Hz	V	V		
	1024x768 @75Hz	V	V		
SXGA	1280x1024 @60Hz	V	V		
	1280x1024 @75Hz	V	V		
WXGA+	1440x900 @60Hz	V	V		
WSXGA+	1680x1050 @60Hz	V	V		
----	1152x864 @75Hz	V	V		
	1280x960 @60Hz	V	V		
	1280x720 @60Hz	V	V		
Full HD	1920x1080 @60Hz	V	V	V	
	1920x1080 @100Hz				
	1920x1080 @120Hz				
	1920x1080 @144Hz				
	1920x1080 @165Hz				
	1920x1080 @240Hz				
QHD	2560x1440 @60Hz	V	V		DTD
	2560x1440 @120Hz	V	V		DTD
	2560x1440 @144Hz				
	2560x1440 @165Hz				

WQHD	3440x1440 @60Hz	V	V	V	DTD (Default)
	3440x1440 @85Hz	V	V	V	DTD
	3440x1440 @100Hz	V	V	V	DTD
	3440x1440 @120Hz		V	V	DTD
	3440x1440 @144Hz				
	3440x1440 @165Hz		V	V	DTD
UHD	3840x2160 @60Hz				
	3840x2160 @120Hz				
	3840x2160 @144Hz				
Video Timing Resolution	640x480P 59.94/60Hz 4:3				
	720x480P 59.94/60Hz 4:3				
	720x480P 59.94/60Hz 16:9	V	V		
	720x576P 50Hz 4:3	V	V		
	720x576P 50Hz 16:9		V		
	1280x720P 50Hz 16:9	V	V		
	1280x720P 59.94/60Hz 16:9	V	V		
	1920x1080P 59.94/60Hz 16:9	V	V	V	
	1920x1080P 119.88/120Hz 16:9/1:1		V	V	
	2160P @25Hz				
	2160P @30Hz	V			
	2160P @50Hz	V		V	
	2160P @60Hz	V		V	
	2160p @120Hz				

Chapter 3 Monitor Overview

Front view

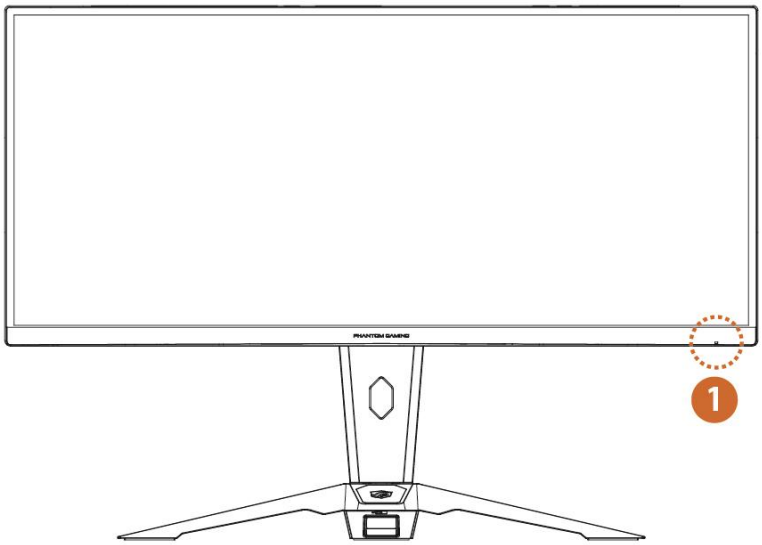

No.	Item	LED Indication
1	**Power Indicator**	• Blue - Power on mode • Orange - Standby mode • LED Off - Off mode

Back side

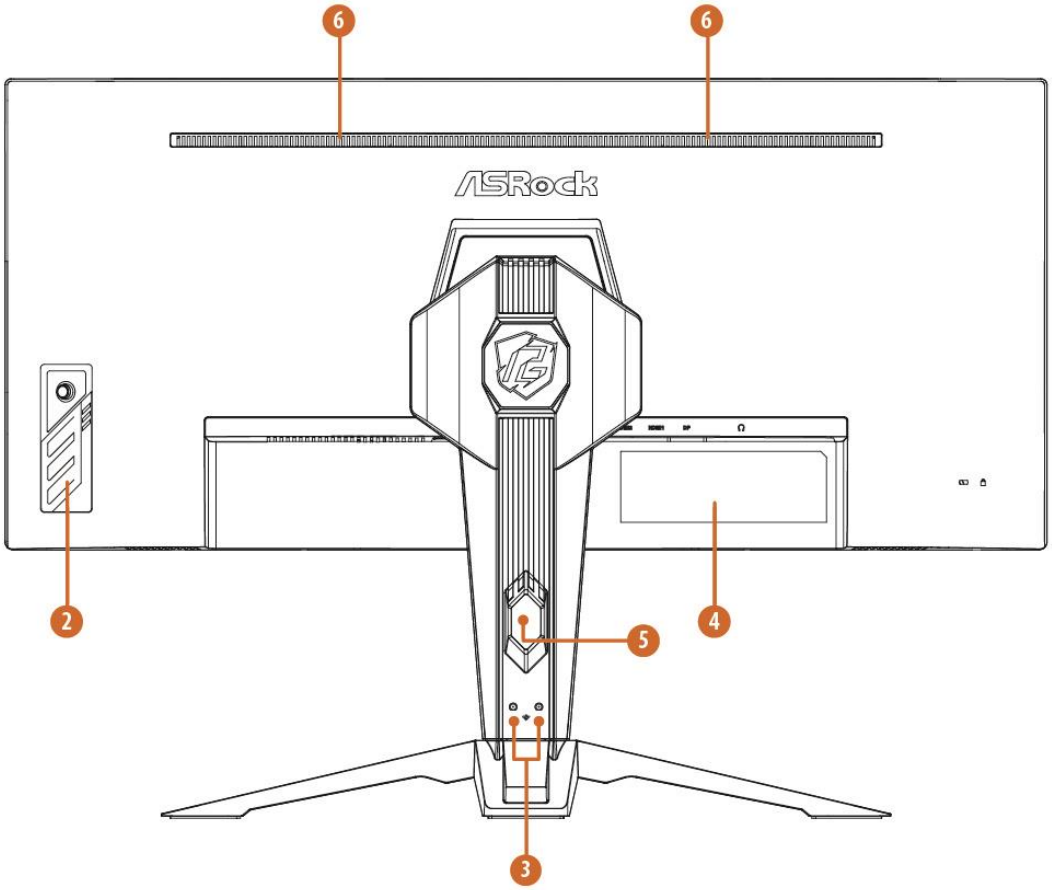

No.	Description
2	OSD Keys
3	Antenna Ports (SMA Connectors)
4	Serial Label
5	Cable Management Slot
6	Built-in Speakers (2x2W)

Bottom Side

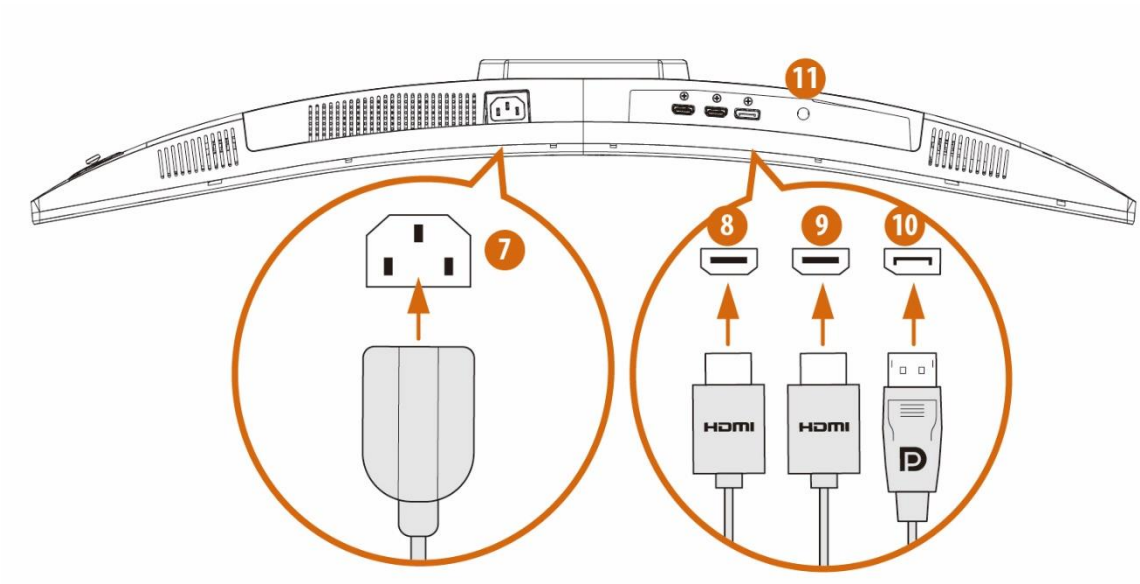

No.	Item
7	AC input
8	HDMI input
9	HDMI input
10	DisplayPort input
11	Audio output

Chapter 4 Adjusting the Viewing Angle

For optimal viewing, it is recommended to look at the full face of the monitor, and then adjust the monitor's angle to your own preference.
Hold the stand so you do not topple the monitor when you adjust the monitor's angle.
You are able to adjust the tilted angle from -7° to 20°.

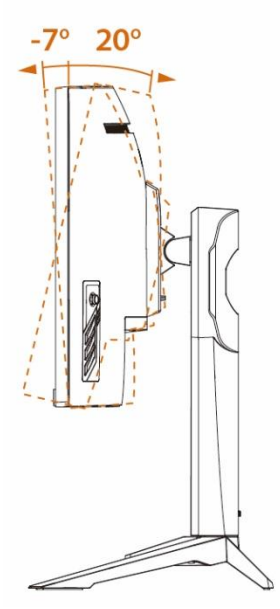

⚠ Important

Avoid touching the display panel when adjusting the monitor.

You are able to swivel the monitor for the angle.

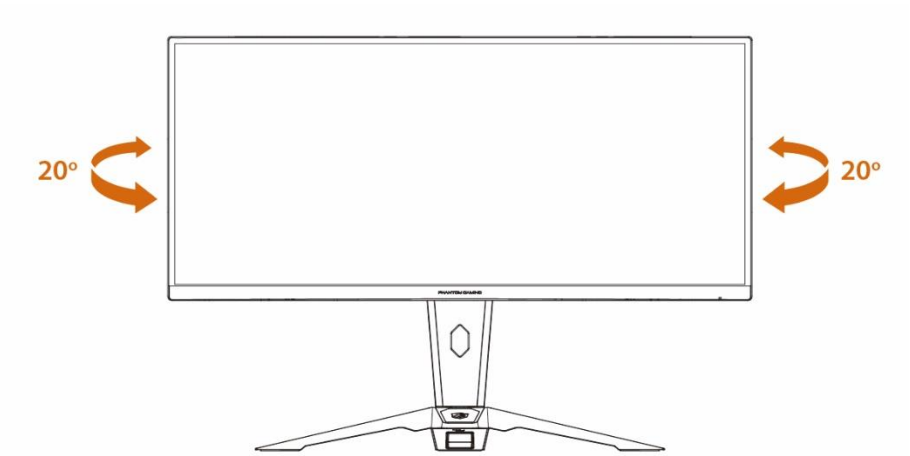

NOTE:
Do not touch the LCD screen when you adjust the angle. It may cause damage or break the LCD screen.
Careful attention is required not to catch your fingers or hands when you adjust the angle.

Chapter 5 Connecting the Monitor

1. Turn off your computer.
2. Connect the video cable from the monitor to your computer.
3. Connect the power cord to the monitor power jack.
4. Plug the power cord into the electrical outlet.
5. Turn on the monitor.
6. Power on the computer and the monitor will auto detect the signal source.
7. Plug one end of the DisplayPort/HDMI cable to the monitor's DisplayPort/HDMI port.
   *Use either the HDMI or DisplayPort connection for display.
8. Connect the other end of the DisplayPort/HDMI cable to your computer's DisplayPort/HDMI port.
9. Connecting antenna cables between the monitor and the antenna ports on PC.

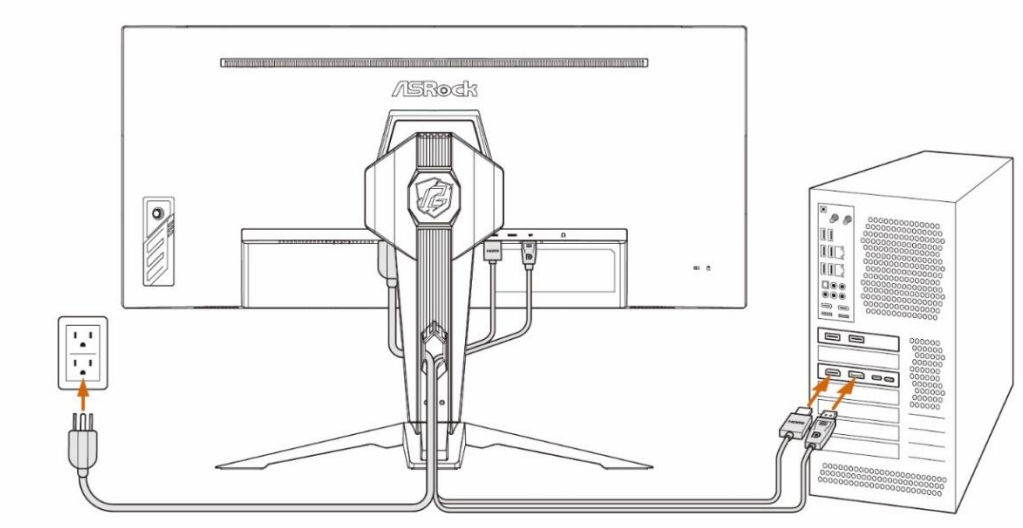

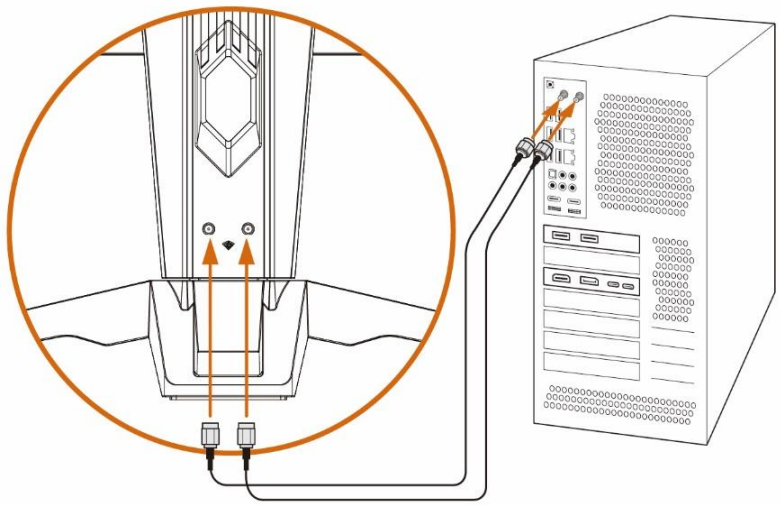

Chapter 6 OSD Setup

This chapter provides you with essential information on OSD Setup.

⚠ Important

All information is subject to change without prior notice.

6.1 OSD Keys

The monitor comes with OSD Keys that help navigate the On-Screen Display (OSD) menu.

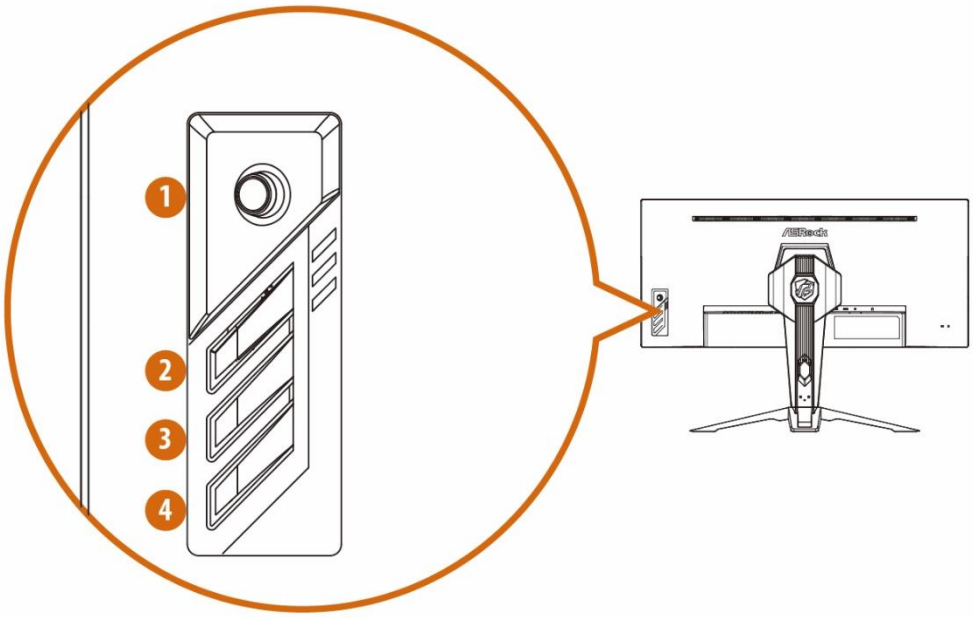

No.	Item	Description
1	**Navi Key**	A multi-directional control that helps navigate the On-Screen Display (OSD) menu.
2	**Preset Modes**	Activates the Presets Modes function when the OSD is OFF, navigate through adjustment icons when OSD is ON, or adjust a function when function is activated.
3	**Brightness**	Adjusts the backlight when the OSD is OFF..
4	**Power**	Press the power button to turn on/off the monitor.

6.2 OSD Menus (The descriptions for function control)

Function: Luminance

Main Menu Item	Sub Menu Item	Sub Menu	Description
Luminance	Contrast	0-100	Contrast from Digital-register.
	Brightness	0-100	Backlight Adjustment
	Preset Modes	Standard	Standard Mode
		Text	Text Mode
		Internet	Internet Mode
		Game	Game Mode
		Movie	Movie Mode
		Sports	Sports Mode
	DCR	On	Dynamic contrast ratio
		Off	
	MPRT	On	MPTRT function On/Off

Function: Image Setup

Main Menu Item	Sub Menu Item	Sub Menu	Description
Image Setup	Image Ratio	Full	Select Image Aspect Ratio
		Aspect	
	OD	On	Overdrive Adjustment
		Off	
	FreeSync Premium	On	FreeSync Premium On or Off
		Off	
	HDR	Auto	HDR Auto or Off
		Off	

Function: Color Temp.

Main Menu Item	Sub Menu Item	Sub Menu	Description
Color Temp.	Warm	–	Recall Warm Color Temperature from EEPROM.
	Normal	–	Recall Normal Color Temperature from EEPROM.
	Cool	–	Recall Cool Color Temperature from EEPROM.
	User	Red	Red Gain from Digital-register.
		Green	Green Gain from Digital-register.
		Blue	Blue Gain from Digital-register.
	sRGB	–	Recall sRGB Color Temperature from EEPROM.

Function: OSD Setup

Main Menu Item	Sub Menu Item	Sub Menu	Description
OSD Setup	H. Position	0-100	Adjust the horizontal position of OSD
	V. Position	0-100	Adjust the vertical position of OSD
	Timeout	5-100	Adjust the OSD Timeout
	Language	–	Select the OSD language

Function: Extra

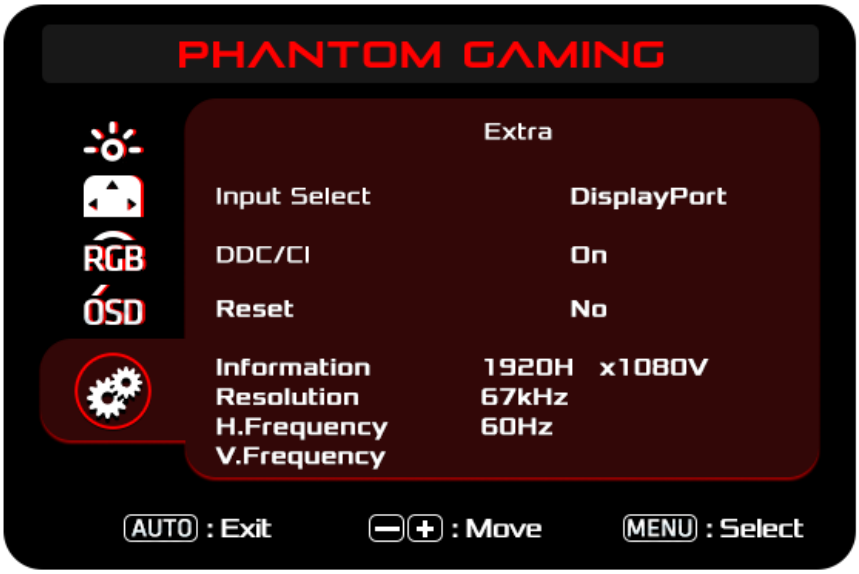

Main Menu Item	Sub Menu Item	Sub Menu	Description
Extra	Input Select	Auto	Select input source
		HDMI1	
		HDMI2	
		DisplayPort	
	DDC/CI	On or Off	Turn ON/OFF DDC/CI Support
	Reset	Yes or No	Reset the menu to default.
	Information	—	Show the information of the main image source.

Chapter 7 Troubleshooting

Problem and Question	Possible Solution
Power LED is not on	• Check if the Power Switch is in the ON position. • Power Cord should be connected.
No signal	• Check that the signal-cable is properly connected. If the connector is loose, tighten the connector's screws. • Check the signal-cable's connection pins for damage.
Picture is fuzzy	• Adjust the Contrast and Brightness Controls.
Picture bounces or a wave pattern is present in the picture	• Move electrical devices that may cause electrical interference.
The power LED is ON (Orange) but there's no video or no picture.	• Computer Power Switch should be in the ON position. • Computer Video Card should be snugly seated in its slot. • Make sure Monitor's video cable is properly connected to the computer. • Inspect Monitor's video cable and make sure none of the pins are bent. • Make sure computer is operational by hitting the CAPS LOCK key on the keyboard while observing the CAPS LOCK LED.The LED should either turn ON or OFF after hitting the CAPS LOCK key.
Missing one of the primary colors (RED, GREEN, or BLUE)	• Inspect the Monitor's video cable and make sure that none of the pins are bent.
Picture has color defects (white does not look white)	• Adjust RGB color or select color temperature.
Poor brightness or contrast	• When the brightness of the screen lowers after being used for a certain period and the function of the display is affected, send it to our authorized service center for repair.

Chapter 8 Safety Instructions

• Read the safety instructions carefully and thoroughly.
• All cautions and warnings on the device or User Guide should be noted.
• Refer servicing to qualified personnel only.

Power

• Make sure that the power voltage is within its safety range and has been adjusted properly to the value of 100~240V before connecting the device to the power outlet.
• If the power cord comes with a 3-pin plug, do not disable the protective earth pin from the plug. The device must be connected to an earthed mains socket-outlet.
• Please confirm the power distribution system in the installation site shall provide the circuit breaker rated 120/240V, 20A (maximum).
• Always disconnect the power cord or switch the wall socket off if the device would be left unused for a certain time to achieve zero energy consumption.
• Place the power cord in a way that people are unlikely to step on it. Do not place anything on the power cord.
• If this device comes with an adapter, use only the ASRock provided AC adapter approved for use with this device.

European Union:

Batteries, battery packs, and accumulators should not be disposed of as unsorted household waste. Please use the public collection system to return, recycle, or treat them in compliance with the local regulations.

California, USA:

The button cell battery may contain perchlorate material and requires special handling when recycled or disposed of in California. For further information please visit: https://dtsc.ca.gov/perchlorate/

Environment

• To reduce the possibility of heat-related injuries or of overheating the device, do not place the device on a soft, unsteady surface or obstruct its air ventilators.
• Use this device only on a hard, flat and steady surface.
• To prevent the device from tipping over, secure the device to a desk, wall or fixed object with an anti-tip fastener that helps to properly support the device and keep it safe in place.
• To prevent fire or shock hazard, keep this device away from humidity and high temperature.
• Do not leave the device in an unconditioned environment with a storage temperature
above 60℃ or below -20℃, which may damage the device.
• The maximum operating temperature is around 40℃.
• When cleaning the device, be sure to remove the power plug. Use a piece of soft cloth rather than industrial chemical to clean the device. Never pour any liquid into the opening; that could damage the device or cause electric shock.
• Always keep strong magnetic or electrical objects away from the device.
• If any of the following situations arises, get the device checked by service personnel:
• The power cord or plug is damaged.
• Liquid has penetrated into the device.
• The device has been exposed to moisture.
• The device does not work well or you can not get it working according to the User Guide.
• The device has dropped and damaged.
• The device has obvious sign of breakage.

Warning!

Overuse of screens is likely to affect eyesight.

Recommendations:

Take a 10-minute break for every 30 minutes of screen time.
Children under 2 years of age should have no screen time. For children aged 2 years and over, screen time should be limited to less than one hour per day.

CE Conformity

This device complies with the requirements set out in the Council Directive on the Approximation of the Laws of the Member States relating to Electromagnetic Compatibility (2014/30/EU), Low-voltage Directive (2014/35/EU), ErP Directive (2009/125/EC) and RoHS directive (2011/65/EU). This product has been tested and found to comply with the harmonized standards for Information Technology Equipment published under Directives of Official Journal of the European Union.

ASRock Contact Information

ASRock EUROPE B.V.
Address : Bijsterhuizen 11-11, 6546 AR Nijmegen,The Netherlands
Phone: +31-24-345-44-33

Technical Support

Phone: +31-24-345-44-33
Online Support https://event.asrock.com/tsd.asp

Product information for EU energy label

https://eprel.ec.europa.eu/qr/1115756

FCC-B Radio Frequency Interference Statement

This equipment has been tested and found to comply with the limits for a Class B digital device, pursuant to Part 15 of the FCC Rules. These limits are designed to provide reasonable protection against harmful interference in a residential installation. This equipment generates, uses and can radiate radio frequency energy and, if not installed and used in accordance with the instruction manual, may cause harmful interference to radio communications. However, there is no guarantee that interference will not occur in a particular installation. If this equipment does cause harmful interference to radio or television reception, which can be determined by turning the equipment off and on, the user is encouraged to try to correct the interference by one or more of the measures listed below:

• Reorient or relocate the receiving antenna.

• Increase the separation between the equipment and receiver.

• Connect the equipment into an outlet on a circuit different from that to which the receiver is connected.

• Consult the dealer or an experienced radio/television technician for help.

Notice 1

The changes or modifications not expressly approved by the party responsible for compliance could void the user's authority to operate the equipment.

Notice 2

Shielded interface cables and AC power cord, if any, must be used in order to comply with the emission limits.

This device complies with Part 15 of the FCC Rules. Operation is subject to the following two conditions:

This device may not cause harmful interference, and

This device must accept any interference received, including interference that may cause undesired operation.

ASRock Contact Information

ASRock America, Inc.

Address : 13848 Magnolia Ave, Chino, CA91710, U.S.A.

Phone: +1-909-590-8308

Technical Support

Phone: +1-909-590-8308

Online Support https://event.asrock.com/tsd.asp

WEEE Statement

Under the European Union (“EU”) Directive on Waste Electrical and Electronic Equipment, Directive 2012/19/EU, products of “electrical and electronic equipment” cannot be discarded as municipal waste anymore and manufacturers of covered electronic equipment will be obligated to take back such products at the end of their useful life.

Chemical Substances Information

In compliance with chemical substances regulations, such as the EU REACH Regulation (Regulation EC No. 1907/2006 of the European Parliament and the Council), ASRock provides the information of chemical substances in products at:

RoHS Statement

Japan JIS C 0950 Material Declaration

A Japanese regulatory requirement, defined by specification JIS C 0950, mandates that manufacturers provide material declarations for certain categories of electronic products offered for sale after July 1, 2006.

India RoHS

This product complies with the “India E-waste (Management and Handling) Rule 2016” and prohibits use of lead, mercury, hexavalent chromium, polybrominated biphenyls or polybrominated diphenyl ethers in concentrations exceeding 0.1 weight % and 0.01 weight % for cadmium, except for the exemptions set in Schedule 2 of the Rule.

Copyright and Trademarks Notice

Copyright © ASRock Inc. All rights reserved. The ASRock logo used is a registered trademark of ASRock Inc. All other marks and names
mentioned may be trademarks of their respective owners. No warranty as to accuracy or completeness is expressed or implied. ASRock reserves the right to make changes to this document without prior notice.

Technical Support

If a problem arises with your product and no solution can be obtained from the user's manual, please contact your place of purchase or local distributor. Alternatively, please visit https://www.asrock.com for further guidance.