Installation and Operation Manual

Solar Inverter
M50A_260 (Delta part number RPI503M260000)
Product version L or M

Europe

Installation and Operation Manual M50A_260 RPI503M260000 Product version L or M EU V1.3 EN 2023-03-30

This manual applies to the inverter models:

- M50A_260 (Delta part number RPI503M260000, product version L)

and DSS software version 6.0 or higher

The Delta part number can be found on the type plate of the inverter.

Delta manuals undergo continuous revision in order to provide you with complete information regarding the installation and operation of its inverters. Therefore, before starting installation work, **always** consult solarsolutions.delta-emea.com to check whether a newer version of the Quick Installation Guide or the Installation and Operation Manual is available.

© Copyright – Delta Electronics (Netherlands) B.V. – All rights reserved.

This manual is intended for use by electrical installers who are trained and approved for installation and commissioning of grid-connected solar inverters.

The information in this manual is to be treated as confidential and no part of this manual may be reproduced without prior written permission from Delta Electronics. The information in this manual may not be used for any purpose not directly connected to the use of the inverter.

All information and specifications can be modified without prior notice.

All translations of this manual that are not authorized by Delta Electronics (Netherlands) B.V. must be marked with the words "Translation of the original operating instructions."

Delta Electronics (Netherlands) B.V.

Tscheulinstraße 21

79331 Teningen

Germany

Authorized representative for this product in the EU:

Delta Electronics (Netherlands) B.V.

Zandsteen 15

2132 MZ Hoofddorp

Netherlands

Information about the versions of this manual

Version	Date	Changes	Page
1.0	2021-04-23	First edition for product versions L or M.	
1.1	2021-10-21	Recommended size of the upstream circuit breaker:	
		Changed from 160 A to 125 A.	37
		AC cable specification:	
		Information on cable diameters and conductor cross-sections corrected.	39
		Information on torques added.	77
1.2	2022-12-06	Dimensional drawings supplemented by additional dimensions.	35
		Tightening torque of the hexagon socket screws for the L1, L2, L3 and N connections of the AC terminal block corrected.	39
1.3	2023-03-30	Incorrect descriptions in sections „5.5.3 Arrangement of the DC inputs on the DC connection panel“, page 42 and „5.5.4 Functioning of integrated string monitoring“, page 42 corrected.	

Notes on the product versions

Product version	Changes to the previous model
L / M	This is a new product. The last letter of the serial number indicates the product version.

Table of Contents

1. About this manual . . . 8
1.1 Purpose of this manual . . . 8
1.2 Target audience of this manual . . . 8
1.3 Warning notices and warning symbols . . . 8
1.4 Writing and labeling conventions . . . 9

2. Basic safety instructions . . . 10

3. Intended purpose . . . 11

4. Product overview . . . 12
4.1 Scope of delivery . . . 12
4.1.1 Inverter . . . 12
4.1.2 Sub-1G antenna . . . 13
4.2 Accessories to be ordered separately . . . 14
4.3 Overview of components and connections . . . 15
4.4 LEDs . . . 17
4.5 AC-side components . . . 18
4.5.1 AC cable gland . . . 18
4.5.2 AC connection terminals . . . 18
4.5.3 AC Surge Protection Devices . . . 18
4.6 DC-side components . . . 19
4.6.1 DC connector panel . . . 19
4.6.2 DC disconnectors . . . 19
4.6.3 DC Surge Protection Devices . . . 20
4.7 Communication connection . . . 21
4.8 Grounding connection . . . 22
4.8.1 Grounding the inverter housing . . . 22
4.8.2 PE connection . . . 22
4.9 Cooling system . . . 23
4.9.1 Air inlet, air outlet and fan module . . . 23
4.9.2 Internal fans . . . 23
4.9.3 Internal heat sinks . . . 24
4.10 Sub-1G antenna . . . 25
4.11 Wi-Fi module . . . 26
4.12 Type plate and markings . . . 27

5. Planning the installation . . . 29
5.1 Installation location . . . 29
5.1.1 Requirements for the wall, ground and mounting system . . . 29
5.1.2 Installation height . . . 30
5.1.3 Installation position . . . 30
5.1.4 Outdoor Installations . . . 30
5.1.5 Lifting and Transporting the Inverter . . . 30
5.1.6 Installation clearances and air circulation . . . 31
5.2 Characteristic curves . . . 33
5.3 Dimensions . . . 35
5.4 Planning the grid connection (AC) . . . 37
5.4.1 Important safety instructions . . . 37
5.4.2 Residual current circuit breaker . . . 37
5.4.3 Integrated residual current monitoring unit . . . 37
5.4.4 AC Surge Protection Devices . . . 37

5.4.5 Permissible grounding systems . . . 37
5.4.6 Planning grounding of the inverter . . . 38
5.4.7 Permissible grid voltages . . . 39
5.4.8 Selecting the AC cable . . . 39
5.4.9 Special tools required . . . 40
5.5 Planning the connection of the solar modules (DC) . . . 41
5.5.1 Safety instructions . . . 41
5.5.2 Polarity of the DC voltage . . . 41
5.5.3 Arrangement of the DC inputs on the DC connection panel . . . 42
5.5.4 Functioning of integrated string monitoring . . . 42
5.5.5 Use of string fuses . . . 43
5.5.6 Specifications for the DC cables . . . 43
5.6 Planning the installation of type 1+2 AC and DC combination surge protection devices . . . 44
5.7 Planning the device communication and plant monitoring . . . 45
5.7.1 Introduction. . . . 45
5.7.2 Components of the communication card. . . . 45
5.7.3 Communication cable requirements . . . 46
5.7.4 Cable gland for the communication connection . . . 46
5.7.5 Connection of a data logger via RS485 . . . 46
5.7.6 Connection of a DC1 data collector from Delta . . . 47
5.7.7 Connecting an external alarm unit . . . 48
5.7.8 Connecting a ripple control receiver . . . 49
5.7.9 External power-off . . . 49
5.7.10 Connecting a PC . . . 50
5.8 Grid and system protection . . . 50

6. Planning the Commissioning . . . 51
6.1 Introduction. . . . 51
6.2 Commissioning options . . . 51
6.2.1 Delta Service Software (DSS) . . . 51
6.2.2 MyDeltaSolar app with direct connection to the inverter via Wi-Fi . . . 51
6.2.3 MyDeltaSolar app with DC1 Data Collector from Delta . . . 51

7. Installation . . . 52
7.1 Safety instructions . . . 52
7.2 Sequence of installation and commissioning steps . . . 53
7.2.1 General information . . . 53
7.3 Mounting the inverter. . . . 54
7.3.1 Ground mounting (upright) . . . 54
7.3.2 Wall mounting (suspended) . . . 55
7.4 Grounding the inverter housing . . . 57
7.4.1 Grounding via the grounding screw . . . 57
7.4.2 Grounding via the PE screw . . . 58
7.5 Preparing electrical installation. . . . 59
7.6 Connecting the communication card . . . 62
7.6.1 Connections on the communication card . . . 62
7.6.2 Threading the communication cable . . . 63
7.6.3 Connecting a data logger via RS485. . . . 65
7.6.4 Connecting an external alarm unit . . . 72
7.6.5 Connecting a ripple control receiver . . . 73
7.6.6 Connecting the external power-off (EPO) . . . 73
7.6.7 Connecting a PC via RS485 (optional). . . . 74
7.7 Connecting the grid (AC). . . . 75
7.7.1 General information . . . 75

Table of Contents

7.7.2 Handling aluminum conductors during installation work . . . 75
7.7.3 Instructions for the use of sector-shaped aluminum cables . . . 76
7.7.4 Special tools required . . . 76
7.7.5 AC cable gland . . . 77
7.8 Connecting the solar modules (DC) . . . 79
7.9 Completing electrical installation . . . 81

8. Commissioning . . . 83
8.1 Prerequisites for commissioning . . . 83
8.2 Commissioning with the Delta Service Software (DSS) . . . 83
8.3 Commissioning with the MyDeltaSolar app . . . 84
8.3.1 Direct connection between mobile device and inverter . . . 84
8.3.2 Mobile device connected to inverter via DC1 data collector . . . 84

9. Error events and troubleshooting . . . 85
9.1 Error . . . 86
9.2 Warnings . . . 87
9.3 Faults . . . 88

10. Disconnecting the inverter from the power supply before working on it . . . 90
10.1 Safety Instructions . . . 90
10.2 Procedure . . . 91

11. Replacing or cleaning components, installing accessories . . . 96
11.1 Safety Instructions . . . 97
11.2 General information . . . 98
11.3 Clean/replace internal fan 1 . . . 99
11.4 Clean/replace internal fan 2 . . . 103
11.5 Cleaning/replacing the fan module . . . 108
11.6 Cleaning the air outlets . . . 112
11.7 Installing/replacing DC surge protection devices . . . 114
11.7.1 Remove the DC surge protection device . . . 114
11.7.2 Transfer the screws for the new DC surge protection devices . . . 117
11.7.3 Install DC surge protection devices . . . 119
11.8 Installing/replacing type 1+2 combined AC surge protection devices . . . 121
11.8.1 Notes . . . 121
11.8.2 Remove the type 1+2 combined AC surge protection device . . . 121
11.8.3 Transfer screws for the new type 1+2 combined AC surge protection devices . . . 124
11.8.4 Install the type 1+2 combined AC Surge protection device . . . 125
11.9 Installing/replacing type 2 combined AC surge protection devices . . . 128
11.9.1 Notes . . . 128
11.9.2 Removing type 2 AC surge protection devices . . . 128
11.9.3 Transfer screws for the new type 2 AC surge protection devices . . . 131
11.9.4 Installing type 2 AC surge protection devices . . . 132
11.10 Installing/replacing the Sub-1G antenna . . . 134
11.10.1 Notes . . . 134
11.10.2 Removing the Sub-1G antenna . . . 134
11.10.3 Installing the Sub-1G antenna . . . 135
11.11 Installing/replacing the Wi-Fi module . . . 138
11.11.1 Notes . . . 138
11.11.2 Removing the Wi-Fi module . . . 138
11.11.3 Installing the Wi-Fi module . . . 140

12. Recommissioning the inverter after work . . . 142
12.1 Safety Instructions . . . 142
12.2 Procedure . . . 143

13. Replacing the inverter 146
13.1 Special notes on replacement 147
13.2 Sequence of work steps 148
13.3 Tools required 148
13.4 Disconnecting the inverter from the grid (AC) and solar modules (DC) 149
13.5 Remove the communication cable 154
13.6 Dismantling the type 1+2 combined AC surge protection device (optional) 155
13.7 Dismantling the type 1+2 combined DC surge protection device (optional) 155
13.8 Dismantling the Sub-1G antenna (optional) 156
13.8.1 Dismantling the Wi-Fi module (optional) 156
13.9 Removing and packing the inverter 157

14. Technical Data. 159

1. About this manual

1.1 Purpose of this manual

This manual is part of the inverter and supports the installation, commissioning and operation of the inverter.

Read this manual **before** working on the inverter.

Always follow the safety instructions and work instructions in this manual. This will ensure that the inverter can be safely installed, commissioned and operated.

Store this manual in a safe place in the vicinity of the inverter so that it is always quickly available when working on the inverter.

Delta Electronics is not responsible for damage resulting from failure to follow the safety and operating instructions set out in this manual.

1.2 Target audience of this manual

This manual is intended for installers who are trained and approved for the installation, commissioning and operation of solar inverters in grid-connected solar systems.

1.3 Warning notices and warning symbols

This manual uses the following warning notices and symbols to describe potential dangers and the measures necessary for reducing these dangers.

Always follow the instructions in the warning notices.

Warning levels

DANGER

Indicates a hazardous situation that, if not avoided, **will result** in death or serious injury.

WARNING

Indicates a hazardous situation that, if not avoided, **could result** in death or serious injury.

CAUTION

Indicates a hazardous situation that, if not avoided, **could result** in minor or moderate injury.

NOTICE

Indicates possible **material damage** that can be caused to other objects by the inverter.

A note provides information on efficient use of the inverter.

If necessary, the warning labels are also marked with warning symbols indicating the source of the danger.

High electrical voltages or currents

Hot surfaces

Heavy weight

General danger

1.4 Writing and labeling conventions

Some sections in this manual are specially labeled.

Labeling of work instructions

Work instructions that must be performed in a specific sequence are numbered accordingly. Numbered work instructions must **always** be performed in the specified sequence.

1. First step
   → Where necessary, the result of the work step is described here. This is used for checking that the work step has been completed correctly.
2. Second step
3. Third step

☑ Work step is now complete.

If the work instructions consist of just one single step or the work steps can be performed in any desired sequence then the work steps are labeled as follows:

► Step

► Step

Labeling of inverter components

LEDs *ALARM* LED

LED	Meaning
	LED stays on.
	LED flashes.
	LED is off.

2. Basic safety instructions

DANGER

Electric shock
Potentially fatal voltages are present in the inverter during operation. When the inverter is disconnected from all power sources, this voltage remains in the inverter for up to 60 seconds.
You should therefore always carry out the following steps before working on the inverter:

1. Turn both DC disconnectores to the ***OFF*** position.
2. Disconnect the inverter from all AC and DC voltage sources and make sure that none of the connections can be restored accidentally.
3. Wait at least 60 seconds for the internal capacitors to discharge.

DANGER

Electric shock
Potentially fatal voltages are present at the DC connections of the inverter. When light falls on the solar modules, they immediately start to generate electricity. This also happens when light does not fall directly on the solar modules.

- ► Never disconnect the inverter from the solar modules when it is under load.
- ► Turn both DC disconnectores to the ***OFF*** position.
- ► Disconnect the connection to the grid so that the inverter cannot feed energy into the grid.
- ► Disconnect the inverter from all AC and DC voltage sources. Make sure that none of the connections can be restored accidentally.
- ► Ensure that the DC cables cannot be touched accidentally.

DANGER

Electric shock
The inverter has a high leakage current value.

- ► **Always** connect the ground cable first, then the AC and DC cables.

WARNING

Electric shock
The IP65 protection degree is no longer guaranteed when the door is open.

- ► Only open the door when absolutely necessary.
- ► Do not open the door if water or dirt might enter the inverter.
- ► After work is completed, ensure that the door is properly shut and tightened again. Check that the door is properly sealed.

WARNING

Heavy weight
The inverter is heavy.

- ► Lift and carry the inverter with at least 2 people.

WARNING

Hot surfaces
The surface of the inverter can get very hot during operation.

- Always wear safety gloves when touching the inverter.

NOTICE

Use of aluminum cables

- ► Always observe the applicable regulations and rules for the use of aluminum cables. For detailed information, refer to the complete Installation and Operation Manual.

NOTICE

Working in freezing conditions
In frosty conditions, the rubber seal of the front door can freeze to the enclosure, tear when opened and thus become leaky.

- ► Before opening the front door, defrost the rubber seal with some warm air.
- ► Open the front door slowly.

- To comply with IEC 62109-5.3.3 safety requirements and avoid injury or material damage, the inverter must be installed and operated in accordance with the safety and operating instructions set out in this manual. Delta Electronics is not responsible for damage resulting from failure to follow the safety and operating instructions set out in this manual.
- The inverter may only be installed and commissioned by installers who have been trained and approved for the installation and operation of grid-connected solar inverters.
- All repair work on the inverter must be carried out by Delta Electronics. Otherwise the warranty will be void.
- Warning notices, warning symbols and other markings attached to the inverter by Delta Electronics must not be removed.
- To avoid the risk of arcing, do not disconnect cables when the inverter is under load.
- To prevent damage due to lightning strikes, follow the applicable regulations in your country.
- All external connections must be sufficiently sealed in order to ensure an IP65 protection degree. Seal any unused connections with the cover caps supplied.
- The covers inside the inverter do **not** have to be removed for the standard installation. All connections required for the standard installation are also accessible with the covers attached.
- Only equipment in accordance with SELV (EN 60950) may be connected to the RS485 interfaces.

3. Intended purpose

The inverter may be used only for the specified intended purpose.

The intended purpose of the inverter is defined as follows:

- Use in stationary solar systems that are connected to the public grid. For conversion of the DC power that is generated by the solar modules of the solar system into AC power which is fed into the local power grid.
- Use in conformity with the power specifications and environmental conditions specified by the manufacturer.

The following uses are regarded as not for the intended purposes:

- Use in stand-alone mode, i.e. without a connection to the public grid. The inverter has functions that prevent isolated operation.
- Use in mobile solar systems.

4. Product overview

4.1 Scope of delivery

- ► Check the delivery for completeness and all components for damage before starting installation work.
- ► Do not use any damaged components.

► Keep the packaging.

4.1.1 Inverter

Part		Description	Part		Description
Inverter	1		Mounting plate	1	For mounting the inverter
Support bracket for DC cables	6	For supporting the weight of the DC cables	Mounting tool for DC plug	2	For unscrewing the Amphenol H4 DC plugs from the DC connections of the inverter
DC plug for DC+	12	Amphenol H4 DC plug for 4/6 mm² (H4C**F** C4D●MS) 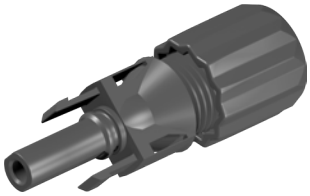	DC plug for DC–	12	Amphenol H4 DC plug for 4/6 mm² (H4C**M** C4D●MS) 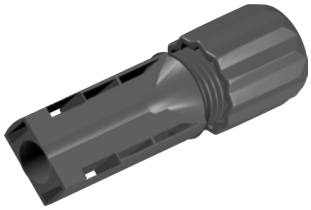
Quick Installation Guide	1		Allen key	1	For releasing the door screws and securing the open door from slamming shut.

4.1.2 Sub-1G antenna

Sub-1G antenna	1		Bracket	1	For mounting the Sub-1G antenna to the inverter.
1 set of mounting screws	3	For screwing the bracket onto the inverter; screws with spring washer and washer 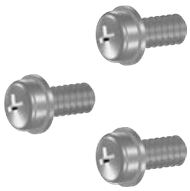			

4.2 Accessories to be ordered separately

Accessories for floor mounting

Feet for ground mounting	2	For screwing the inverter onto the floor 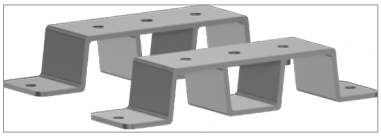	Mounting screws for feet	4	For mounting the feet on the inverter; machine screw with spring washer and washer 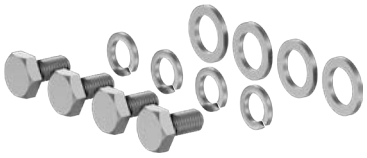

Wi-Fi module

Wi-Fi module	1		Mounting screws	2	Screws with spring washer and washer

4.3 Overview of components and connections

Fig. 4.1: Overview of external components and connections

1	Air outlet
2	Wi-Fi module (optional)
3	DC disconnector 1+2
4	DC connector panel
5	Support brackets for DC cables
6	Right mounting hole
7	Grounding connection
8	Left mounting hole + grounding connection
9	AC cable gland
10	Cable gland for RS485, digital inputs, dry contacts, external power-off
11	Type plate
12	Air inlet with fan module
13	Sub-1G antenna

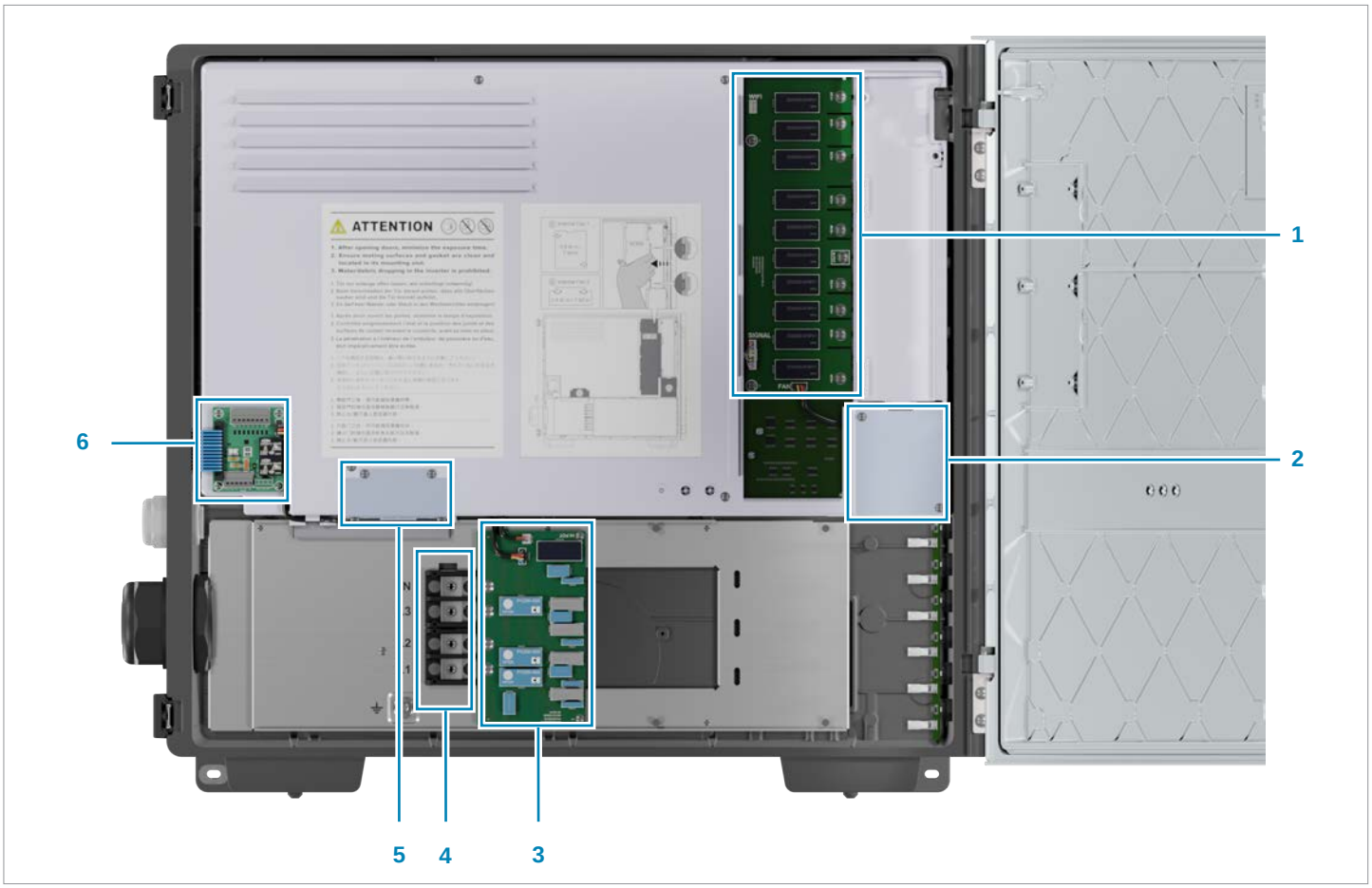

Fig. 4.2: Overview of internal components with protective covers removed

1. Type 2 DC surge protection devices
2. Internal fan 2
3. Type 2 AC surge protection devices
4. AC connection terminals
5. Internal fan 1
6. Connection terminals for RS485, digital inputs, dry contacts and external power-off

4.4 LEDs

GRID	Grid	LED: green
ALARM	Alarm	LED: red / yellow
COMM.	Communication	LED: red / yellow / green

Table 4.1.: Use and color of the LEDs

	LED is off.		
	LED flashes yellow.		LED lights up yellow.
	LED flashes green.		LED lights up green.
	LED flashes red.		LED lights up red.

Table 4.2.: Meaning of the LED symbols used in this manual

GRID	ALARM	Explanation
		Countdown (inverter is starting up).
		The inverter is connected to the grid.
		Error. Power-off via external signal.
		Warning.
		Solar system failure.
		Solar system warning.
		No DC. Also appears when both DC disconnectores are open.
		Updating firmware.
		Standby mode.

Table 4.3.: Meaning of the LED displays on the inverter

4.5 AC-side components

Related topics

"5.4 Planning the grid connection (AC)", page 37
"7.7 Connecting the grid (AC)", page 75

4.5.1 AC cable gland

Fig. 4.3: AC cable feed-through

The AC cable gland consists of several sealing rings for different cable diameters.

4.5.2 AC connection terminals

Fig. 4.4: AC connection terminals

The inverter is suitable for 3-phase grids with/without neutral conductor.

The PE connection is realized as a separate bolt. The M8 nut, spring washer and washer are already mounted in the inverter.

4.5.3 AC Surge Protection Devices

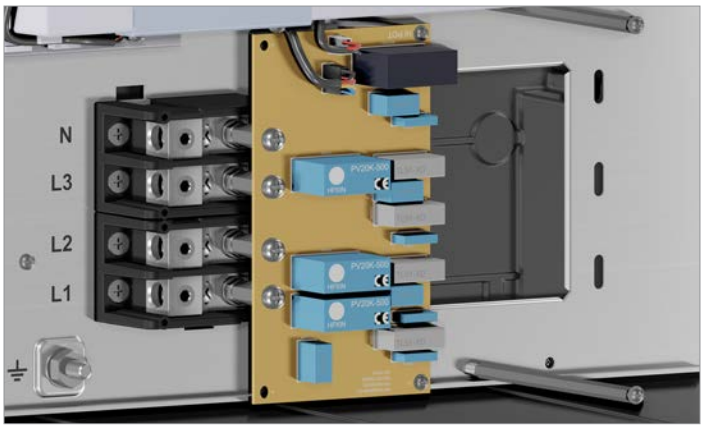

Fig. 4.5: View of type 2 AC surge protection devices with the cover removed

The inverter has replaceable type-2 AC surge protection devices (EN 61463-11) which protect the inverter against excessive voltages. The type-2 AC surge protection devices are replaced as a block.

Type 1+2 combined AC surge protection devices can be ordered as accessories.

Related topics

"11.9 Installing/replacing type 2 combined AC surge protection devices", page 128
"11.8 Installing/replacing type 1+2 combined AC surge protection devices", page 121

4.6 DC-side components

Related topics

"5.5 Planning the connection of the solar modules (DC)", page 41
"7.8 Connecting the solar modules (DC)", page 79

4.6.1 DC connector panel

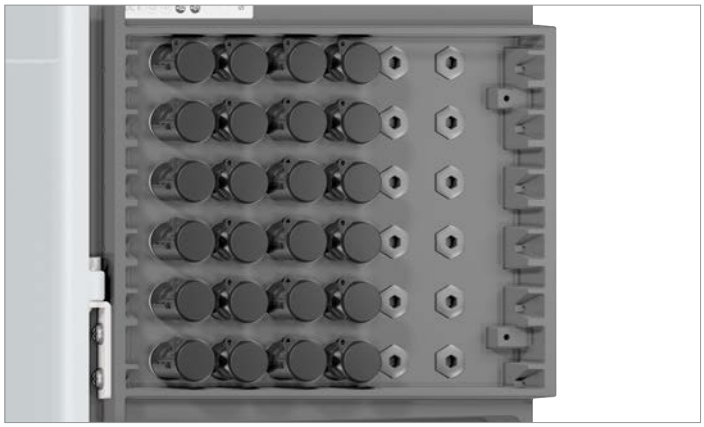

Fig. 4.6: DC connection panel

The DC connector panel has 12 pairs of DC connectors (6 MPP trackers with 2 pairs of DC connectors each).

Plug type:

- DC+: Amphenol H4 for 4/6 mm² (Amphenol part number H4C**F**C4D●MS)
- DC–: Amphenol H4 for 4/6 mm² (Amphenol part number H4C**M**C4D●MS)

12 pairs of DC plugs are supplied in the scope of delivery.

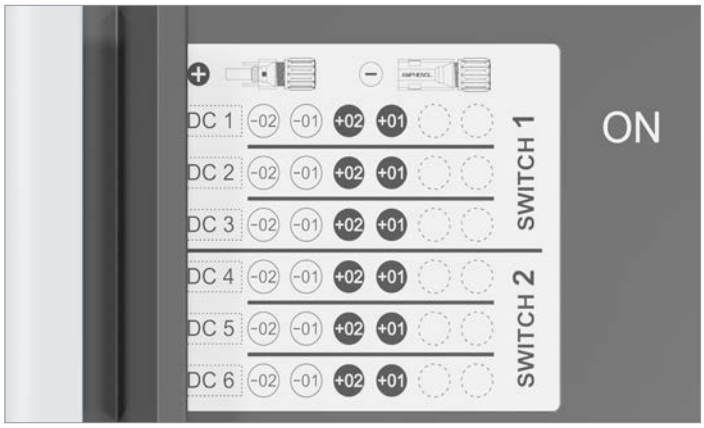

Fig. 4.7: Label showing the assignment of each DC connector

The assignment of the individual DC connectors to the module strings is shown on a label.

4.6.2 DC disconnectors

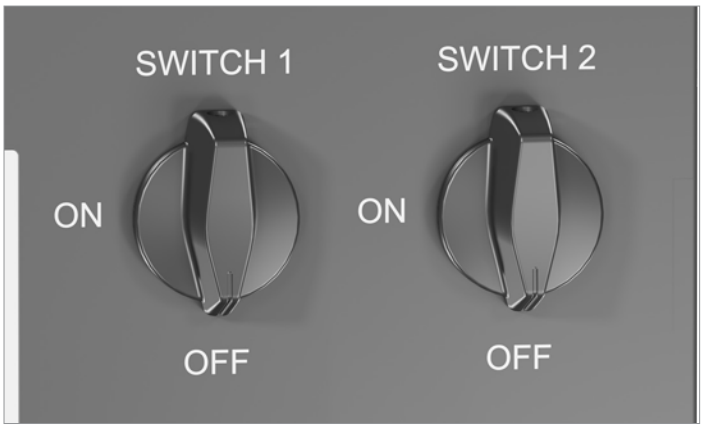

Fig. 4.8: DC disconnectors

The DC disconnectors are marked on the inverter with the words SWITCH 1 and SWITCH 2.

DC disconnector 1 separates the DC strings of MPP trackers 1 to 3.

DC disconnector 2 separates the DC strings of MPP trackers 4 to 6.

Germany: The DC disconnectors meet the requirements of VDE0100-712.

France: The DC disconnectors meet the requirements of UTE 15-712-1.

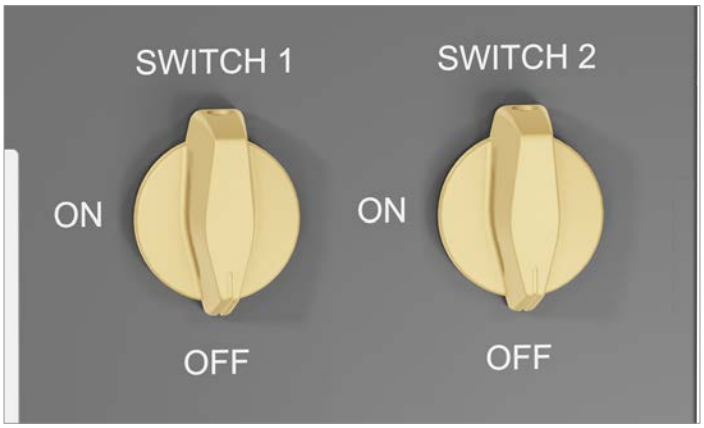

*Fig. 4.9: Both DC disconnectors in the **OFF** position = the connection to the solar modules is disconnected*

The connection between the inverter and the solar modules is **disconnected** when both DC disconnectors are in the ***OFF*** position.

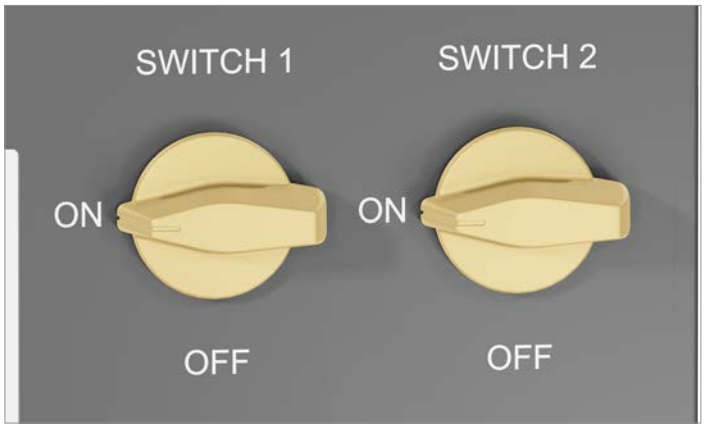

*Fig. 4.10: Both DC disconnectores in the **ON** position = the connection to the solar modules is closed*

The connection between the inverter and the solar modules is**closed** when both DC disconnectores are in the ***ON*** position.

4.6.3 DC Surge Protection Devices

Fig. 4.11: View of the DC surge protection devices with the cover removed

The inverter has replaceable type-2 DC surge protection devices (EN 50539-11) which protect the inverter against excessive voltages. The DC surge protection devices are replaced as a block.

Type 1+2 combined DC surge protection devices can be ordered as accessories.

Related topics

“11.7 Installing/replacing DC surge protection devices”, page 114

4.7 Communication connection

Related topics

"5.7 Planning the device communication and plant monitoring", page 45
"5.8 Grid and system protection", page 50
"6. Planning the Commissioning", page 51
"7.6 Connecting the communication card", page 62

Fig. 4.12: Cable feed-through for the communication cables

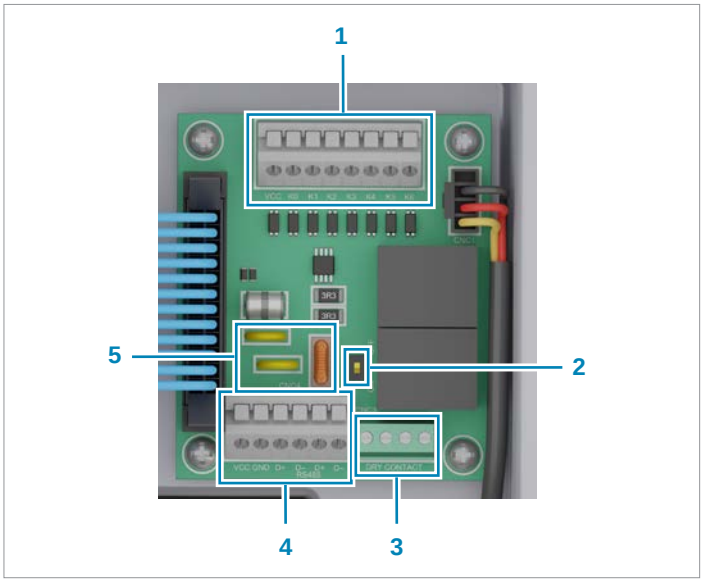

Fig. 4.13: Components of the communication card

1 Digital inputs and external power-off (terminal block)
2 DIP switch for the RS485 termination resistor
3 2 x dry contacts (terminal block)
4 RS485 (terminal block)
5 Protection against electromagnetic interference (EMI)

Connection	Connector type
2 x RS485 (DATA+ and DATA–)	Terminal block
1 x VCC (12 V, 0.5 A)	Terminal block
6 x digital inputs	Terminal block
2 x dry contacts	Terminal block
1 x external power-off (EPO)	Terminal block

Table 4.4.: Connections on the communication card

Cable type	Shielded and twisted pair cable (CAT5 or CAT6)
Cable diameter	7.2 mm
Wire cross section	0.25 ... 1.5 mm^2

Table 4.5.: Specification of the communication cable

4.8 Grounding connection

Related topics

"5.4.6 Planning grounding of the inverter", page 38
"7.4 Grounding the inverter housing", page 57

4.8.1 Grounding the inverter housing

The inverter offers two possibilities for grounding the inverter housing.

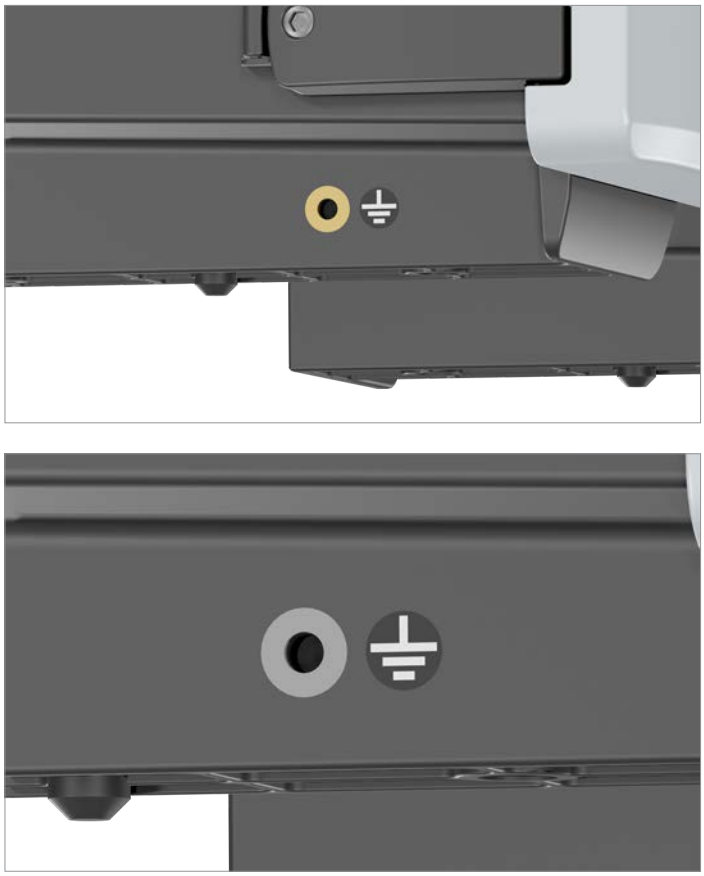

Fig. 4.14: Grounding connection at the left foot of the inverter

Fig. 4.15: Grounding connection at the left mounting hole

To connect the grounding cable to the left foot of the inverter, a cable lug, M6 screw, spring washer and washer are required. A toothed washer is not required.

4.8.2 PE connection

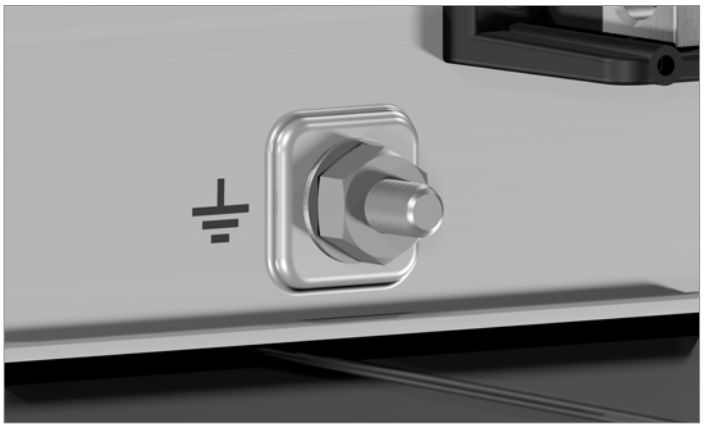

Fig. 4.16: PE connection

The M10 nut, spring washer and washer are already mounted in the inverter. A toothed washer is not required.

4.9 Cooling system

Related topics

"5.1 Installation location", page 29
"11.5 Cleaning/replacing the fan module", page 108
"11.6 Cleaning the air outlets", page 112

4.9.1 Air inlet, air outlet and fan module

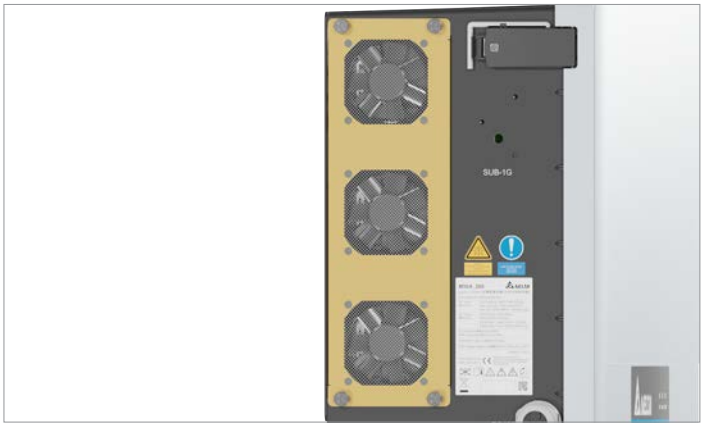

Fig. 4.17: Air inlet with fan module on the left side

Fig. 4.18: Air outlet on the right side

The air for cooling is drawn in through the air inlet on the left side of the inverter. The heated air is released back to the environment through the air outlets on the right side of the inverter.

The fan module can be replaced.

4.9.2 Internal fans

The internal fans circulate the air inside the inverter to prevent heat buildup.

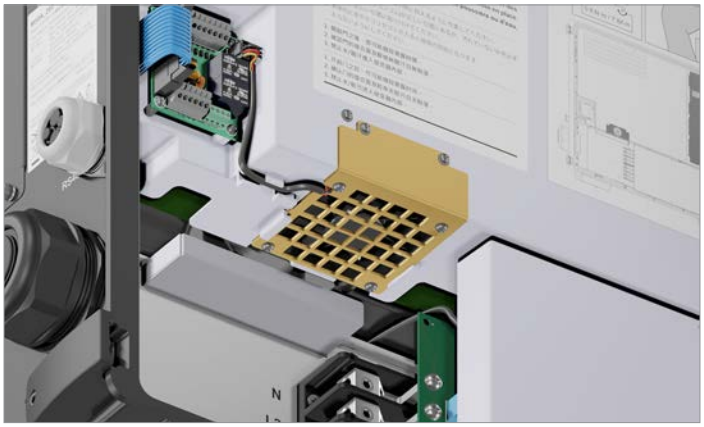

Fig. 4.19: Internal fan 1

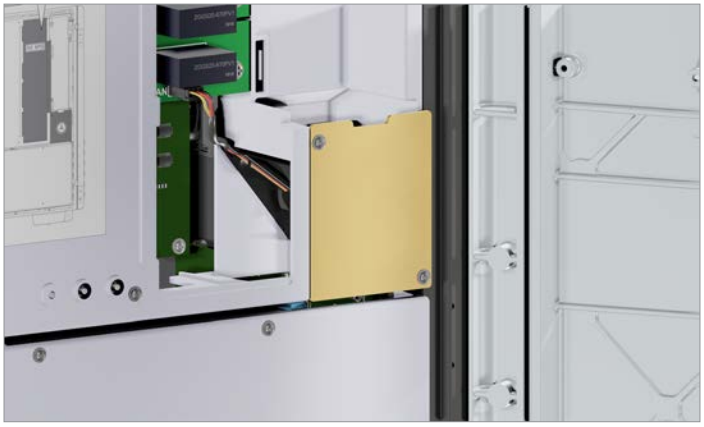

Fig. 4.20: Internal fan 2

Related topics

"11.3 Clean/replace internal fan 1", page 99
"11.4 Clean/replace internal fan 2", page 103

4.9.3 Internal heat sinks

Fig. 4.21: Rear cover plate

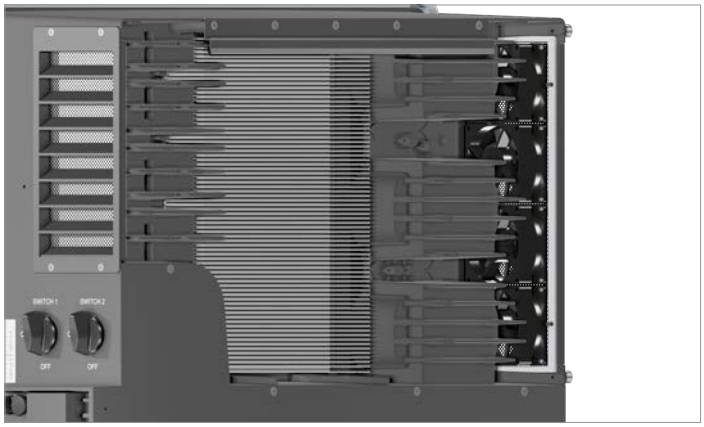

Fig. 4.22: Internal heat sinks with rear cover plate removed

The rear cover plate can be removed to gain access to the internal heat sinks.

4.10 Sub-1G antenna

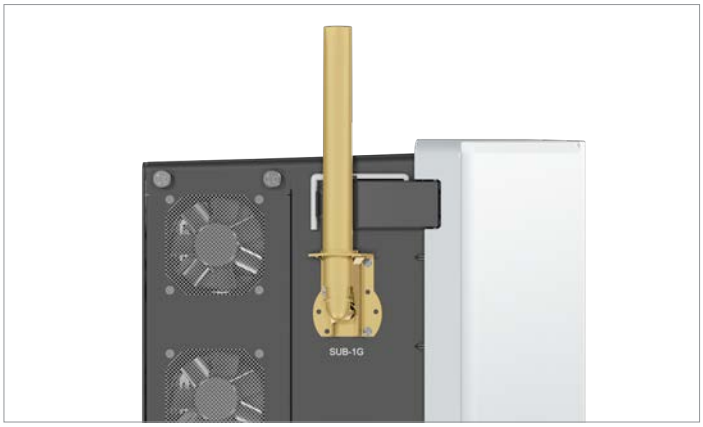

Fig. 4.23: Sub-1G antenna

Sub-1G antenna and mounting materials are included in the scope of delivery.

Related topics

"6. Planning the Commissioning", page 51
"11.10 Installing/replacing the Sub-1G antenna", page 134

4.11 Wi-Fi module

Fig. 4.24: Position of the Wi-Fi module

The Wi-Fi module is an accessory that must be ordered separately.

Related topics

"6. Planning the Commissioning", page 51
"11.11 Installing/replacing the Wi-Fi module", page 138

4.12 Type plate and markings

Fig. 4.25: Type plate and markings

Information on the type plate	Meaning
M50A_260	Delta model name
P/N: RPI503M260000	Delta part number
DC INPUT	DC Input
200–1000 Vdc	DC input voltage range
MPPT 460-800Vdc	MPP input voltage range with full power (with symmetrical load)
Max. total Idc: 132A (26A/MPPT)	Maximum DC input current per MPP tracker
1000 V DC max	Maximum DC input voltage
MAX Isc: 50A*6 MPPT	Maximum DC short-circuit current per MPP tracker
AC OUTPUT	AC Output
220/380, 230/400 Vac	AC nominal voltage
3P3W or 3P4W	The inverter can be connected to 3-phase grids without neutral conductors (3P3W, 3 phases + PE) and 3-phase grids with neutral conductors (3P4W, 3 phases + N + PE).
50/60 Hz	AC nominal frequency
111.6A max	Maximum AC current
cosφ 0.8ind~0.8cap	Setting range of the power factor cos φ
70kW/70kVA nom	Nominal active power/reactive power
77kW/77kVA max	Maximum active power/reactive power
IP65 (Electronics)	Protection class for the electronics as per EN 60529
Protective Class: I	Safety class as per EN 61140
Over Voltage Category: AC: III / DC: II	Overvoltage category for AC and DC as per EN 50539-11
Made in China	The device was made in China.
VDE-AR-N 4105	The inverter fulfills the requirements of VDE-AR-N 4105.
VDE-AR-N 4110	The inverter fulfills the requirements of VDE-AR-N 4110.
CE	CE mark. By applying this mark, Delta declares that the inverter satisfies the provisions of the applicable EU directives.

4 Product overview

Type plate and markings

Symbols on the type label	Meaning
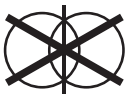	This inverter is not separated from the grid by a transformer.
	Before working on the inverter, read the supplied manual and follow the instructions provided.
	The inverter housing can become very hot during operation.
	The inverter housing must be grounded if this is required by local regulations.
60 seconds	**Risk of death due to electric shock** Potentially fatal voltage is present inside the inverter during operation and this voltage remains present for up to 60 seconds after disconnection from the power supply.
	WEEE mark The inverter must not be disposed of as standard household waste, but in accordance with the applicable electronic waste disposal regulations of your country or region.

For France

Warning notice	Description
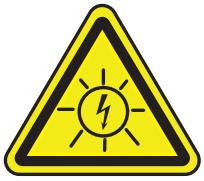 Attention Présence de deux sources de tension - Réseau de distribution - Panneaux photovoltaiques	**For France: Warning notice according to UTE 15712-1** Attention Présence de deux sources de tension - Réseau de distribution - Panneaux photovoltaiques
Isoler les deux sources avant toute intervention	**For France: Warning notice according to UTE 15712-1** Isoler les deux sources avant toute intervention

5. Planning the installation

This chapter describes only the **planning** of the installation work. The **execution**of the installation work and the associated dangers are described in “7. Installation”, page 52.

5.1 Installation location

Related topics

“7.3 Mounting the inverter”, page 54

5.1.1 Requirements for the wall, ground and mounting system

- ► The inverter can be suspended or mounted in a standing position. Mounting feet are available for floor mounting and must be ordered separately.
- ► The inverter is heavy. The wall, ground and mounting system must be able to bear the heavy weight of the inverter.
- ► Always use the mounting plate supplied with the inverter when mounted in a suspended position.
- ► Use mounting materials (dowels, screws etc.) that are suitable for the wall or the mounting system as well as the heavy weight of the inverter.
- ► Mount the inverter on a vibration-free wall to avoid disruptions.
- ► When using the inverter in residential areas or in buildings with animals, possible noise emissions can be disturbing. Therefore, choose the installation location carefully.
- ► Mount the inverter on a fireproof wall.

Special notes on ground mounting

In principle, the inverter can be mounted directly onto the ground or directly onto the roof in the case of roof systems.

However, if there is a risk of flooding (for example in heavy rain) or snow drifts, you should place the inverter in an elevated position.

For example, if there is a circumferential boundary wall on the roof, it can be used for installation.

Fig. 5.1 Shows example use of mounting brackets so that the inverter is positioned off the ground. The cable duct is located behind the inverter.

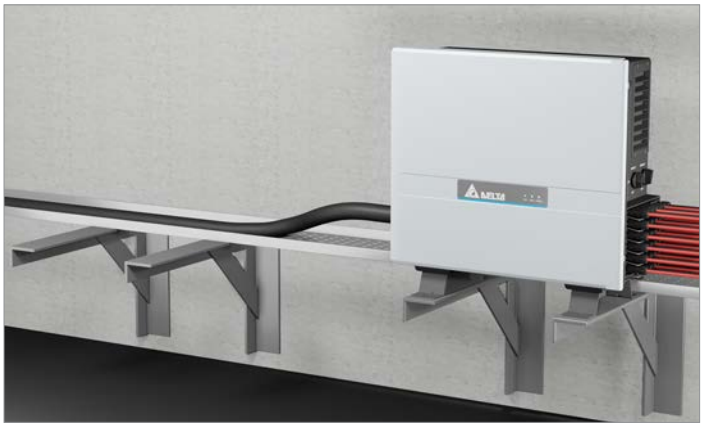

Fig. 5.1: Standing installation with clearance from the ground

5.1.2 Installation height

► Mount the inverter so that the LEDs are always visible.

5.1.3 Installation position

Fig. 5.2: Installation position

► Mount the inverter vertically.

5.1.4 Outdoor Installations

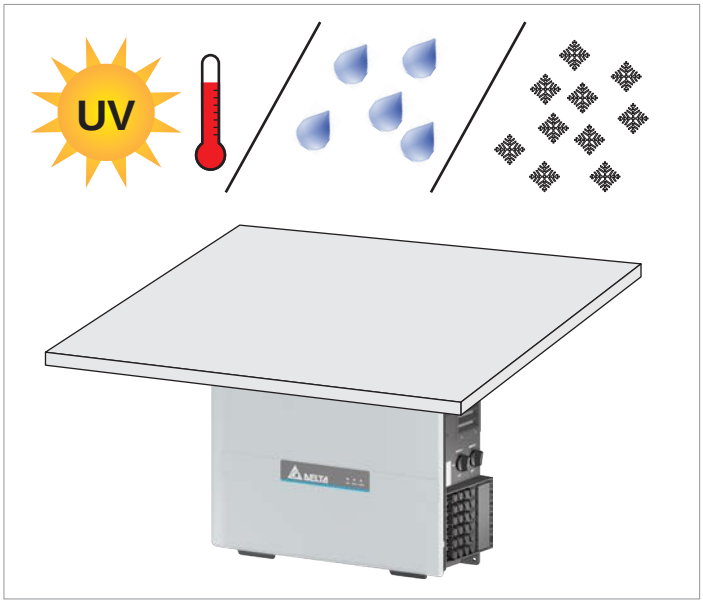

Fig. 5.3: For outdoor installations, protect the inverter from direct sun, UV radiation, rain and snow

The inverter has a protection degree of IP65 and can be installed indoors and outdoors. Despite this, the inverter should be protected by a roof against direct sun, UV radiation, rain and snow.

For example, the power of the inverter will be reduced if it is too heavily heated by solar radiation. This is normal operating behavior for the inverter and is necessary to protect the internal electronics.

5.1.5 Lifting and Transporting the Inverter

► The inverter must be lifted and carried by at least two people.

5.1.6 Installation clearances and air circulation

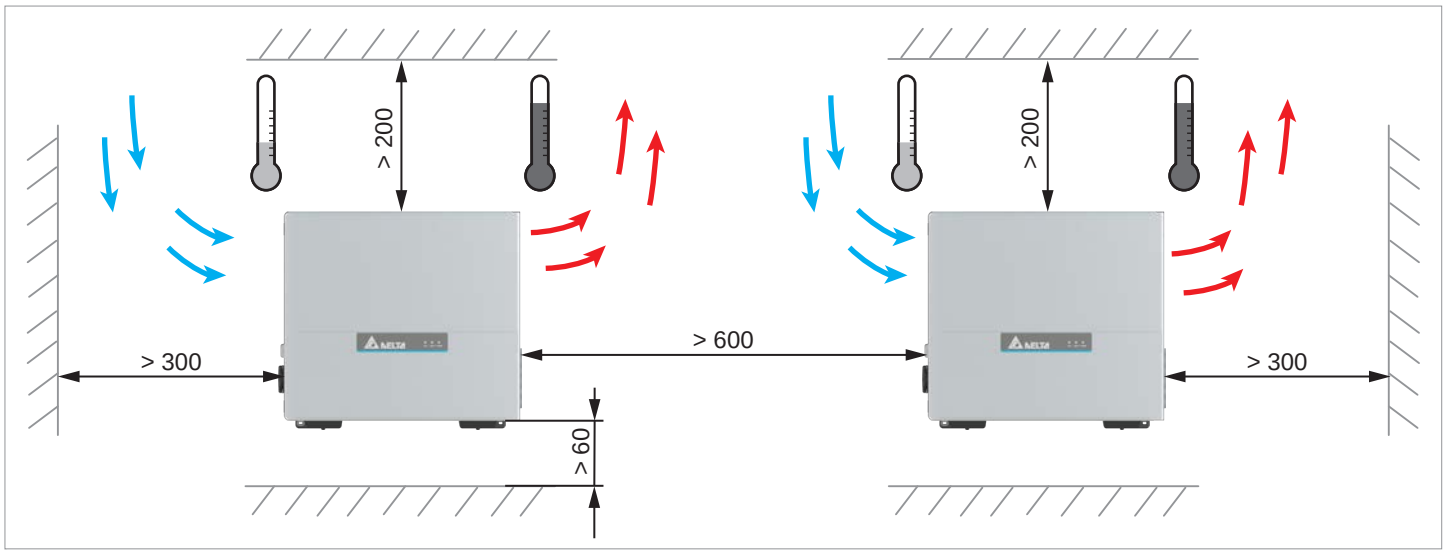

Fig. 5.4: Mounting distances and air circulation, variant 1 (in mm)

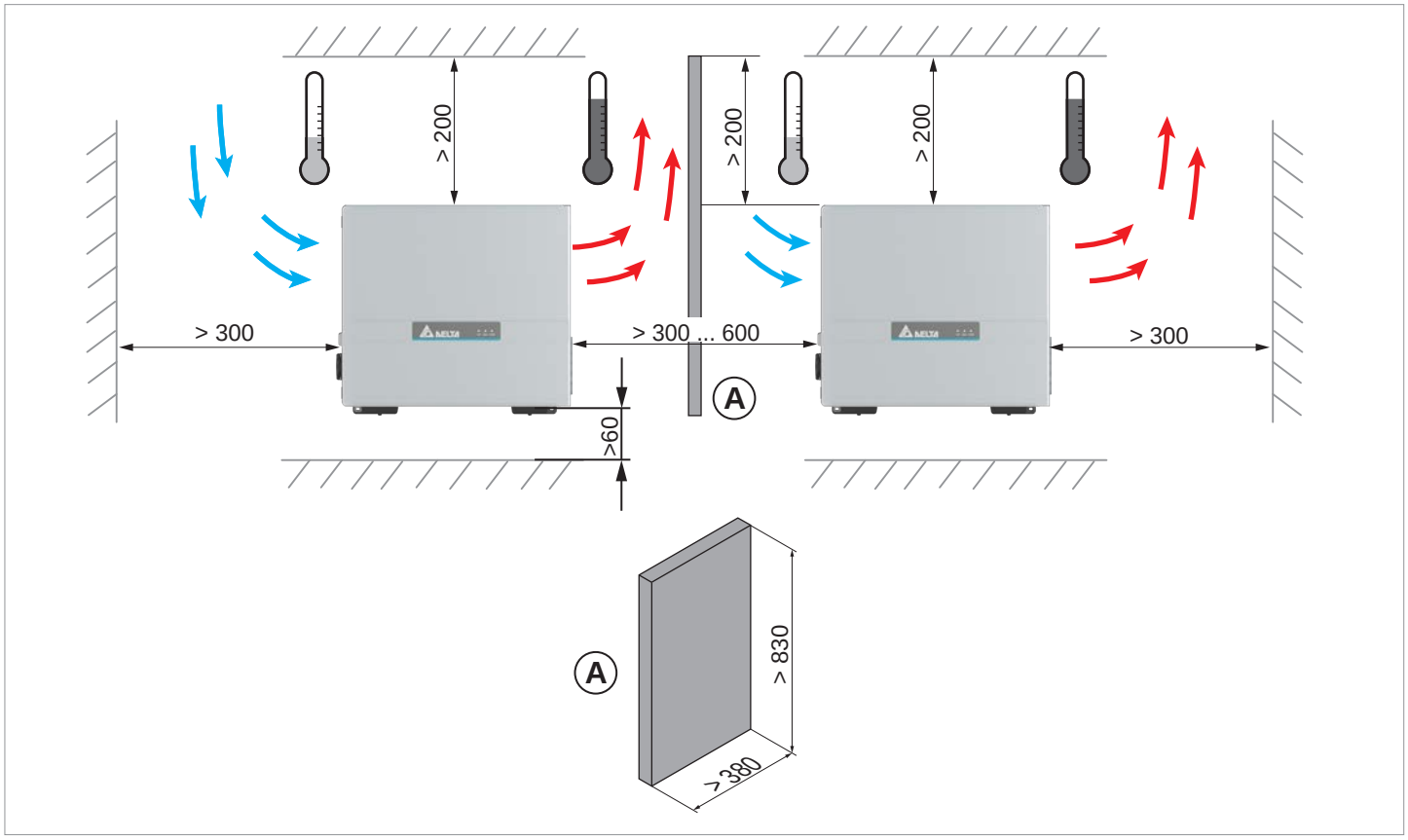

Fig. 5.5: Mounting distances and air circulation, variant 2 (in mm)

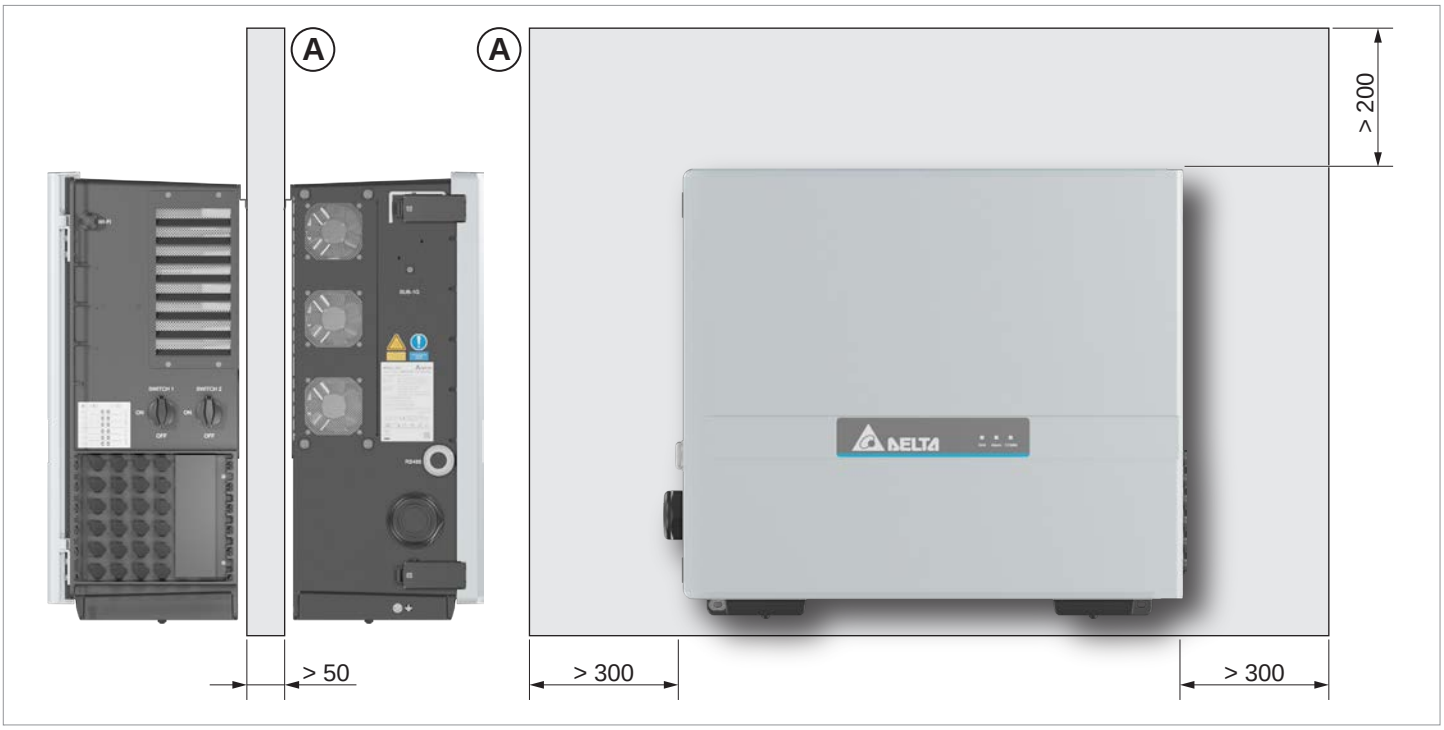

Fig. 5.6: Mounting distances and air circulation, variant 3 (in mm)

- ► Ensure sufficient air circulation. There must not be heat buildup around the inverter. For installation clearances of 30 to 60 cm between two inverters, install a separation plate (A) between the inverters. This separation plate is designed to prevent the right-hand inverter from sucking in the warm air of the left-hand inverter. No separation plate is required for clearances greater than 60 cm.
- ► Observe *Operating temperature range without derating* the *Total operating temperature range* (see "14. Technical Data", page 159).

  When the *operating temperature range without derating* is exceeded, the inverter reduces the AC power fed into the grid.

  When the *Total operating temperature range* is exceeded, the inverter stops feeding AC power into the grid.

  This is normal operating behavior for the inverter and is necessary to protect the internal electronics.
- ► Position multiple inverters so that they do not heat each other up.
- ► Observe the minimum bend radius of the cables used (especially the AC cable)!
- ► Ensure the accessibility of the side components (air filters, fan module, AC cable gland, DC connector panel, etc.) for maintenance and repair work.
- ► Allow space to the front to open the door.
- ► In areas with many trees or fields, pollen and other parts of plants can clog the air inlets and air outlets, obstructing the air flow.

  If there is a loss of performance during operation, clogged air filters may be a cause (see chapter "11. Replacing or cleaning components, installing accessories", page 96).

5.2 Characteristic curves

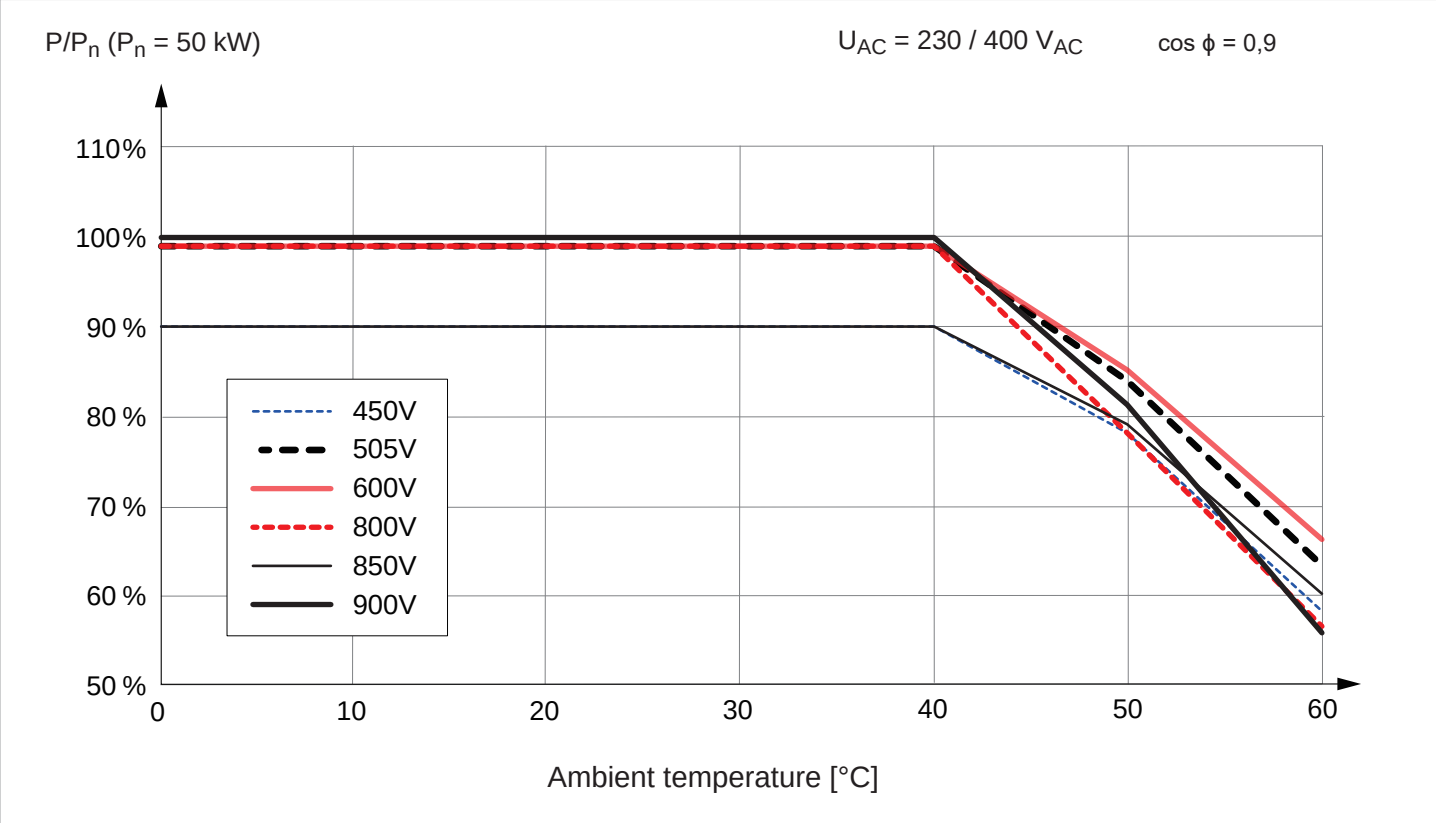

Fig. 5.7: Characteristic curve "Active power control depending on the ambient temperature, cos φ = 0.90, AC voltage =230/400 V"

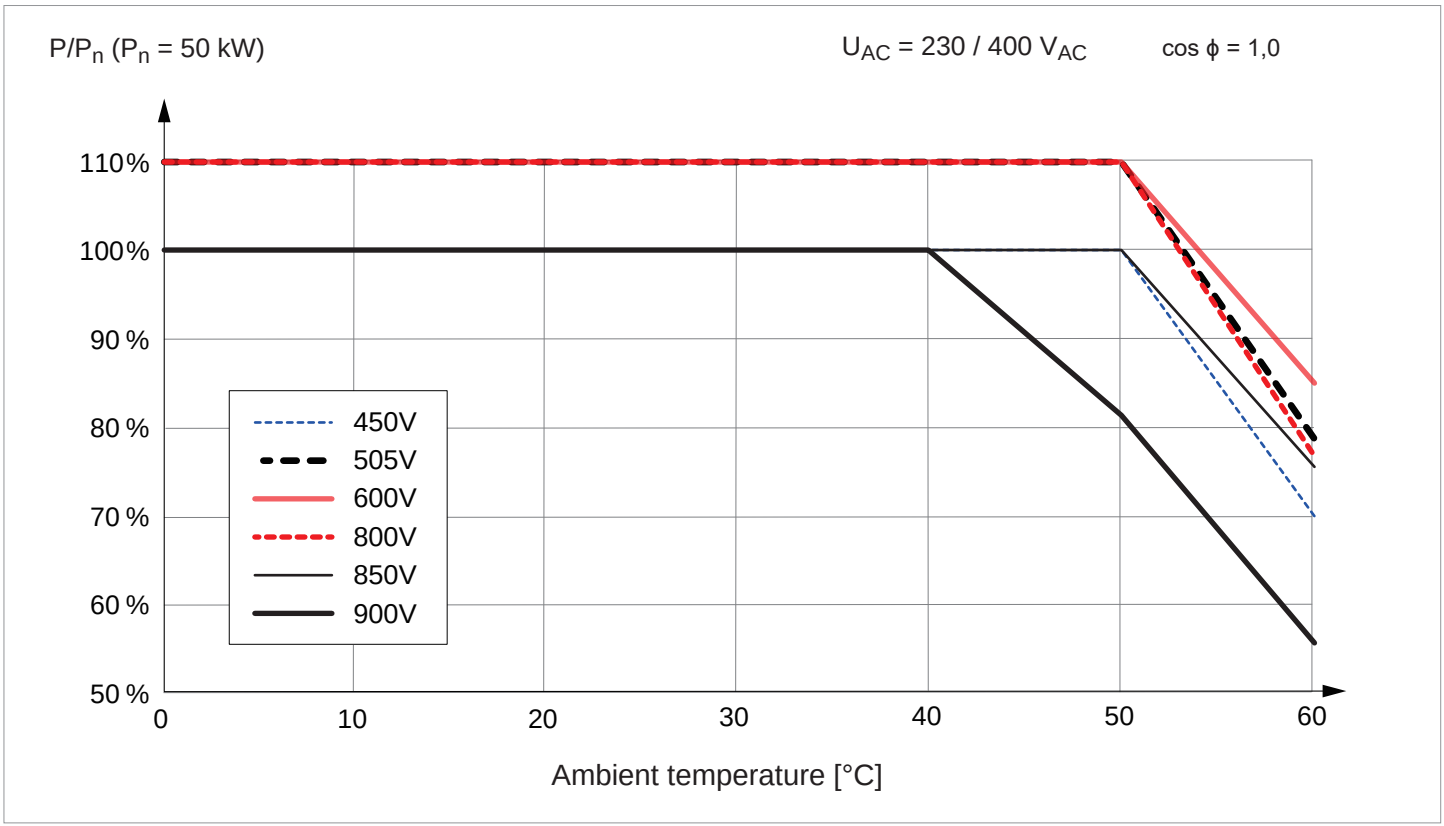

Fig. 5.8: Characteristic curve "Active power control depending on the ambient temperature, cos φ = 1.0, AC voltage =230/400 V"

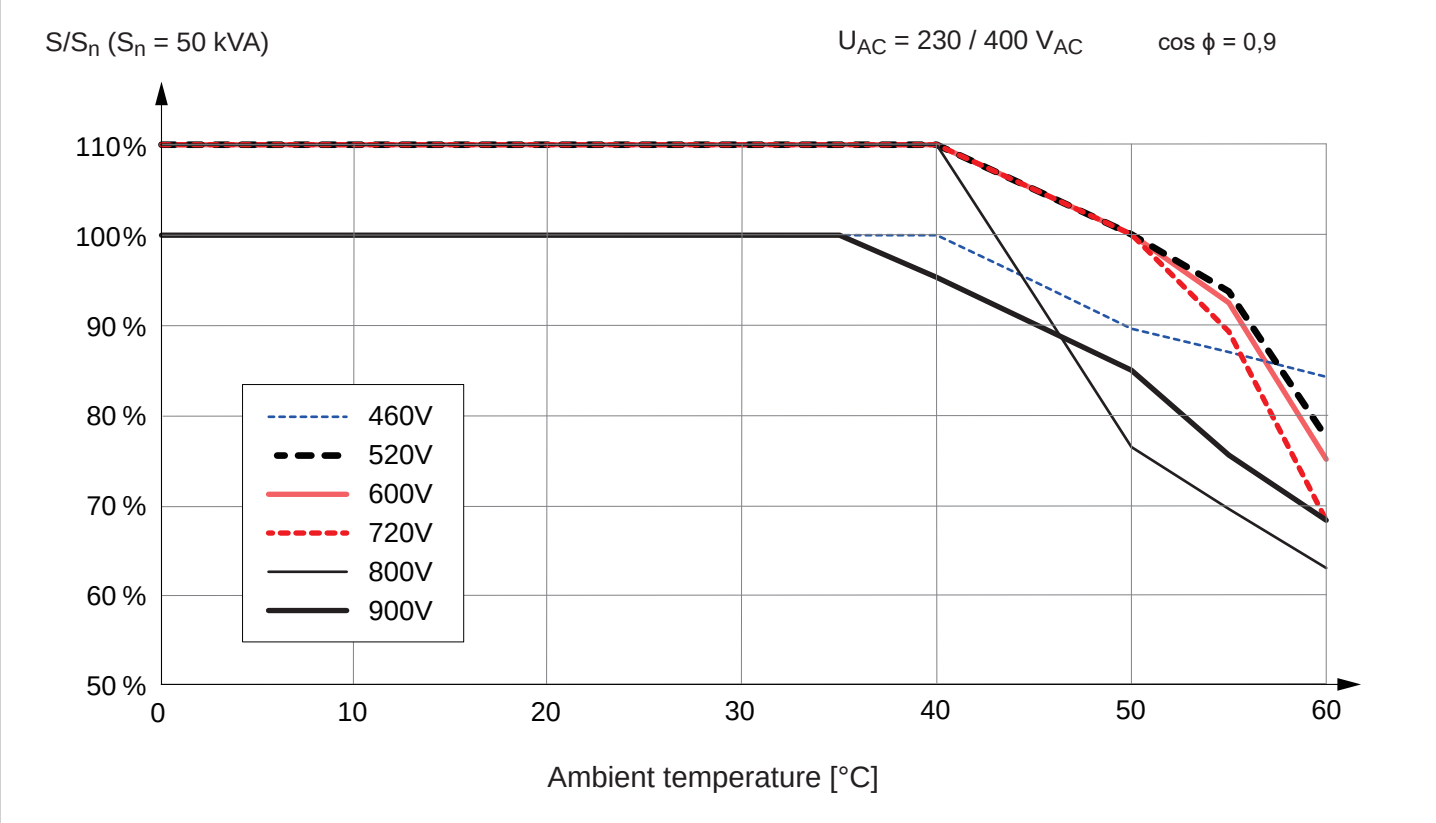

Fig. 5.9: Characteristic curve "Apparent power control depending on the ambient temperature, cos φ = 0.90, AC voltage 230/400 V"

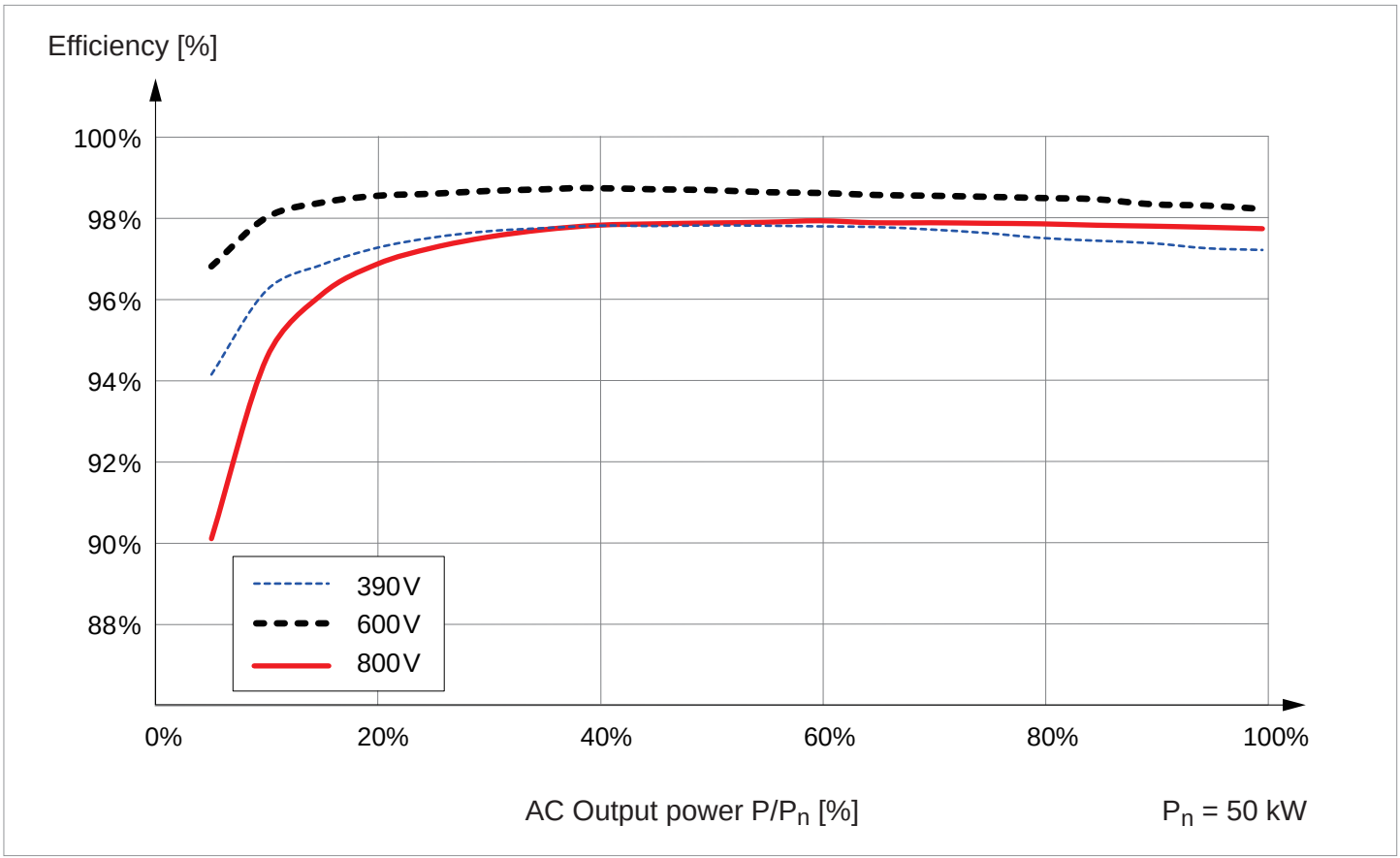

Fig. 5.10: Efficiency characteristic curve; AC voltage = 400 V_{AC}

5.3 Dimensions

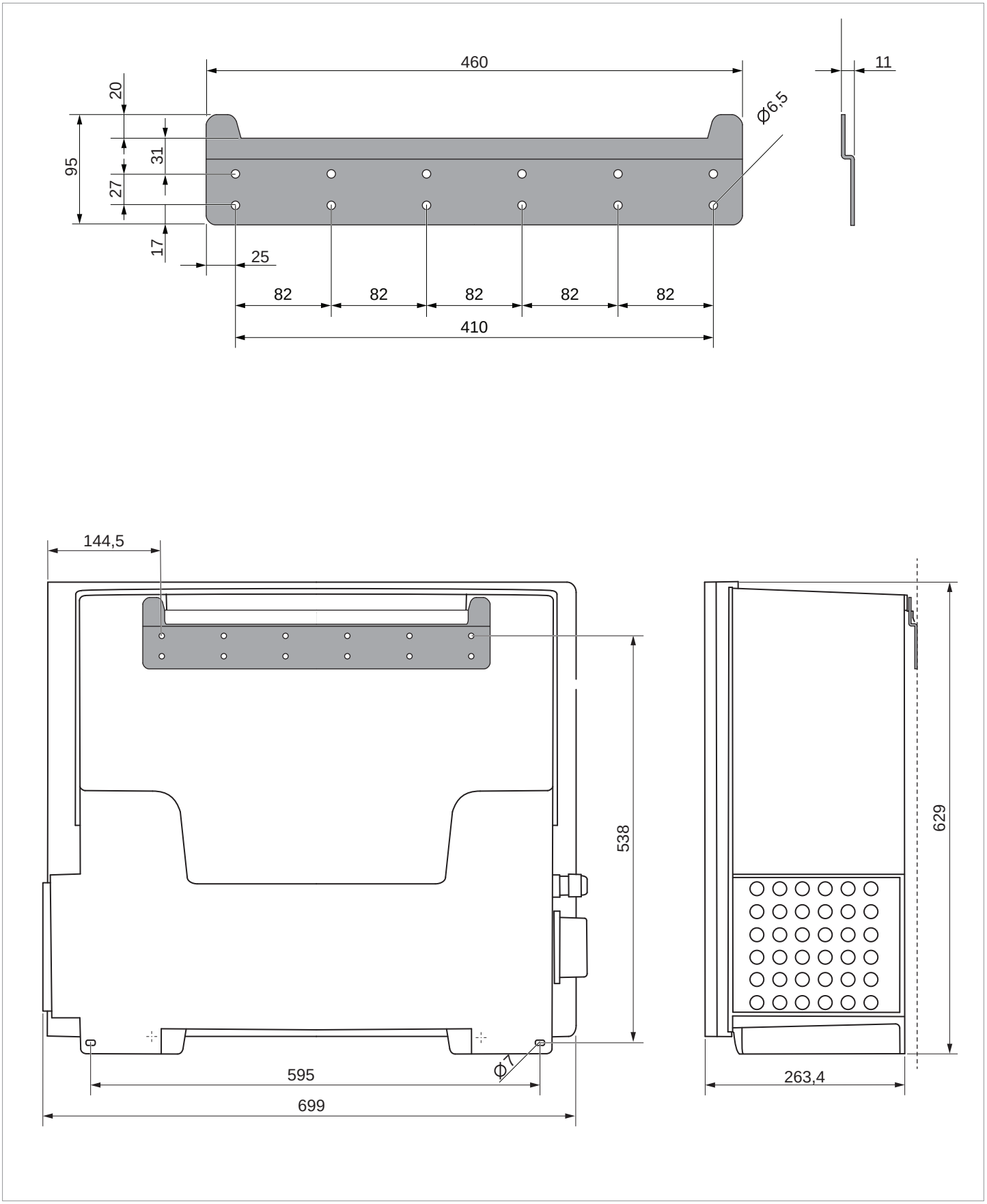

Fig. 5.11: Inverter with mounting plate, dimensions without antennae (in mm)

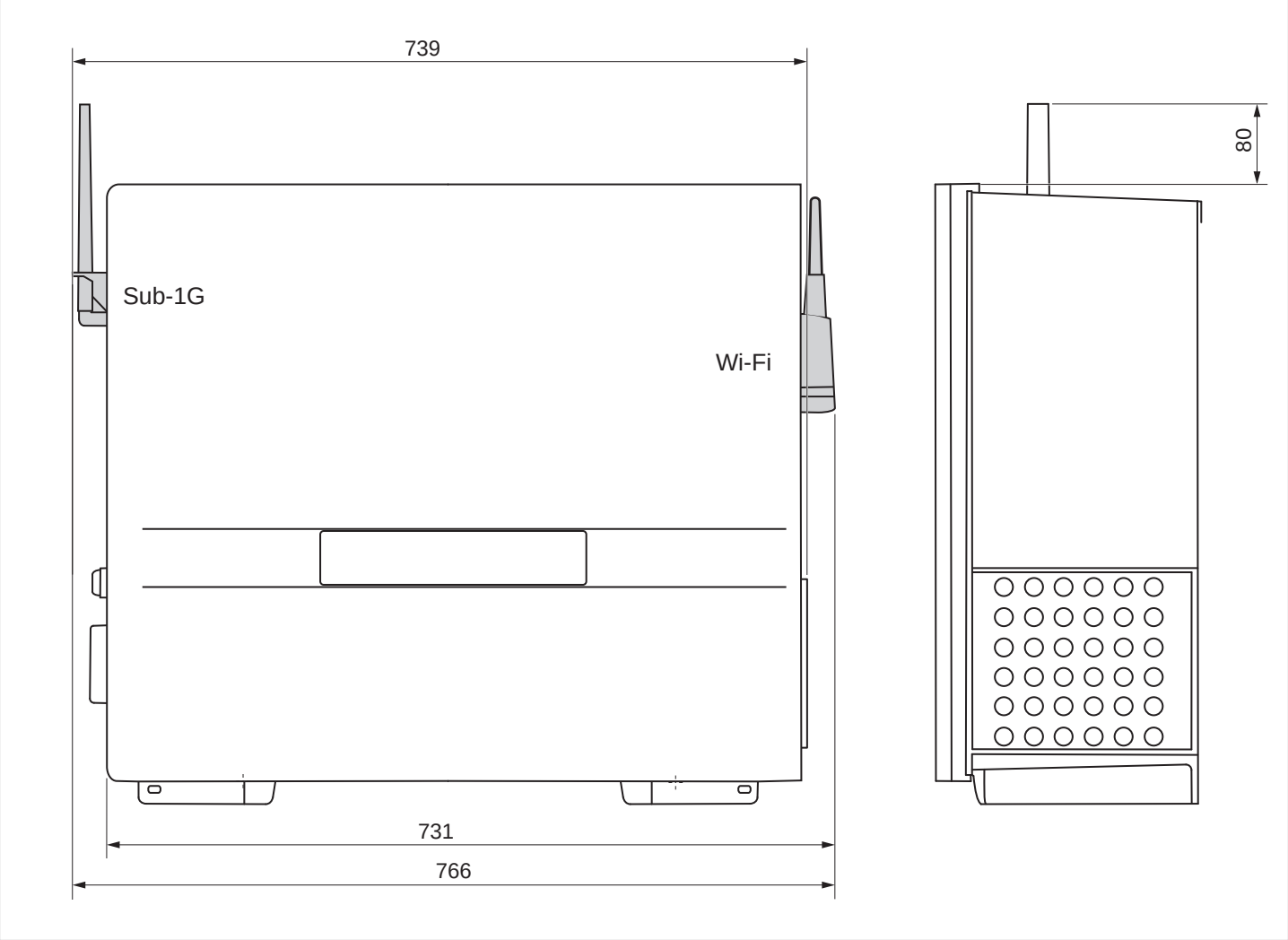

Fig. 5.12: Inverter, dimensions with antennae (in mm)

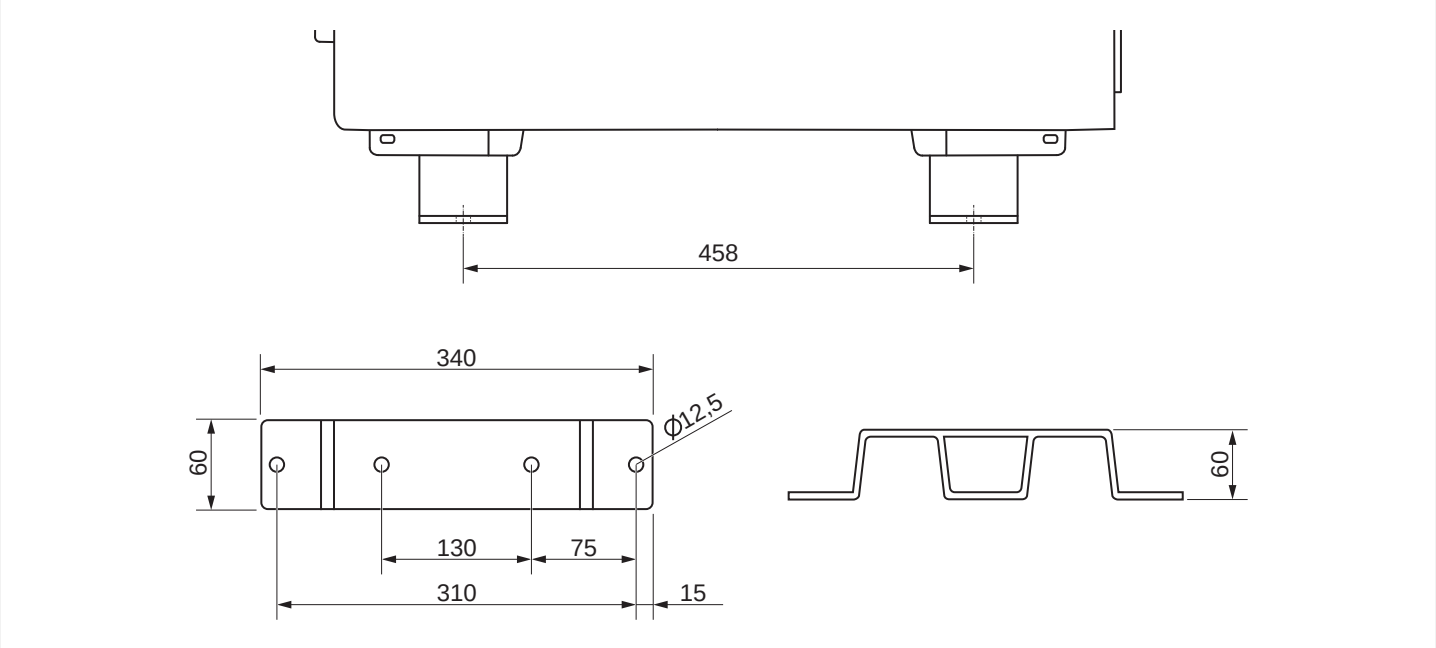

Fig. 5.13: Feet for floor mounting. Dimensions (in mm)

5.4 Planning the grid connection (AC)

Related topics

"7.7 Connecting the grid (AC)", page 75

5.4.1 Important safety instructions

- ► Always follow the specific regulations of your country or region.
- ► Always follow the specific regulations of your energy provider.
- ► Install all the stipulated safety and protective devices (such as automatic circuit breakers and/or surge protection devices).
- ► Protect the inverter with a suitable upstream circuit breaker:

Upstream circuit breaker	125 A recommended

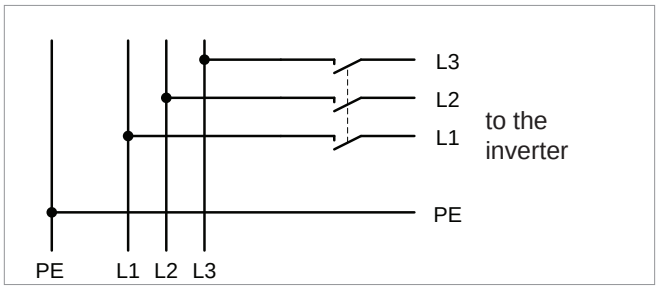

- ► Selection of the protective devices for the grid cables to the transformer of the grid feed-in point: Always take into account the impedance between the PE of the inverter and the system and/or operational ground of the distribution network. This applies in particular for IT networks.

5.4.2 Residual current circuit breaker

Due to its design, the inverter cannot supply the grid with DC residual current. This means that the inverter meets the requirements of DIN VDE 0100-712.

Possible error events were assessed by Delta in accordance with the current installation standards. The assessments showed that no hazards arise from operating the inverter in combination with an upstream, type A residual current circuit breaker (FI circuit breaker, RCD). There is no need to use a type B residual current circuit breaker.

Minimum tripping current of the type A residual current circuit breaker	≥300 mA

The required tripping current of the residual current circuit breaker depends first and foremost on the quality of the solar modules, the size of the PV system, and the ambient conditions (e.g. humidity). The tripping current must not, however, be less than the specified minimum tripping current.

5.4.3 Integrated residual current monitoring unit

The integrated universal current-sensitive residual current monitoring unit (RCMU) is certified in accordance with VDE 0126 1-1:2013-08 §6.6.2.

5.4.4 AC Surge Protection Devices

The inverter is equipped with type-2 AC surge protection devices. Replacements can be ordered from Delta Electronics.

Alternatively, Delta Electronics can order combined type 1+2 AC surge protection devices.

5.4.5 Permissible grounding systems

Grounding system	TN-S	TN-C	TN-C-S	TT	IT
Allowed	Yes	Yes	Yes	Yes	Yes

5.4.6 Planning grounding of the inverter

WARNING

High current

- ► Always observe the local regulations relating to grounding cable requirements.
- ► To increase the safety of the system, always use the grounding screw to ground the inverter housing even when this is not required by the local regulations.
- ► Always ground the inverter housing **before** connecting the inverter to the grid and solar modules.
- ► The grounding cable cross-section must be at least 6 mm².

Grounding the inverter housing

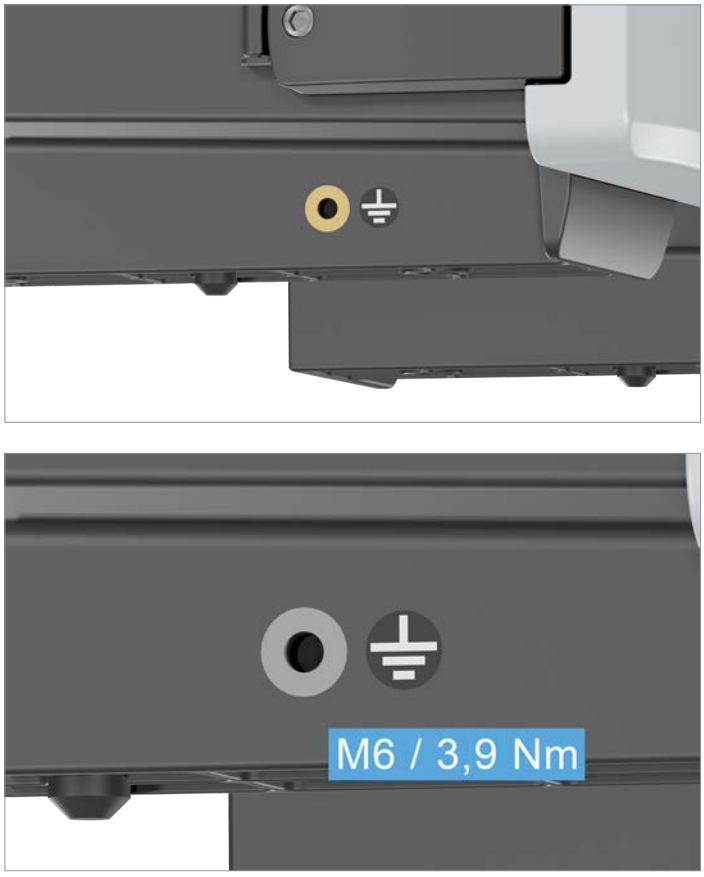

Fig. 5.14: Grounding screw on the left foot of the inverter

Fig. 5.15: Grounding connection at the left mounting hole

PE screw

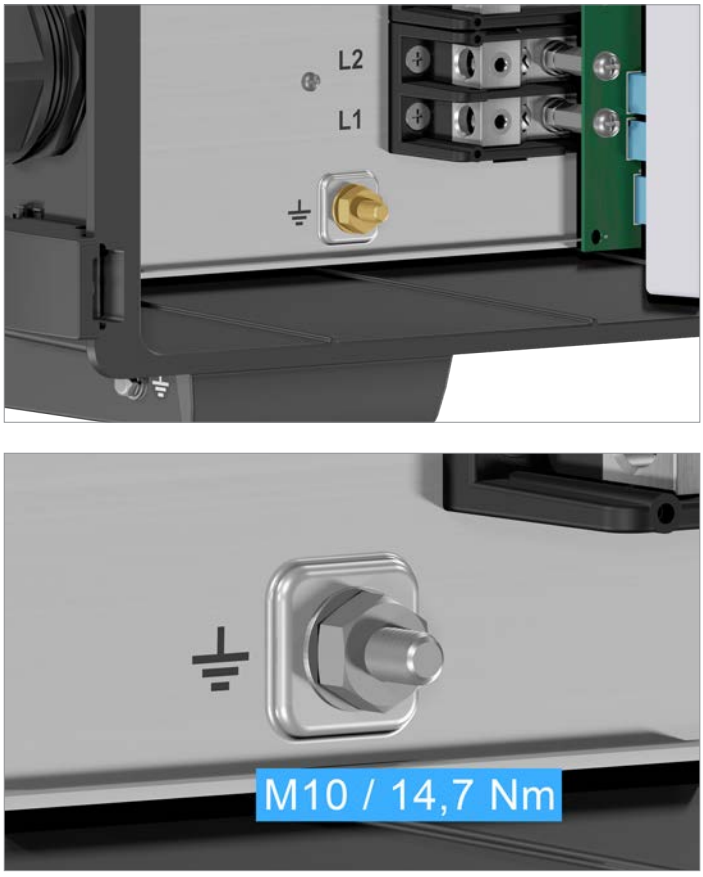

Fig. 5.16: PE connection

5.4.7 Permissible grid voltages

3P3W	Voltage Range	3P4W	Voltage Range
L1-L2	400 V_{AC} -20%/+30%	L1-N	230 V_{AC} -20%/+30%
L1-L3	400 V_{AC} -20%/+30%	L2-N	230 V_{AC} -20%/+30%
L2-L3	400 V_{AC} -20%/+30%	L3-N	230 V_{AC} -20%/+30%

5.4.8 Selecting the AC cable

5.4.8.1 Technical properties of the AC terminal block

Connection type	Screws with hexagon socket head
Rated current I_N	96 A
Rated voltage U_N	1000 V
Type of attachment	• 4.5 mm hexagon socket (L1, L2, L3, N) • M8 nut (PE)
Tightening torque	• 12.4 Nm (L1, L2, L3, N) • 14.7 Nm (PE)

Table 5.1.: Technical specification for the AC terminal block

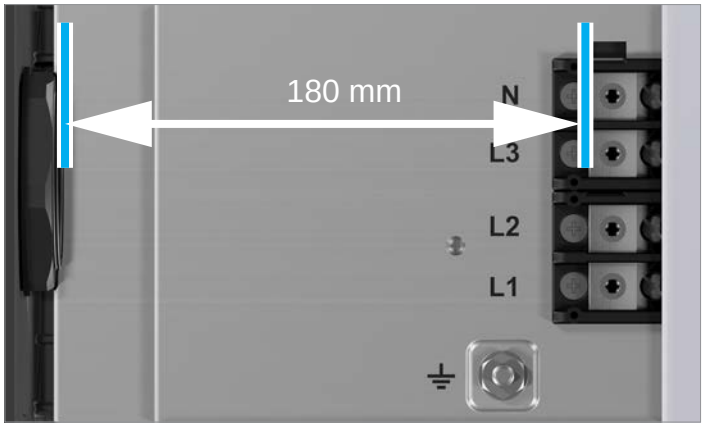

Fig. 5.17: Free space for wiring on the AC terminal block

5.4.8.2 Notes on calculating the cable cross-section

► Consider the following factors when calculating the cable cross-section:
  – Cable material
  – Temperature conditions
  – Cable length
  – Installation type
  – Voltage drop
  – Loss of power in the cable

► Always follow the IEC 60364-5-52 requirements and your country-specific installation instructions.

► France: Follow the installation instructions of UTE 15-712-1. This standard contains the requirements for minimum cable diameters and for avoiding overheating due to high currents.

► Germany: Follow the installation instructions of VDE 0100-712. This standard contains the requirements for minimum cable diameters and for avoiding overheating due to high currents.

5.4.8.3 Specifications for copper AC cables

Min./max. Cable diameter	21,9 to 44,7 mm
Min./max. Wire cross section	
Without wire end sleeve	
• Rigid cable	25 to 60 mm^2
• Multi-wire cable	25 to 60 mm^2
With wire end sleeve	
• Flexible cable	25 to 60 mm^2

Table 5.2.: Specifications for copper AC cables

5.4.8.4 Specifications for aluminum AC cables

Min./max. Cable diameter	21,9 to 44,7 mm
Min./max. Wire cross section	
Without wire end sleeve	
• round, single-wire (rs)	35 to 60 mm^2
• round, multi-wire (rm)	35 to 60 mm^2
• sector-shaped (ss) [1)]	35 to 60 mm^2

1) Observe the installation instructions for the use of sector-shaped aluminum cables (see section 5.4.8.7, p. 40)

Table 5.3.: Specifications for aluminum AC cables

5.4.8.5 Stripping length

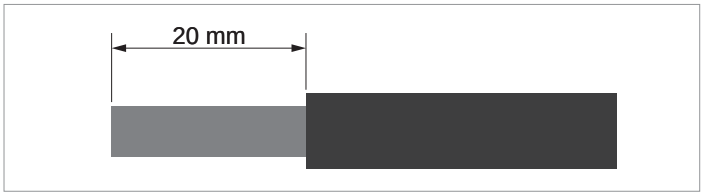

Fig. 5.18: Stripping length for AC cables

5.4.8.6 Handling aluminum conductors during installation work

► The special properties of aluminum must be taken into consideration when using aluminum conductors:
  – Aluminum "flows," i.e. it gives way under pressure.
  – A thin non-conductive oxide layer forms within a few minutes on de-insulation, which increases the contact resistance between the conductor and clamping point.
  – The specific conductivity and hence the current carrying capacity is approximately one third less than that of copper.

NOTICE

To ensure a safe and reliable contact with aluminum conductors, **always** perform the following work steps:

- ► Keep the installation location as free as possible from moisture or corrosive atmospheres.
- ► Connect the aluminum cables quickly.
- ► Clean the stripped end of the aluminum conductor mechanically (for example, using a knife blade to scrape off the oxide layer), then immediately dip the aluminum conductor into acid-fee and alkaline-free (= neutral) Vaseline and straight away insert it into the Al-Cu compression joint.

5.4.8.7 Instructions for the use of sector-shaped aluminum cables

When using sector-shaped aluminum cables without Al-Cu compression joints, insert each cable into the clamping point as shown in the picture.

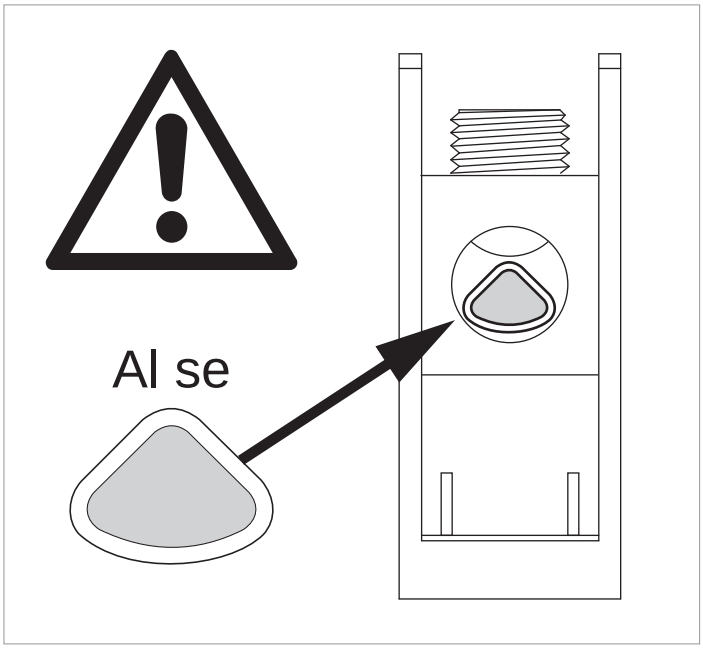

Fig. 5.19: Correct position of sector-shaped aluminum cables (1)

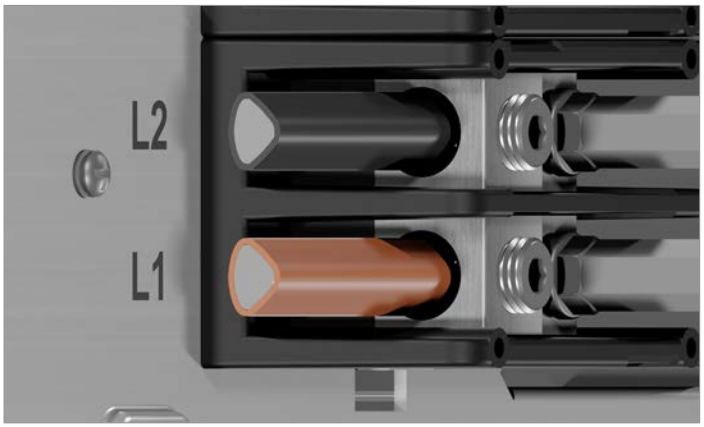

Fig. 5.20: Correct position of sector-shaped aluminum cables (2)

When using sector-shaped aluminum cables with Al-Cu compression joints (e.g. from Klauke, Elpress or Mecatraction), observe the following instructions.

- ► Select compression joints suitable for the type of cable that is used.
- ► Comply with the installation instructions issued by the manufacturer of the compression joints.
- ► Always use heat-shrink sleeving.
- ► Secure the cables with an external strain relief element.

Fig. 5.21: Al-Cu compression joint and heat-shrink sleeving for sector-shaped aluminum cables

5.4.9 Special tools required

Use an insulated torque wrench.

Fig. 5.22: Use an insulated torque spanner for an AC terminal block

5.5 Planning the connection of the solar modules (DC)

Related topics

"7.8 Connecting the solar modules (DC)", page 79

5.5.1 Safety instructions

DANGER

Electric shock
Potentially fatal voltages are present at the DC connections of the inverter. When light falls on the solar modules, they immediately start to generate electricity. This also happens when light does not fall directly on the solar modules.

- ► Never disconnect the inverter from the solar modules when it is under load.
- ► Turn both DC disconnectores to the ***OFF*** position.
- ► Disconnect the connection to the grid so that the inverter cannot feed energy into the grid.
- ► Disconnect the inverter from all AC and DC voltage sources. Make sure that none of the connections can be restored accidentally.
- ► Ensure that the DC cables cannot be touched accidentally.

NOTICE

Incorrectly dimensioned solar system
If the solar system is dimensioned incorrectly, this may damage the inverter.

- ► When calculating the module string, always pay attention to technical specifications of the inverter (*input voltage range*, *maximum input current* and *maximum input power*, see "14. Technical Data", page 159).

NOTICE

Overheating of the DC connections
Exceeding the *maximum input current* can cause the DC connections to overheat and result in a fire.

- ► When dimensioning the module strings, always take into account the *maximum input current* of the DC connections (see "14. Technical Data", page 159).

NOTICE

Ingress of moisture
Moisture can enter via open DC connectors.

- ► To ensure protection degree IP65, close unused DC connectors with the rubber plugs that are attached to the DC connectors.

Before connecting the solar modules, turn both DC disconnectores to the ***OFF*** position.

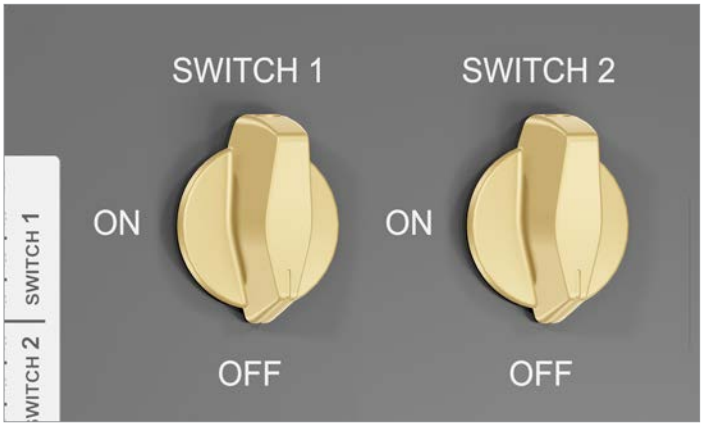

5.5.2 Polarity of the DC voltage

- ► Check the polarity of the DC voltage of the DC strings before connecting the solar modules.

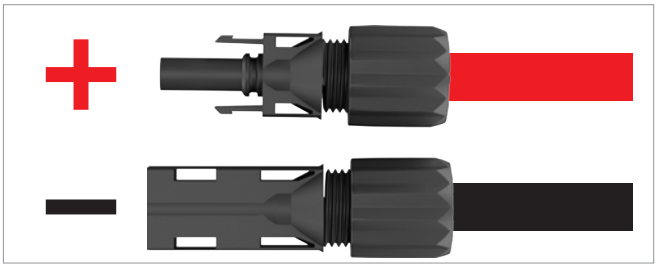

The inverter has an integrated function for detecting reverse polarity on the DC side. If such reverse polarity is detected, the inverter triggers an error message. This error message is indicated by the ***ALARM*** LED as soon as the inverter is switched on.

5.5.3 Arrangement of the DC inputs on the DC connection panel

The inverter has 6 DC inputs (DC1 to DC6), each with 2 DC connections. Up to 12 module strings can be connected to the inverter. Each DC input has its own MPP tracker.

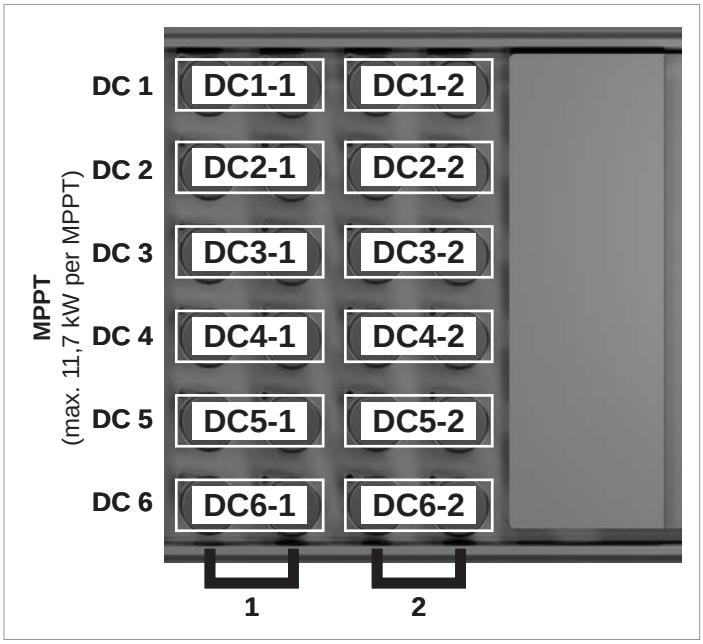

Fig. 5.23: Arrangement of the DC inputs on the DC connection panel

5.5.4 Functioning of integrated string monitoring

The string is monitored via current sensors. Fig. 5.24 shows the distribution of the current sensors to the module strings of a DC input.

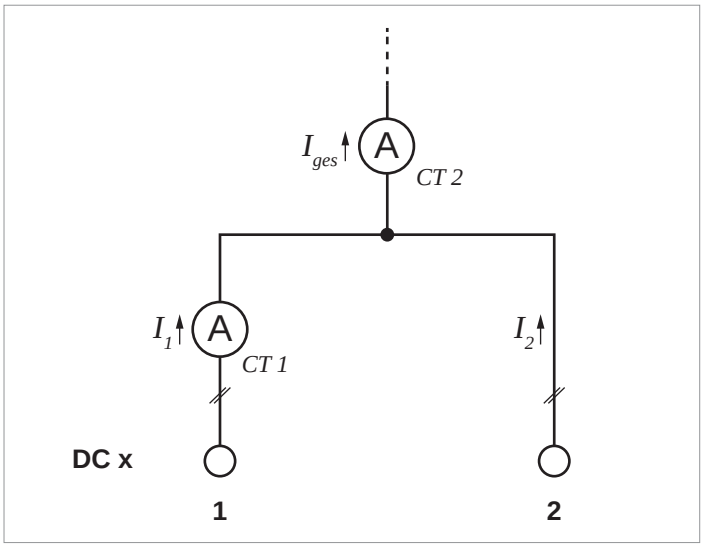

Fig. 5.24: Arrangement of the current sensors of a DC input

DC connection 1 has a current sensor (*CT 1*). Current sensor *CT 2* measures the sum current of the two module strings. The current in module string 2 is calculated by the difference: $I_2 = I_{ges} - I_1$.

5.5.5 Use of string fuses

When connecting one or two module strings per DC input, no string fuses are required.

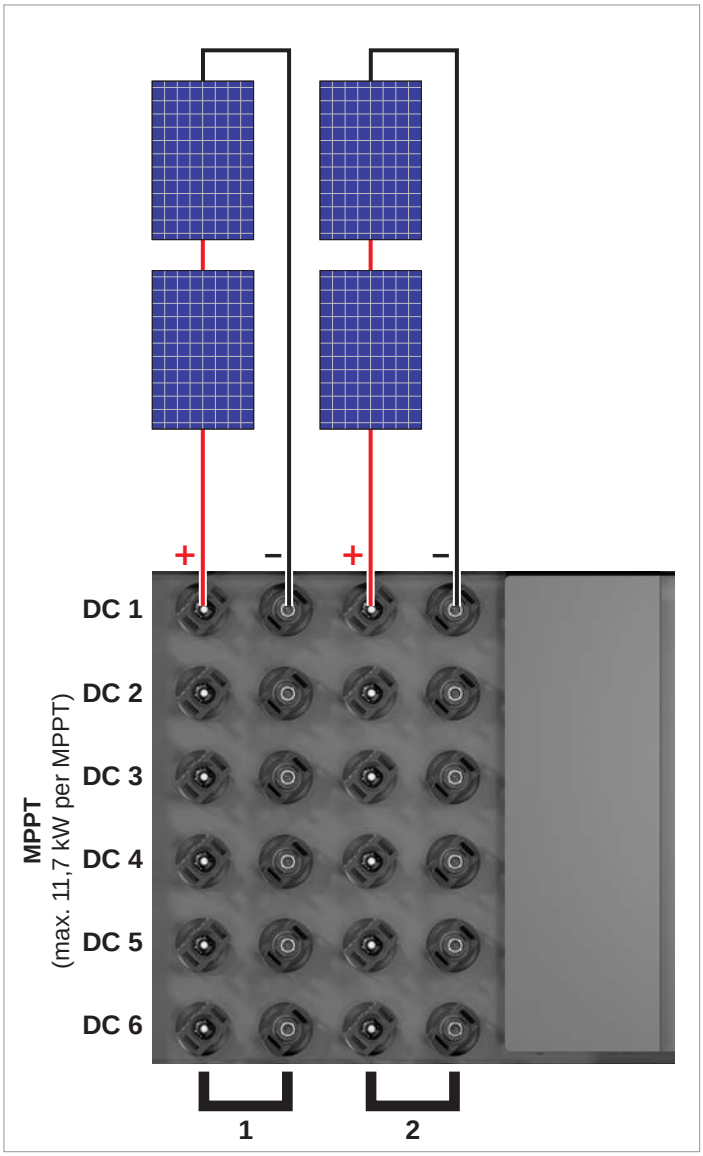

Fig. 5.25: Connection of one or two module strings per DC input (= MPP tracker): no string fuses necessary

Note that no string fuses are installed in the inverter! Suitable string fuses withs are available as accessories from Delta. These string fuses are integrated into the DC cable.

Should you require this, please contact Delta Support by telephone. You can find the contact information on the last page of this manual.

When selecting protective devices (such as string fuses), always cater for the *maximum current rating* of the solar modules.

5.5.6 Specifications for the DC cables

The DC plugs for all DC connectors are supplied with the inverter.

The DC plugs are only suitable for copper wire.

You can download the assembly instructions for the DC plugs from Amphenol at: www.amphenol-solar.com.

If you want to order more or need a different size, see the information in the following table.

	DC plugs for DC cables	DC connections on the inverter
DC–		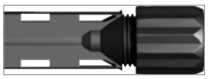
DC+		

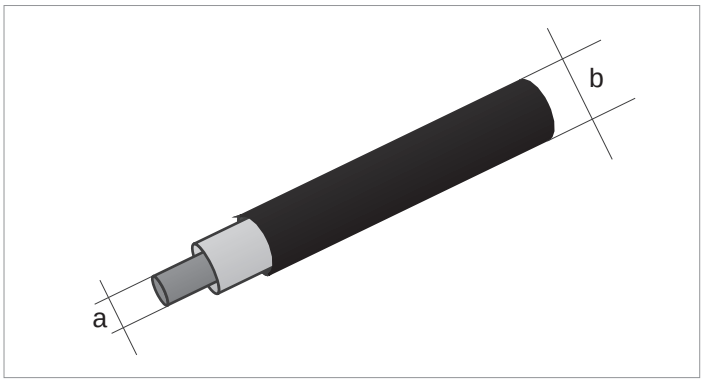

	a	b	Amphenol DC plug [1]
	mm²	mm	
DC+	4/6	5.3 ... 7.65	H4CFC4D●S
DC–	4/6	5.3 ... 7.65	H4CMC4D●S

[1] Included in scope of delivery

Fig. 5.26: Specification for the DC cables

5.6 Planning the installation of type 1+2 AC and DC combination surge protection devices

Related topics

“11.7 Installing/replacing DC surge protection devices”, page 114

“11.9 Installing/replacing type 2 combined AC surge protection devices”, page 128

“11.8 Installing/replacing type 1+2 combined AC surge protection devices”, page 121

The inverter is supplied with pre-installed type 2 AC and DC surge protection devices. Type 1+2 combined surge protection devices can be ordered as accessories.

To install the type 1+2 combination surge protection devices, the inverter must be opened. Therefore, it is best to install the type 1+2 combined surge protection devices before mounting the inverter and in a dry environment. The easiest way to do this is with the inverter horizontal.

Install the combined surge protection devices before connecting the inverter to the grid and solar modules. If the inverter is already in operation, the replacement is considerably more complicated for safety reasons.

All screws, spring washers and washers of the pre-installed type 2 surge protection devices must be reused for the type 1+2 combined surge protection devices. Take precautions to ensure that these parts cannot fall down and get lost during installation!

5.7 Planning the device communication and plant monitoring

Related topics

"6. Planning the Commissioning", page 51

"7.6 Connecting the communication card", page 62

5.7.1 Introduction

The inverter offers the following options for communication with other devices (e.g. PC, smartphone, data logger):

- RS485 (communication card with RS485 connections, digital inputs, dry contacts, external power-off and 12 V_{DC} power supply)
- Sub-1G antenna (included in scope of delivery)
- Wi-Fi module (optional accessory)

5.7.2 Components of the communication card

The connections for RS485, the digital inputs, the dry contacts and the external power-off (EPO) are all on the communication card. This means that the installation work can be combined.

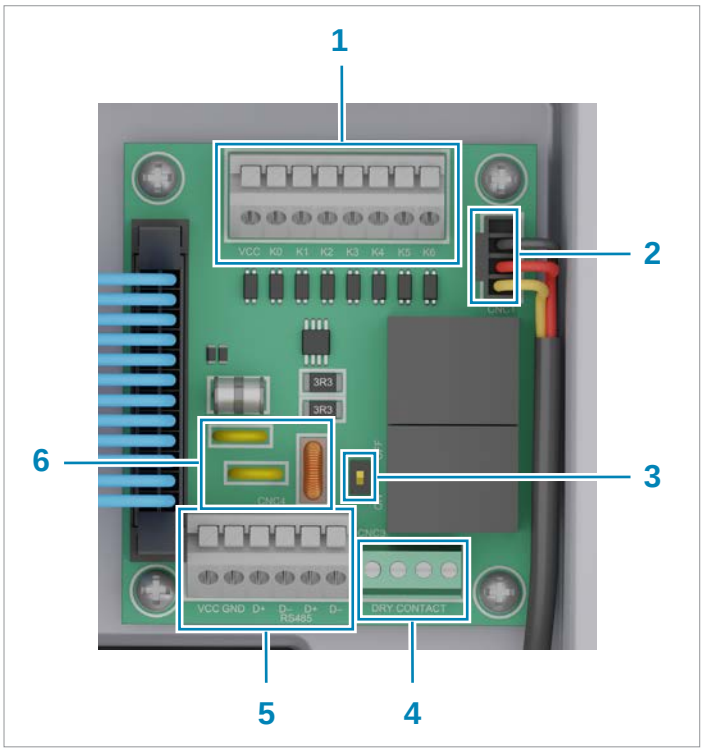

Fig. 5.27: Components of the communication card

1 Digital inputs and external power-off (terminal block)
2 Power supply for internal fan 1
3 DIP switch for the RS485 termination resistor
4 2 x dry contacts (terminal block)
5 RS485 (terminal block)
6 Protection against electromagnetic interference (EMI)

Connection	Connection type
2x RS485 (DATA+ and DATA–)	Terminal block
1x VCC (12 V, 0.5 A)	Terminal block
6x digital inputs	Terminal block
2x dry contacts	Terminal block
1x external power-off (EPO)	Terminal block

Table 5.4.: Connections on the communication card

5.7.3 Communication cable requirements

Cable type	Shielded and twisted pair cable (CAT5 or CAT6)
Cable diameter	7.2 / 8 / 10 mm
Wire cross section	0.25 to 1.5 mm^2

Table 5.5.: Specification of the communication cable

5.7.4 Cable gland for the communication connection

The inverter has one cable gland for up to four communication cables.

5.7.5 Connection of a data logger via RS485

The inverter can be connected to a data logger via RS485, e.g. for monitoring the PV system or changing the inverter settings.

The SUNSPEC protocol with Modbus RTU is used for data transmission.

Multiple inverters can be connected in series to a data logger.

Take into account the notes for ensuring a stable data connection.

Connecting a single inverter to a data logger

► Switch on the RS485 termination resistor.

► Lay the communication cable with a suitable clearance to the AC and DC cables to prevent interference in the data connection.

Connecting multiple inverters to a data logger

Consideration of the position of the data logger in the RS485 bus:

► The data logger is located at one of the two ends of the RS485 bus:
  – Switch the RS485 termination resistor of the data logger *on*.
  – Switch the RS485 termination resistor of the inverter at the other end of the RS485 bus *on*.

► The data logger is *not* at either end of the RS485 bus:
  – Switch the RS485 termination resistor of the data logger *off*.
  – Switch the RS485 termination resistor of the two inverters at the ends of the RS485 bus *on*.

► Switch the RS485 termination resistor on all other inverters *off* (default setting from the factory).

Further notes:

► Set a different inverter ID for each inverter. Otherwise the data logger cannot identify the individual inverters.

► Set the same RS485 baud rate at each inverter (factory setting: 19200).

► Lay the RS485 cable with a suitable clearance to the AC and DC cables to prevent interference in the data connection.

5.7.6 Connection of a DC1 data collector from Delta

You can use the DC1 data collector for, among other things:

- Commissioning the inverter (see “6. Planning the Commissioning”, page 51 and “8. Commissioning”, page 83)
- Updating the firmware
- Connecting to the MyDeltaSolar Cloud or another monitoring system

The inverter can be connected to the DC1 via RS485, Sub-1G or Wi-Fi.

Connection via RS485

Observe the general instructions in section “5.7.5 Connection of a data logger via RS485”, page 46.

The DC1 does not have an integrated RS485 termination resistor. For this reason, refer to the information in Fig. 5.28.

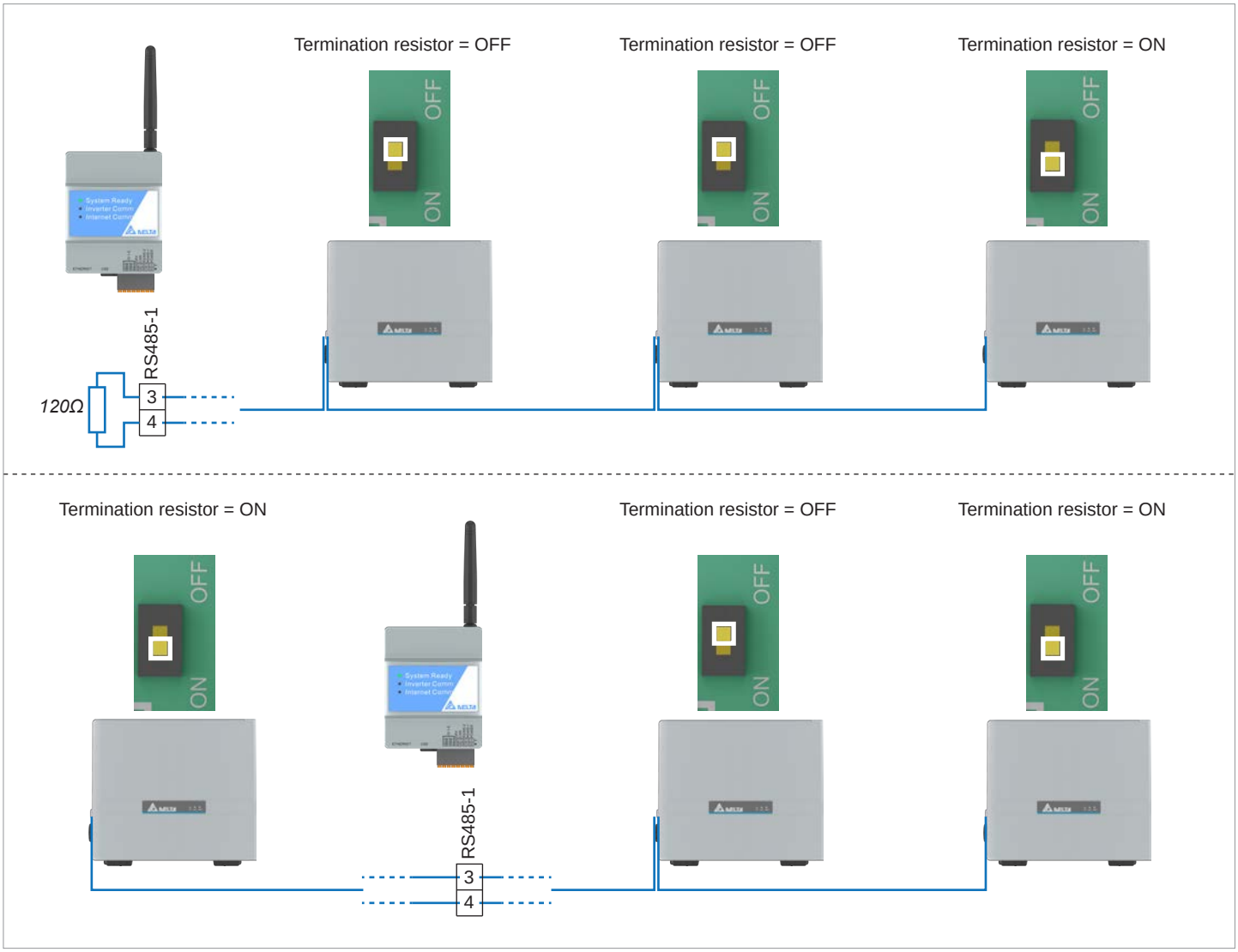

Fig. 5.28: RS485 connection diagram for a DC1 data collector with multiple inverters

Connection via Wi-Fi

To use the Wi-Fi feature, the Wi-Fi module must be installed on the inverter. The Wi-Fi module must be ordered separately from Delta.

Connection via Sub-1G

The inverter is supplied with a Sub-1G antenna. You can order a separate Sub-1G module for the DC1.

Required software

In order to access the DC1 and the inverter through it, you also need:

- A mobile device (smartphone, tablet) with the MyDeltaSolar app

or

- A Windows PC running the Delta Service Software (DSS)

The MyDeltaSolar app is available for iOS and Android.

You can download the DSS at https://solarsolutions.delta-emea.com.

5.7.7 Connecting an external alarm unit

The inverter has two relays for triggering external alarm devices. The communication card contains 2 pairs of dry contacts, each of which can be connected to an external acoustic or optical alarm device.

The communication card also has a 12 V_{DC} power supply.

Both relays are designed as normally open contacts.

After commissioning, each relay can be assigned an event at which the relay switches. By default, the relays are disabled.

To set an event for the relays, you need:

- A mobile device (smartphone, tablet) with the MyDeltaSolar app

or

- A Windows PC running the Delta Service Software (DSS)

The MyDeltaSolar app is available for iOS and Android.

You can download the DSS at https://solarsolutions.delta-emea.com.

Event	Description
`Disabled`	The function is disabled.
`On Grid`	The inverter is connected to the grid.
`Fan defective`	The fans are defective.
`Insulation`	The insulation test has failed.
`Alarm`	An error event message, fault message or warning has been sent.
`Error`	An error event message has been sent.
`Fault`	A fault message has been sent.
`Warning`	A warning message has been sent.

Table 5.6.: Events for which the relay can trigger

The default setting for both relays is **`Disabled`**.

5.7.8 Connecting a ripple control receiver

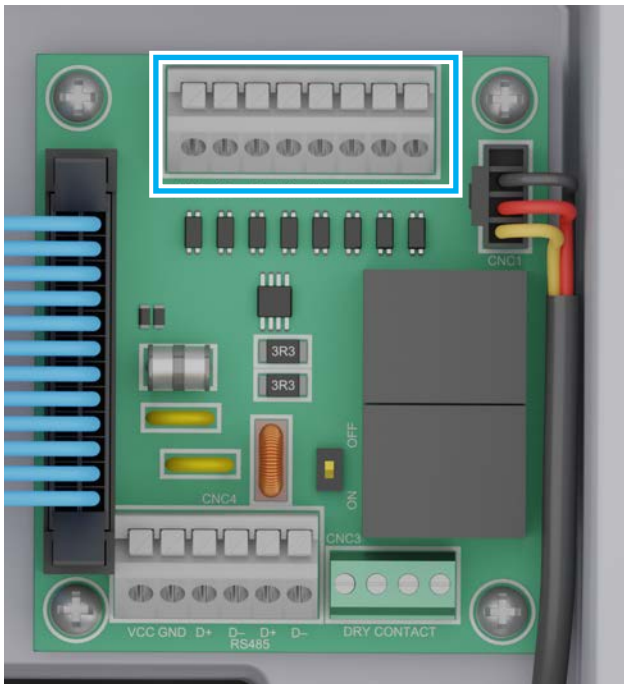

Fig. 5.29: Terminal block with digital inputs

An external ripple control receiver can be connected to the digital inputs.

The digital inputs are located on the communication card.

Pin	Naming	Short circuit	Assigned action
1	V1	-	-
2	K0	V1 + K0	External power-off (EPO)
3	K1	V1 + K1	Maximum active power limited to 0 %
4	K2	V1 + K2	Maximum active power limited to 30 %
5	K3	V1 + K3	Maximum active power limited to 60 %
6	K4	V1 + K4	Maximum active power limited to 100%
7	K5	V1 + K5	Reserved
8	K6	V1 + K6	Reserved

Table 5.7.: Pin assignment of the terminal block with digital inputs for connecting a ripple control receiver

5.7.9 External power-off

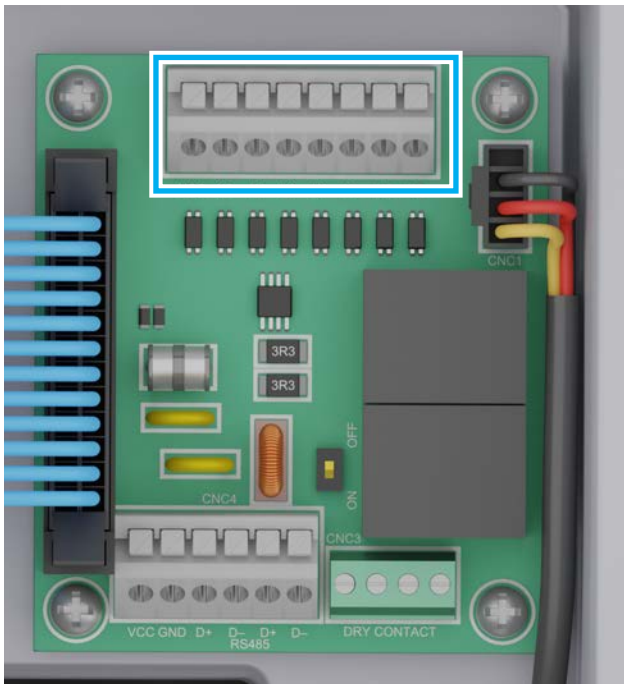

Fig. 5.30: Terminal block with digital inputs

To disconnect the inverter AC-side from the grid connection point, a switching signal can be sent via an external monitoring unit using the digital input K0.

The relay is designed at the factory as a normally open contact. The relay can also be set as an normally closed contact in the inverter settings.

The connection for external disconnection is located on the terminal block with the digital inputs of the communication card.

Pin	Naming	Short circuit	Assigned action
1	V1	-	-
2	K0	V1 + K0	External power-off (EPO)
3	K1	V1 + K1	Maximum active power limited to 0%
4	K2	V1 + K2	Maximum active power limited to 30%
5	K3	V1 + K3	Maximum active power limited to 60%
6	K4	V1 + K4	Maximum active power limited to 100%
7	K5	V1 + K5	Reserved
8	K6	V1 + K6	Reserved

Table 5.8.: Pin assignment of the terminal block for the external power-off

5.7.10 Connecting a PC

A PC can be connected to the inverter via RS485.

You can use the PC to commission the inverter and change the settings. This requires the following accessories.

Accessories	Description
Standard USB/RS485 adapter	For connecting the PC to the inverter.
Delta Service Software (DSS)	For changing the inverter settings.

To select a suitable USB/RS485 adapter, please contact Delta Customer Service.

You can download the DSS at https://solarsolutions.delta-emea.com.

Cable requirements

Bell wire. Both ends open.

5.8 Grid and system protection

1. The German standard VDE-AR-N 4105 requires external grid and system protection with a coupling switch for PV systems larger than 30 kVA.
2. Alternatively, VDE-AR-N 4105 allows the use of an inverter with an internal coupling switch when this switch disconnects the inverter from the grid in less than 100 ms.

This inverter meets the requirement in (2). External grid and system protection is not required.

6. Planning the Commissioning

6.1 Introduction

Once the inverter has been installed and all electrical connections (to the grid, to the solar modules, communication) have been set up, the inverter can be commissioned.

In order to allow you to plan commissioning on site, the various commissioning methods are briefly described in this chapter.

6.2 Commissioning options

6.2.1 Delta Service Software (DSS)

The Delta Service Software is available for Windows PCs.

The PC is connected to the RS485 terminal block of the inverter.

You must commission each inverter individually.

You can use the DSS to set all parameters of the inverter.

The firmware of the inverter can be updated with this method.

Download link: https://solarsolutions.delta-emea.com/en/Solar-Inverter-Support-171.htm

6.2.2 MyDeltaSolar app with direct connection to the inverter via Wi-Fi

The MyDeltaSolar app is available for mobile devices (smartphone, tablet) with iOS or Android.

The mobile device is connected directly to the inverter via Wi-Fi (point-to-point connection). This requires the Wi-Fi module to be installed on the inverter, which must be ordered separately.

Since this creates a point-to-point connection between the mobile device and the inverter, you must commission each inverter individually.

With the MyDeltaSolar app you can set all parameters of the inverter.

The firmware of the inverter can be updated with this method.

6.2.3 MyDeltaSolar app with DC1 Data Collector from Delta

The DC1 can connect to the inverter via RS485, Wi-Fi or Sub-1G. These connection types can also be used in combination. For details, refer to the manual of the DC1 data collector, in particular the number of inverters that can be connected to the DC1 via the respective connection variant.

When RS485 is used, the DC1 is connected to the RS485 terminal block of one of the inverters in the RS485 series.

The Sub-1G antenna is included in the scope of delivery.

The Wi-Fi module must be ordered separately.

You can perform the following tasks on the inverters connected to the DC1:

- Commission all inverters at the same time.
- Set all parameters of the inverters.
- Update the inverter firmware.

7. Installation

► Read chapter "5. Planning the installation", page 29 and this chapter in full before you start installation.

7.1 Safety instructions

DANGER

Electric shock
Potentially fatal voltages are present in the inverter during operation. When the inverter is disconnected from all power sources, this voltage remains in the inverter for up to 60 seconds.
You should therefore always carry out the following steps before working on the inverter:

1. Turn both DC disconnectores to the ***OFF*** position.
2. Disconnect the inverter from all AC and DC voltage sources and make sure that none of the connections can be restored accidentally.
3. Wait at least 60 seconds for the internal capacitors to discharge.

DANGER

Electric shock
Potentially fatal voltages are present at the DC connections of the inverter. When light falls on the solar modules, they immediately start to generate electricity. This also happens when light does not fall directly on the solar modules.

► Never disconnect the inverter from the solar modules when it is under load.
► Turn both DC disconnectores to the ***OFF*** position.
► Disconnect the connection to the grid so that the inverter cannot feed energy into the grid.
► Disconnect the inverter from all AC and DC voltage sources. Make sure that none of the connections can be restored accidentally.
► Ensure that the DC cables cannot be touched accidentally.

DANGER

Electric shock
The inverter has a high leakage current value.

► **Always** connect the ground cable first, then the AC and DC cables.

WARNING

Electric shock
If the doors of the inverter are open, the IP65 degree of protection is no longer guaranteed.

► Only open the door when absolutely necessary.
► Do not open the door if water or dirt might enter the inverter.
► After work is completed, ensure that the door is properly shut and tightened again. Check that the door is properly sealed.

WARNING

Heavy weight
The inverter is heavy.

► Lift and carry the inverter with at least 2 people.

NOTICE

Water ingress.

► All sealing caps removed during installation should be stored for later use (e.g. (e.g. transportation or storage).

NOTICE

Working in freezing conditions
In frosty conditions, the rubber seal of the front door can freeze to the enclosure, tear when opened and thus become leaky.

► Before opening the front door, defrost the rubber seal with some warm air.
► Open the front door slowly.

7.2 Sequence of installation and commissioning steps

7.2.1 General information

Ideally, install optional internal accessories in a dry environment. If the inverter is installed outdoors, this is done

Install optional internal accessories such as type 1+2 AC and DC combined surge protection devices ideally before mounting the inverter.

Step	Notice	Description in chapter
Mounting the inverter		“7.3 Mounting the inverter”, page 54
Grounding the Inverter Housing		“7.4 Grounding the inverter housing”, page 57
Preparing electrical installation		“7.5 Preparing electrical installation”, page 59
Connecting the communication card	Optional	“7.6 Connecting the communication card”, page 62
Connecting the PC to the inverter	This step is only necessary if commissioning is carried out via PC.	“7.6.7 Connecting a PC via RS485 (optional)”, page 74
Install type 1+ 2 DC surge protection devices	Optional	“11.7 Installing/replacing DC surge protection devices”, page 114
Install type 1+ 2 AC surge protection devices	Optional	“11.8 Installing/replacing type 1+2 combined AC surge protection devices”, page 121
Installing the Wi-Fi module	Optional	“11.11 Installing/replacing the Wi-Fi module”, page 138
Connecting the grid (AC)		“7.7 Connecting the grid (AC)”, page 75
Connecting the solar modules (DC)		“7.8 Connecting the solar modules (DC)”, page 79
Completing electrical installation		“7.9 Completing electrical installation”, page 81
Installing the Sub-1G antenna	Optional	“7.6 Connecting the communication card”, page 62
Commissioning the inverter		“8. Commissioning”, page 83

7.3 Mounting the inverter

7.3.1 Ground mounting (upright)

WARNING

Heavy weight
The inverter is heavy.
► Lift and carry the inverter with at least 2 people.

The feet for floor mounting must be ordered separately.

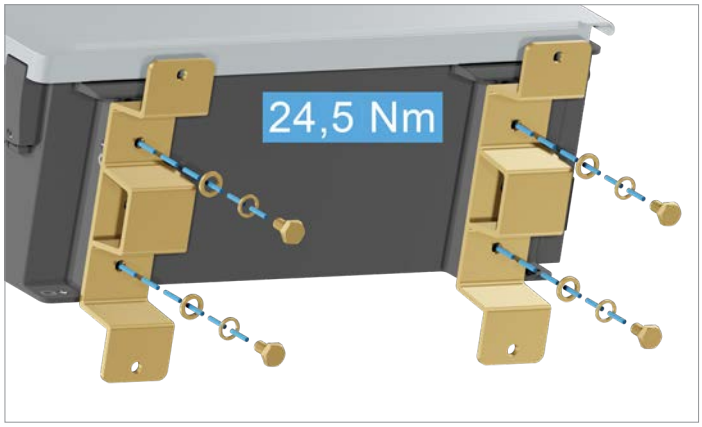

1. Screw the 2 feet for ground mounting onto the underside of the inverter (torque: 24.5 Nm). 4 screws, spring washers and washers are included in the scope of delivery.

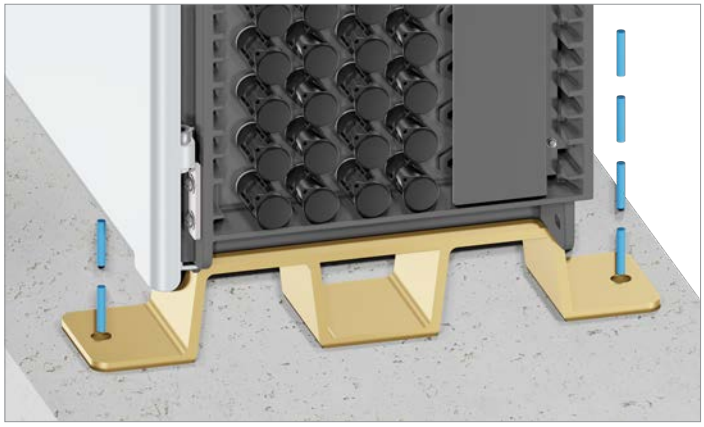

2. Place the inverter vertically on the mounting surface and screw the 2 feet onto the mounting surface.

7.3.2 Wall mounting (suspended)

Special case: hanging the inverter without screwing into the base
In general, the inverter must **always** be screwed onto the base during wall mounting. Deviations from this are only possible in exceptional cases approved by Delta Electronics. Always check with Delta Customer Service **first** if you want to deviate from the work instructions given in this section.

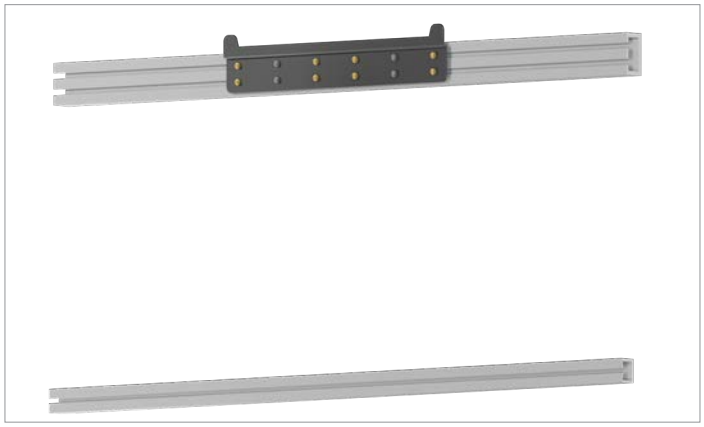

1. Attach the mounting plate to the wall/mounting system with at least 8 M6 screws.

2. Tighten the 8 points highlighted in the image at a minimum.

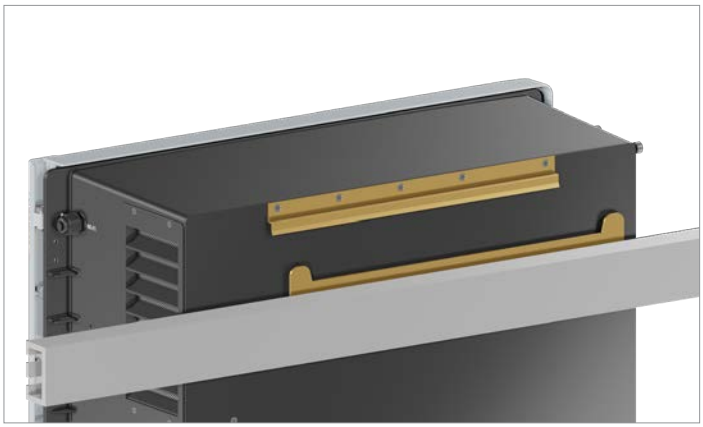

3. Mount the inverter on the mounting plate.

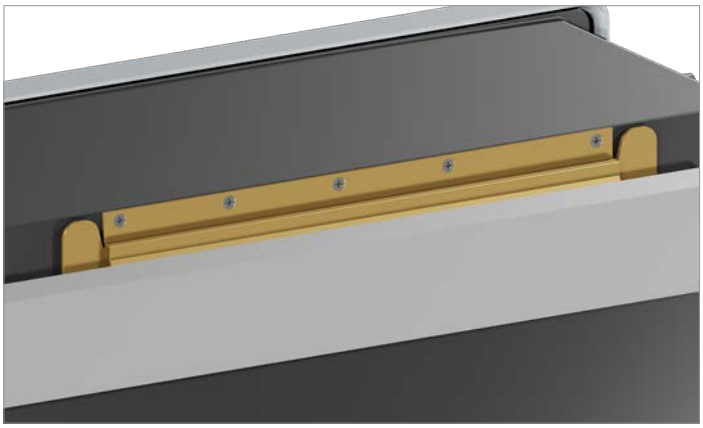

4. Check that the inverter is correctly mounted on the mounting plate.

5. Screw the lower left side of the inverter onto the wall or mounting system using the M6 screw, spring washer and washer.

6. Screw the lower right side of the inverter onto the wall or mounting system using the M6 screw, spring washer and washer.

7.4 Grounding the inverter housing

WARNING

High current

- ► Always observe the local regulations relating to grounding cable requirements.
- ► To increase the safety of the system, always ground the inverter housing even when this is not required by the local regulations.
- ► Always ground the inverter housing **before** connecting the inverter to the grid and the solar modules.
- ► The grounding cable cross-section must be at least 6 mm².

The inverter housing can be grounded at 2 points:

- External, bottom left at the grounding screw
- Internal, on the PE screw of the AC connection

7.4.1 Grounding via the grounding screw

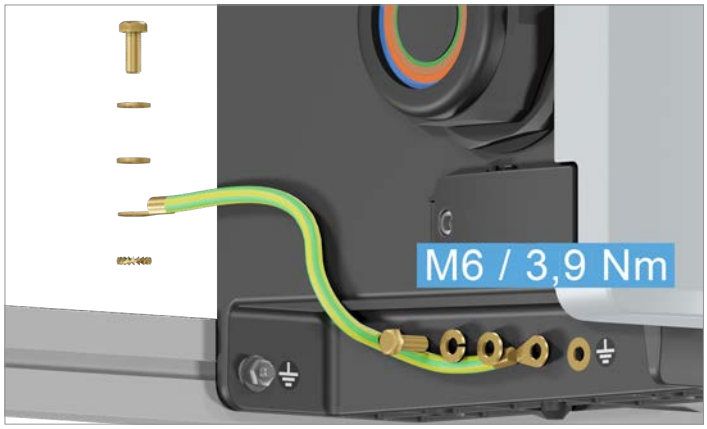

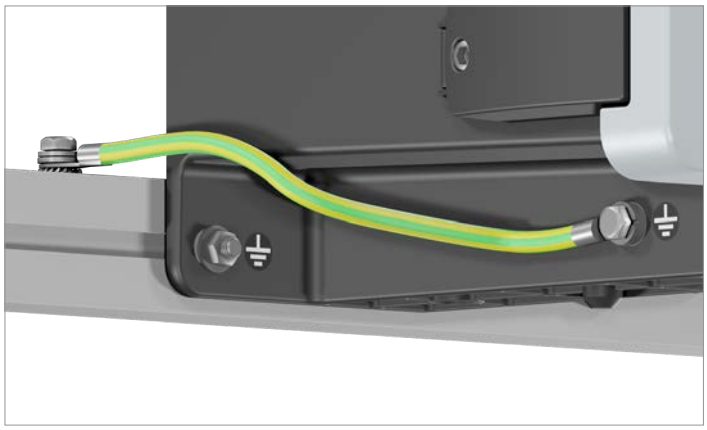

1. Screw the grounding cable onto the left side of the inverter base (torque: 3.9 Nm). This requires an M6 screw, spring washer and washer. A toothed washer is **not** required.

2. Perform a continuity check of the grounding connection.
   → If there is not a sufficiently conductive connection, clean the contact surface on the grounding screw or use a toothed washer if necessary.

7.4.2 Grounding via the PE screw

Cable lug selection

Select the cable lugs according to the following table:

PE screw material: nickel-plated	
Cables	**Cable lug**
Copper	• Copper, tin coated • Pure copper
Aluminum	• Aluminum, tin-coated • Al-Cu crimp connectors

Table 7.1.: Permissible cable lug types for the PE screw

1. Screw the PE/PEN cable onto the PE screw (torque: 14.7 Nm). M10 nut, spring washer and washer are provided.

2. Perform a continuity check of the grounding connection.

7.5 Preparing electrical installation

There is normally an isolating switch (for example in an equipment wiring box) between the inverter and the grid connection box and between the inverter and the solar modules. This isolates the inverter from all the AC and DC voltage sources and renders it de-energized.

1. To ensure that no voltage can be applied to the inverter during installation work, open the isolating switches between the inverter and the grid connection point and between the inverter and the solar modules.

   Secure all the isolating switches to prevent them from being switched back on accidentally.

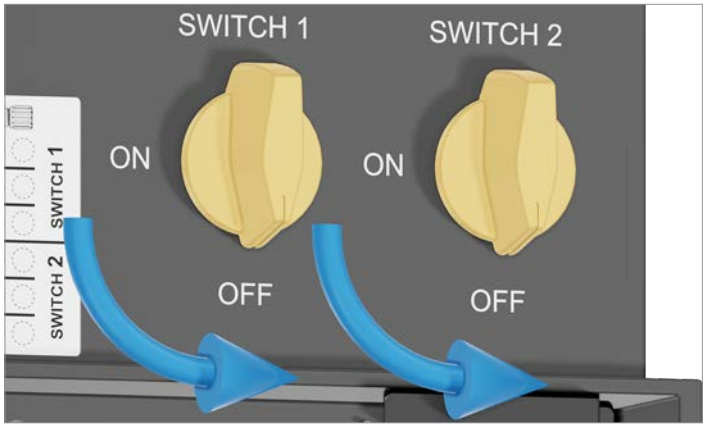

2. Turn both DC disconnectores to the ***OFF*** position.

3. Remove the Allen key from the upper door lock.

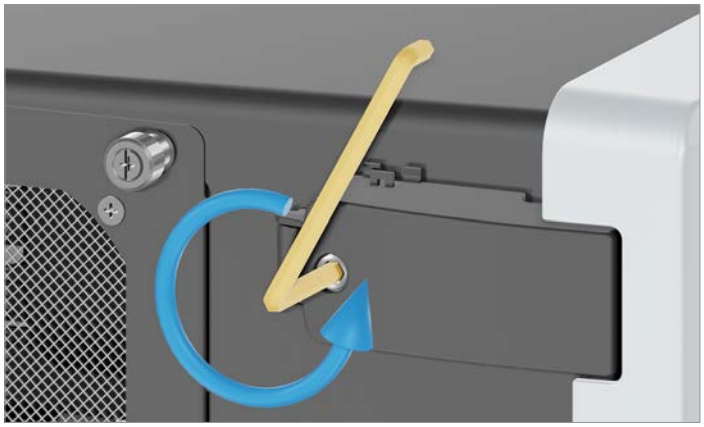

4. Unscrew and open the upper door lock cover.

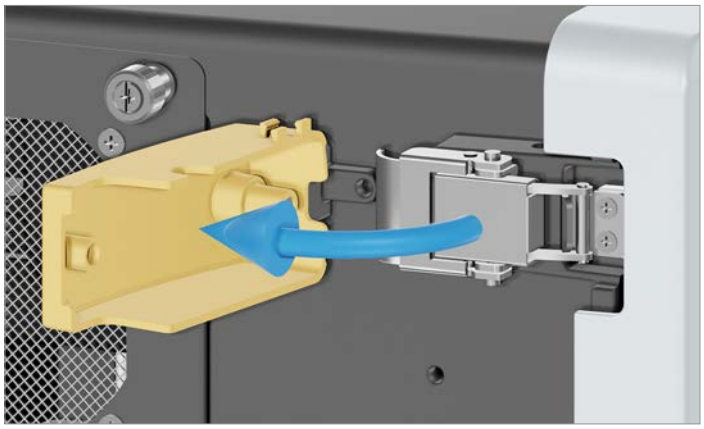

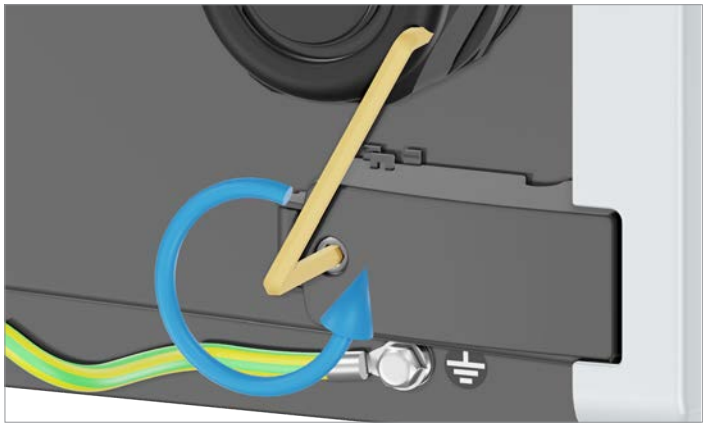

5. Unscrew and open the lower door lock cover.

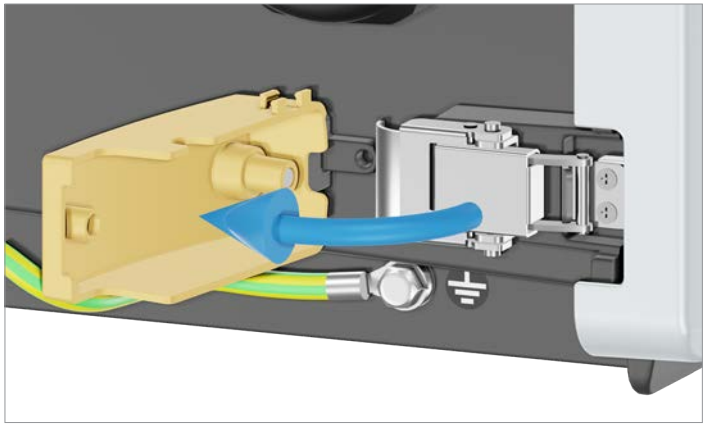

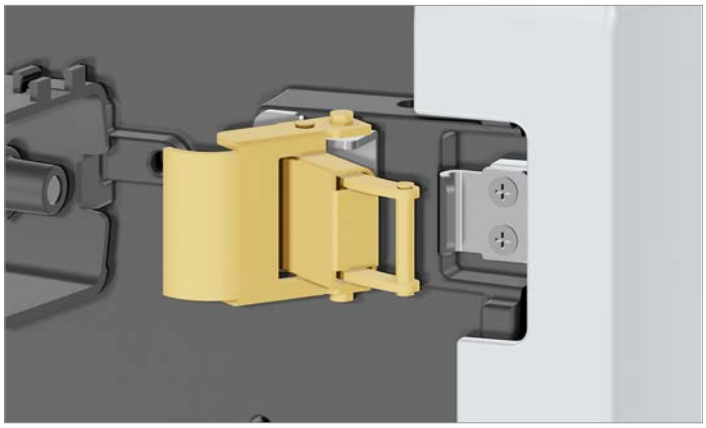

6. Open the upper and lower door lock.

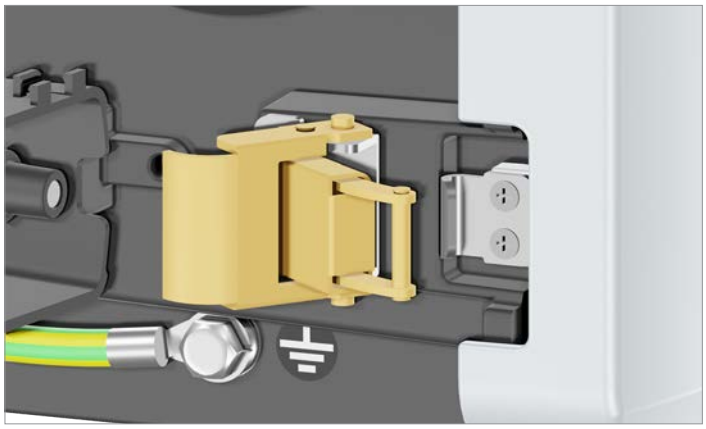

7. Open the door and secure it on top with the Allen key.

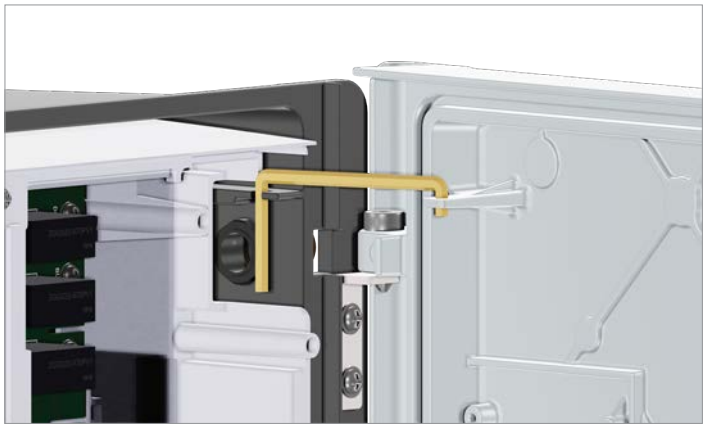

8. Alternatively, the door can also be unhinged.

7.6 Connecting the communication card

The connections for RS485, the dry contacts, the digital inputs and the external power-off (EPO) are all on the communication card. This means that the installation work can be combined.

NOTICE

Water ingress.
► All sealing caps removed during installation should be stored for later use (e.g. (e.g. transportation or storage).

7.6.1 Connections on the communication card

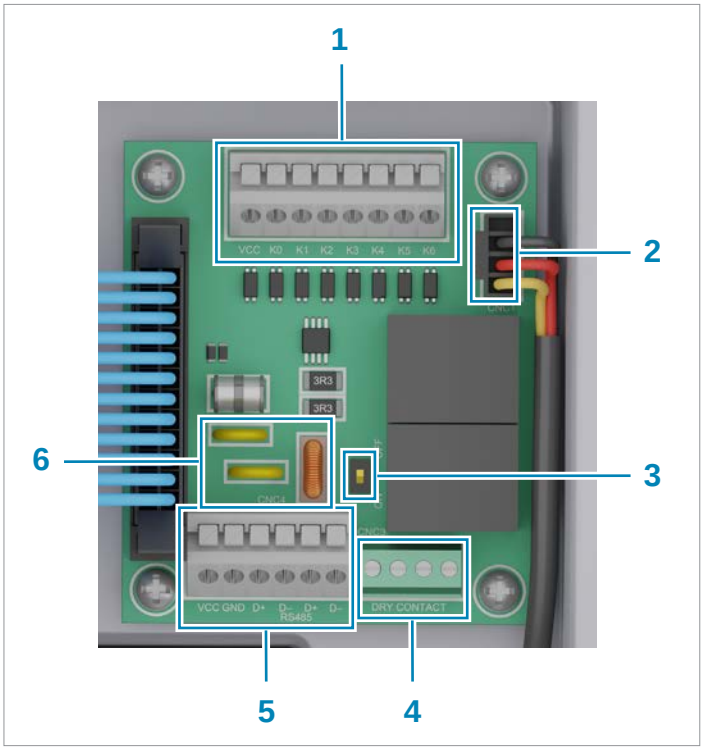

Fig. 7.1: Components of the communication card

1 Digital inputs and external power-off (terminal block)
2 Power supply for internal fan 1
2 DIP switch for the RS485 termination resistor
3 2 x dry contacts (terminal block)
4 RS485 (terminal block)
5 Protection against electromagnetic interference (EMI)

Connection	Connection type
2x RS485 (DATA+ and DATA–)	Terminal block
1x VCC (12 V, 0.5 A)	Terminal block
6x digital inputs	Terminal block
2x dry contacts	Terminal block
1x external power-off (EPO)	Terminal block

Table 7.2.: Connections on the communication card

Cable type	Shielded and twisted pair cable (CAT5 or CAT6)
Cable diameter	2 x 7.2 / 8 / 10 mm
Wire cross section	0.25 ... 1.5 mm^2

Table 7.3.: Specification of the communication cable

The communication cable is required for connection to the following units:

- Data logger
- External alarm unit
- Ripple control receiver
- External power-off

Lay the communication cable with a suitable clearance to the AC and DC cables to prevent interference in the data connection.

7.6.2 Threading the communication cable

1. Unscrew the cable gland of the communication connection and remove the cable gland and seal.

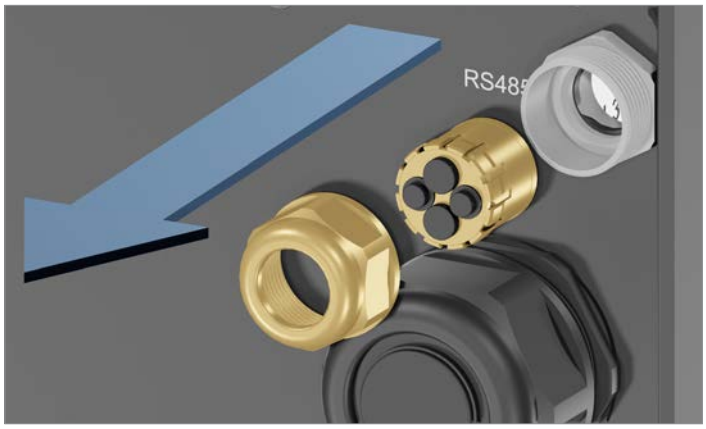

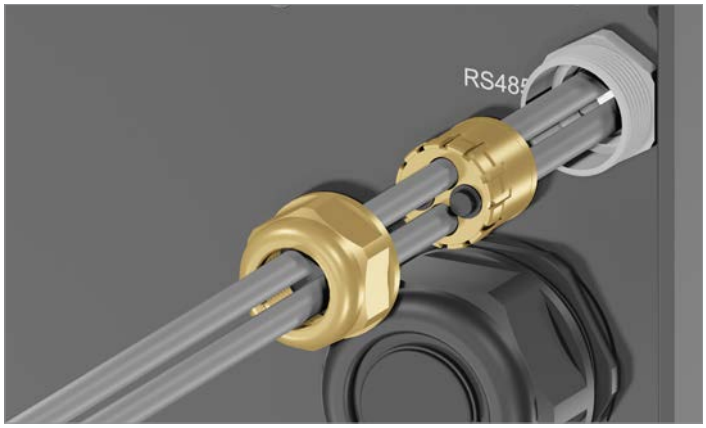

2. Thread all communication cables through the cable gland and seal.

3. Insert the seal and cable gland of the communication connection and fasten the cable gland.

Connecting the communication card

7.6.3 Connecting a data logger via RS485

7.6.3.1 Introduction

NOTICE

Unwanted currents.
In some installation variants, unwanted currents can flow when multiple inverters are connected via RS485.
► Do not use GND and VCC.

Terminal assignment of the RS485 terminal block

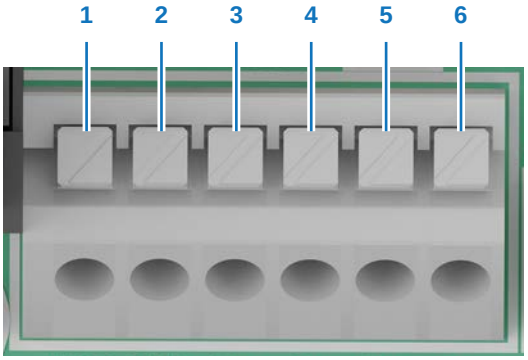

1 VCC (+12 V; 0.5 A)
2 GND
3 DATA+ (RS485)
4 DATA– (RS485)
5 DATA+ (RS485)
6 DATA– (RS485)

Fig. 7.2: Terminal assignment of the RS485 terminal block

Terminal pair 3/4 or 5/6 can be used to connect a data logger. The second terminal pair is only required when connecting several inverters via RS485. The second terminal pair can also be used to connect a PC.

Data format

Baud rate	9600, 19200, 38400; Standard: 19200
Data bits	8
Stop bit	1
Parity	Not applicable

DIP switch for the RS485 termination resistor

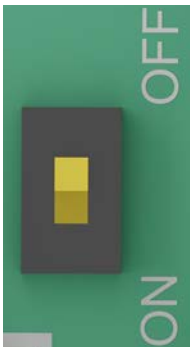

Fig. 7.1: DIP switch for the RS485 termination resistor

RS485 connection diagram for a single inverter

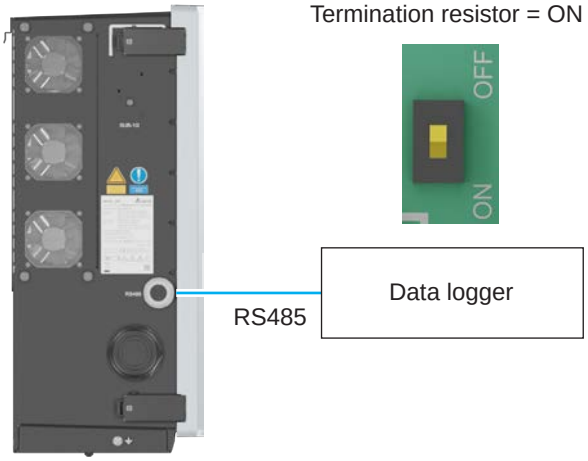

Fig. 7.2: RS485 connection diagram for a single inverter

RS485 connection diagram for multiple inverters

If you are using a DC1 data collector from Delta, also refer to the notes in the next section.

- ► On the last inverter in the RS485 bus, set the DIP switch of the RS485 termination resistor to ***ON***.
- ► If the data logger is located at one end of the RS485 chain, then also switch on the RS485 termination resistor of the data logger. If the data logger does not have an integrated RS485 termination resistor, then also switch on the DIP switch of the first inverter in the RS485 series, i.e. the one that is directly connected to the data logger.
- ► Set a different inverter ID at each inverter during commissioning of the inverters.

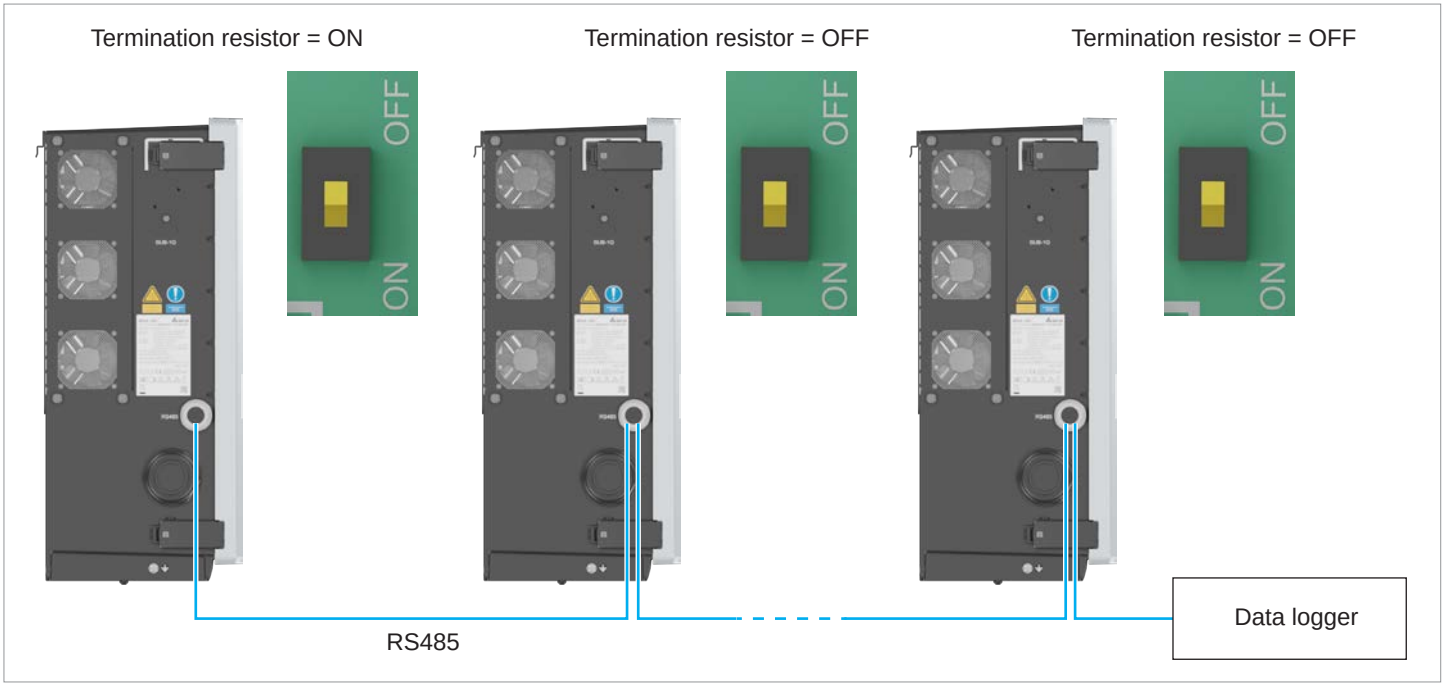

Fig. 7.3: RS485 connection diagram for several inverters

RS485 connection diagram for a DC1 data collector with multiple inverters

The DC1 data collector from Delta does not have an integrated RS485 termination resistor. Depending on where the DC1 is located in the RS485 bus, an external RS485 termination resistor may need to be connected, see Fig. 7.4, p. 67.

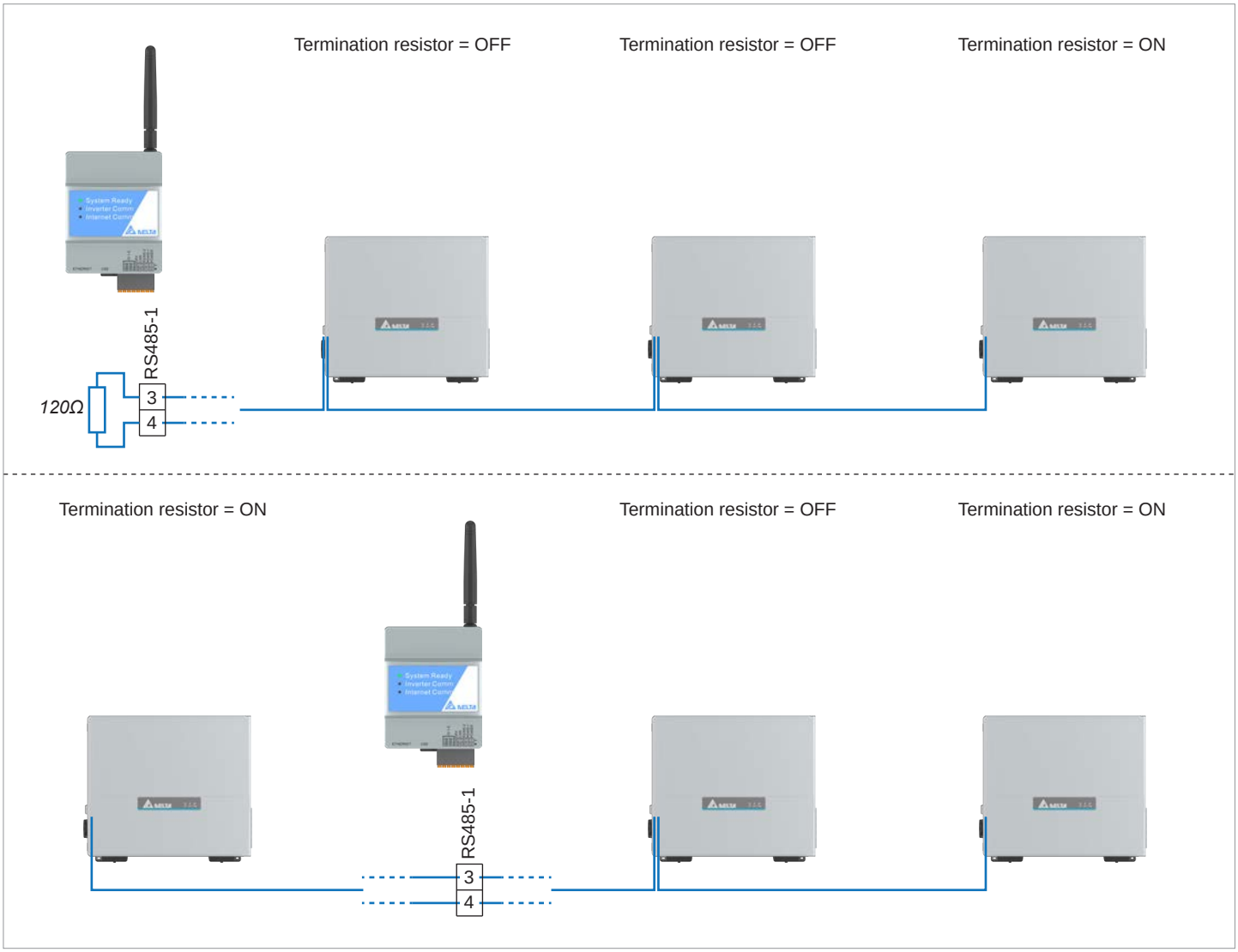

Fig. 7.4: RS485 connection diagram for a DC1 data collector with multiple inverters

7.6.3.2 Wiring for a single inverter

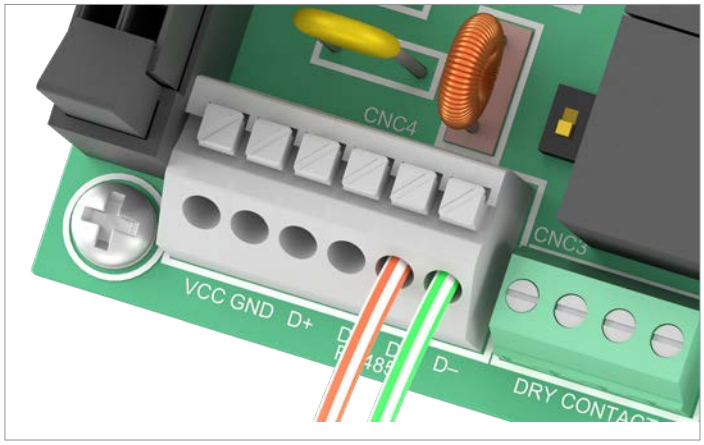

1. Connect the DATA+ wire to terminal 5 and the DATA– wire to terminal 6.

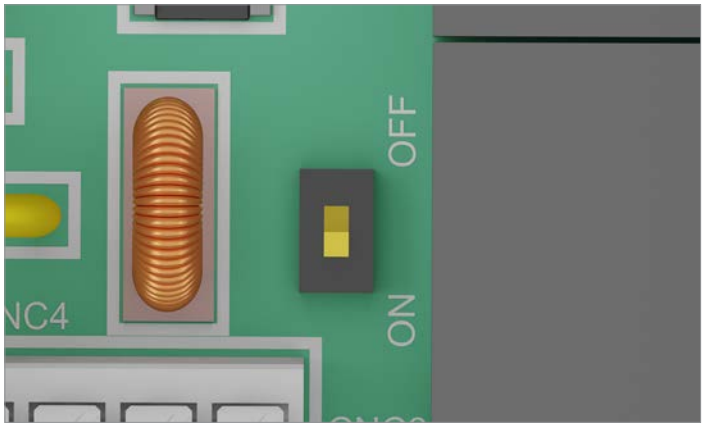

2. Set the DIP switch for the RS485 termination resistor (DIP 2) to the ***ON*** position.

7.6.3.3 Wiring for multiple inverters

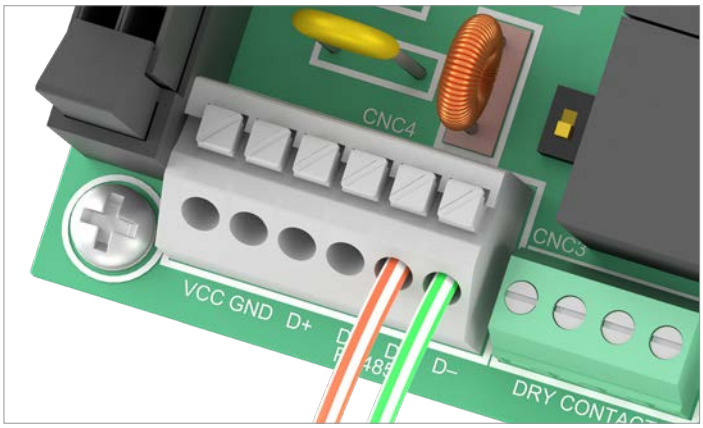

1. On the cable coming from the data logger: Connect the DATA+ wire to terminal 5 and the DATA– wire to terminal 6.
   On the cable going to the second inverter: Connect the DATA+ wire to terminal 3 and the DATA– wire to terminal 4.

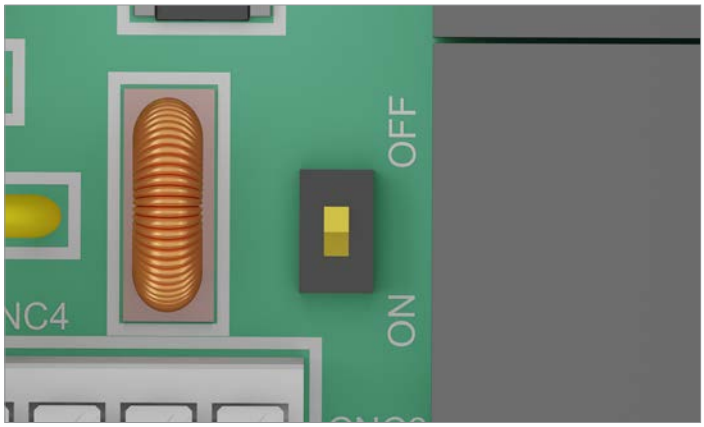

2. Depending on the RS485 connection diagram (see “RS485 connection diagram for multiple inverters”, page 66), switch the DIP switch for the RS485 termination resistor on or off.

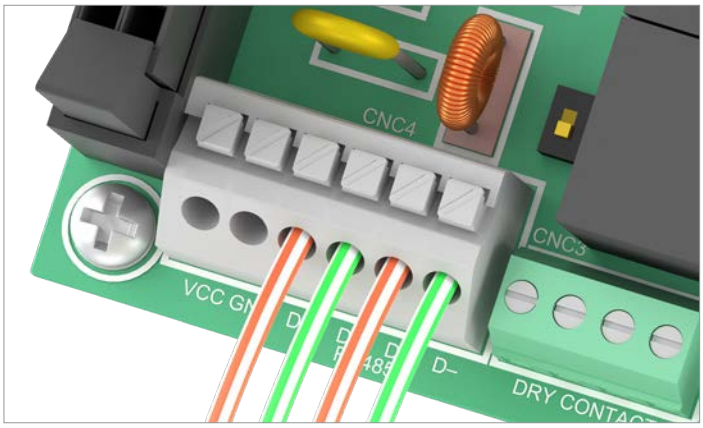

3. On the cable coming from the previous inverter: Connect the DATA+ wire to terminal 5 and the DATA– wire to terminal 6.
   On the cable going to the next inverter: Connect the DATA+ wire to terminal 3 and the DATA– wire to terminal 4.

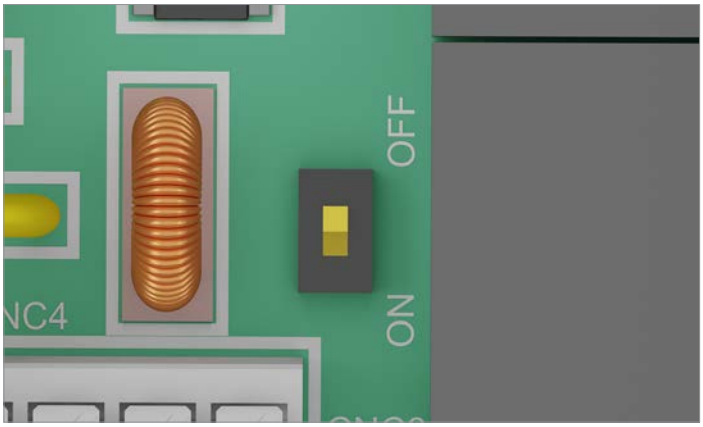

4. Set the DIP switch for the RS485 termination resistor to the ***OFF*** position.

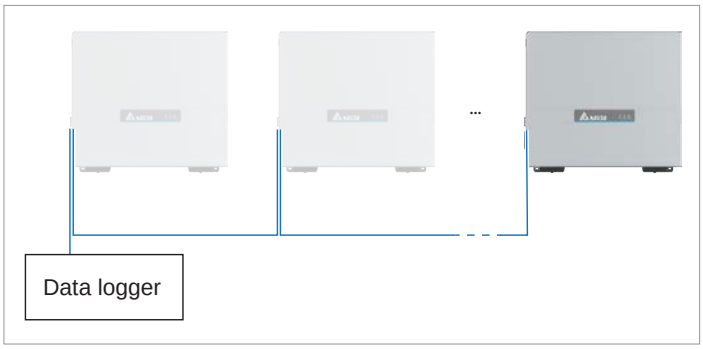

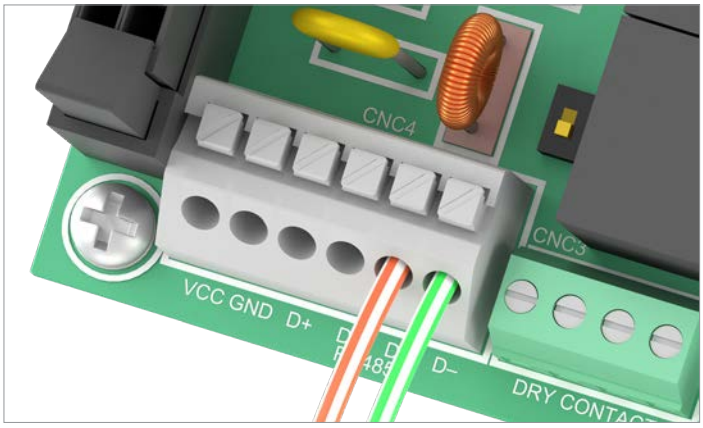

5. Connect the DATA+ wire to terminal 5 and the DATA– wire to terminal 6.

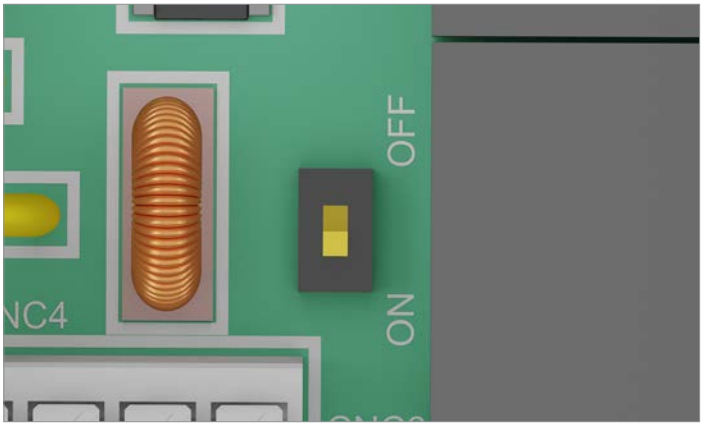

6. Set the DIP switch for the RS485 termination resistor to the ***ON*** position.

7.6.4 Connecting an external alarm unit

The external alarm unit is connected to the dry contacts.

7.6.4.1 Wiring for an external alarm unit with an external 12 V_{DC} power supply

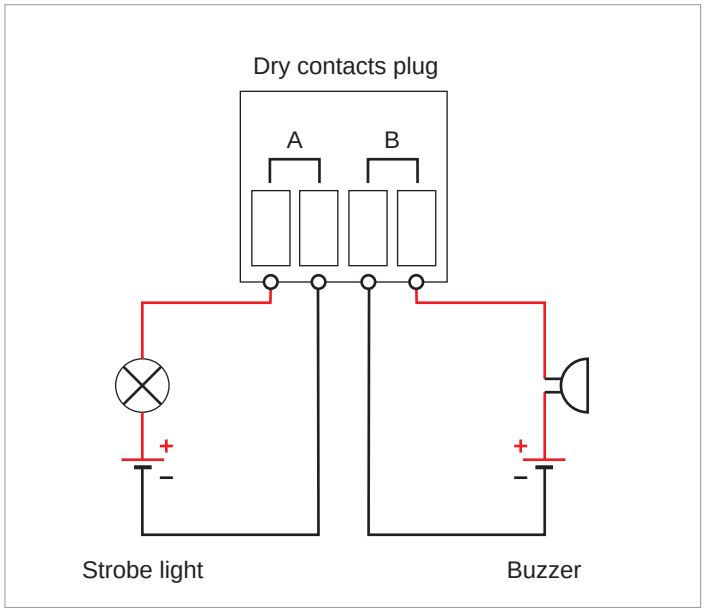

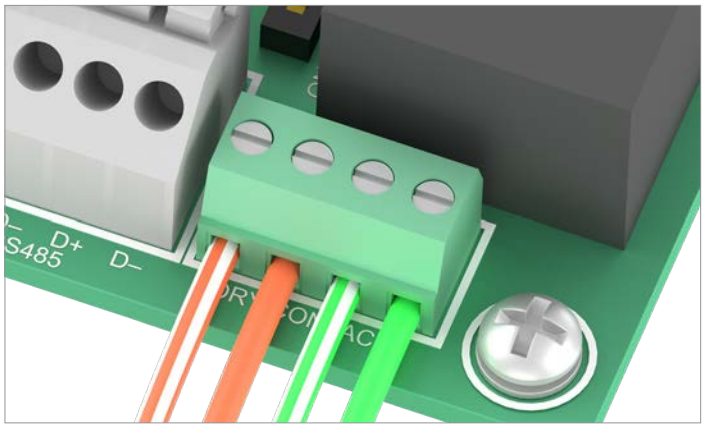

Fig. 7.5: Connection example: Connecting 2 external alarm units with external 12 V_{DC} power supply to the dry contacts

► An event can be assigned to the dry contacts with Delta Service Software or the MyDeltaSolar app after commissioning.

7.6.4.2 Wiring for a single alarm unit with an internal 12 V_{DC} power supply

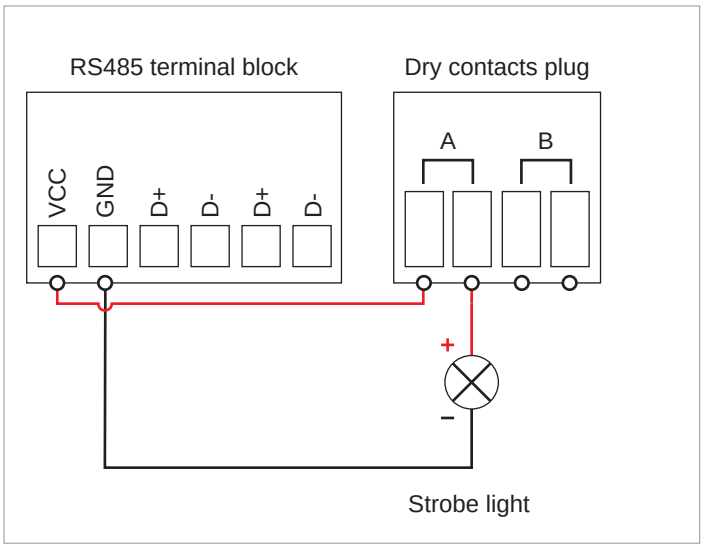

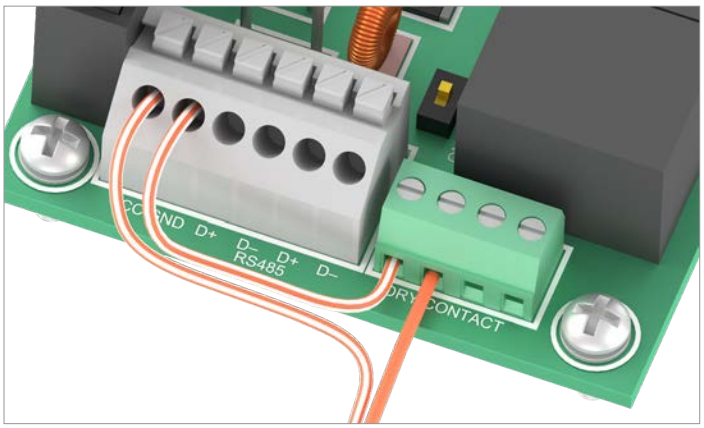

Fig. 7.6: Connection example: Connecting 1 external alarm unit with internal 12 V_{DC} power supply to the dry contacts

► An event can be assigned to the dry contacts with Delta Service Software or the MyDeltaSolar app after commissioning.

7.6.5 Connecting a ripple control receiver

Pin	Naming	Short circuit	Assigned action
1	V1	-	-
2	K0	V1 + K0	External power-off (EPO)
3	K1	V1 + K1	Maximum active power limited to 0 %
4	K2	V1 + K2	Maximum active power limited to 30 %
5	K3	V1 + K3	Maximum active power limited to 60 %
6	K4	V1 + K4	Maximum active power limited to 100%
7	K5	V1 + K5	Reserved
8	K6	V1 + K6	Reserved

Table 7.4.: Pin assignment of the terminal block with digital inputs for connecting a ripple control receiver

Connection schema

Power limiting to:	Short circuit
0%	Terminals V1 and K1
30%	Terminals V1 and K2
60%	Terminals V1 and K3
100%	Terminals V1 and K4

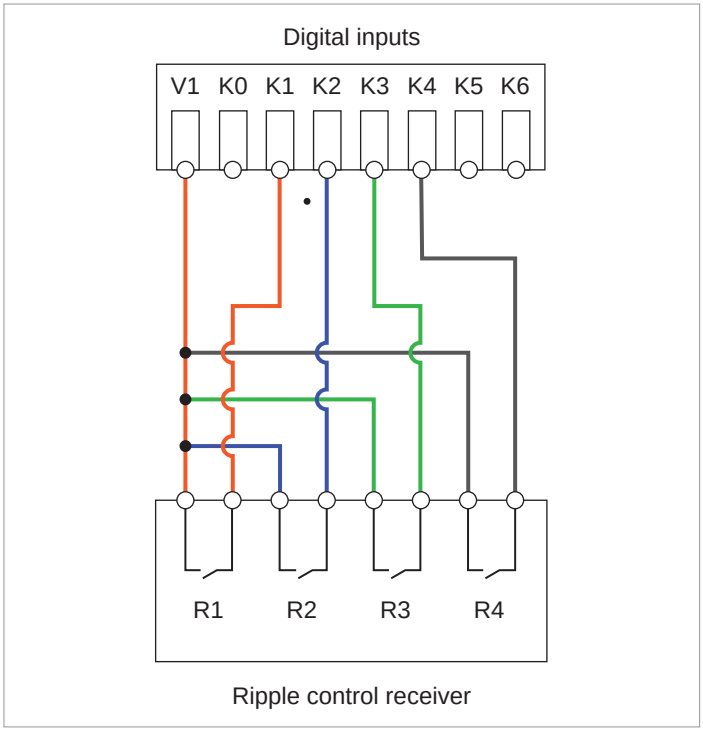

Fig. 7.7: Connection diagram for a ripple control receiver

7.6.6 Connecting the external power-off (EPO)

Pin assignments

Pin	Naming	Short circuit	Assigned action
1	V1	-	-
2	K0	V1 + K0	External power-off (EPO)
3	K1	V1 + K1	Maximum active power limited to 0%
4	K2	V1 + K2	Maximum active power limited to 30%
5	K3	V1 + K3	Maximum active power limited to 60%
6	K4	V1 + K4	Maximum active power limited to 100%
7	K5	V1 + K5	Reserved
8	K6	V1 + K6	Reserved

Table 7.5.: Pin assignment of the terminal block for the external power-off

1. Connect the wires to the terminals V1 and K0.
2. After commissioning, the relay for the external power-off can be defined with Delta Service Software as a normally closed or normally open contact.

7.6.7 Connecting a PC via RS485 (optional)

Note that you must disconnect the PC from the inverter again after commissioning!

Accessories	Description
Standard USB/RS485 adapter	For connecting the PC to the inverter.
Delta Service Software (DSS)	For changing the inverter settings.

To select a suitable USB/RS485 adapter, please contact Delta Customer Service.

You can download the DSS at https://solarsolutions.delta-emea.com.

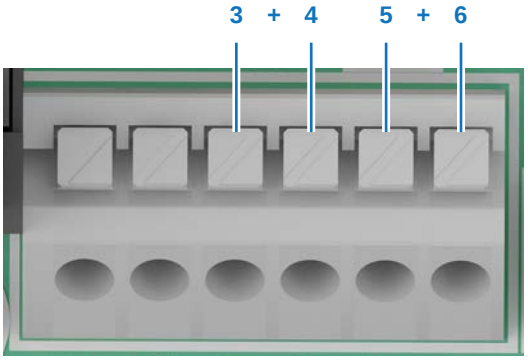

You can use terminal pairs 3+4 or 5+6 to connect the PC.

DATA+	Terminal 3 or 5
DATA–	Terminal 4 or 6

Cable requirements

Bell wire. Both ends open.

7.7 Connecting the grid (AC)

► Always observe the information in section "5.4 Planning the grid connection (AC)", page 37!

7.7.1 General information

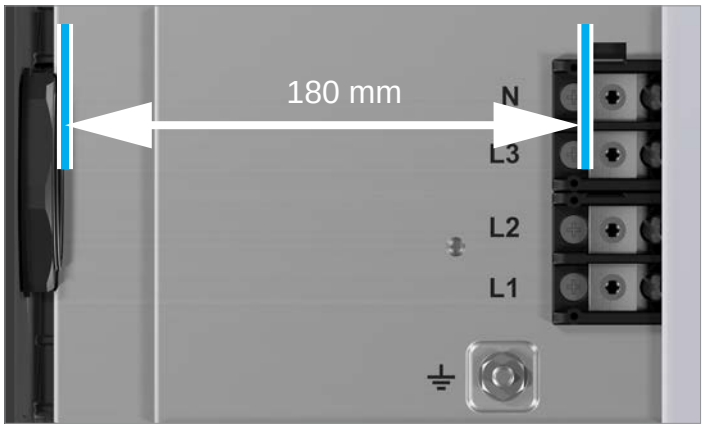

Fig. 7.8: Free space for wiring on the AC terminal block

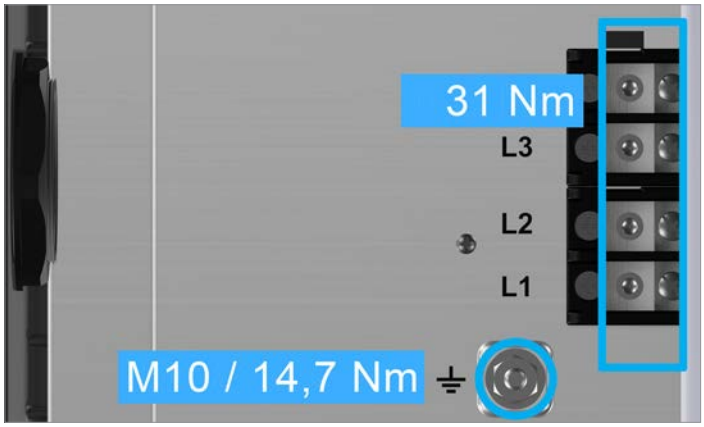

Fig. 7.9: Torques for AC terminal block

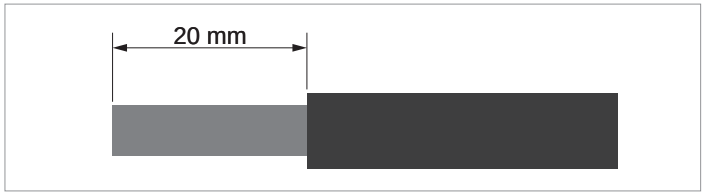

Fig. 7.10: Stripping length for AC cables

7.7.2 Handling aluminum conductors during installation work

► The special properties of aluminum must be taken into consideration when using aluminum conductors:
- Aluminum "flows," i.e. it gives way under pressure.
- A thin non-conductive oxide layer forms within a few minutes on de-insulation, which increases the contact resistance between the conductor and clamping point.
- The specific conductivity and hence the current carrying capacity is approximately one third less than that of copper.

NOTICE

To ensure a safe and reliable contact with aluminum conductors, **always** perform the following work steps:

► Keep the installation location as free as possible from moisture or corrosive atmospheres.
► Connect the aluminum cables quickly.
► Clean the stripped end of the aluminum conductor mechanically (for example, using a knife blade to scrape off the oxide layer), then immediately dip the aluminum conductor into acid-fee and alkaline-free (= neutral) Vaseline and straight away insert it into the Al-Cu compression joint.

7.7.3 Instructions for the use of sector-shaped aluminum cables

When using sector-shaped aluminum cables without Al-Cu compression joints, insert each cable into the clamping point as shown in the picture.

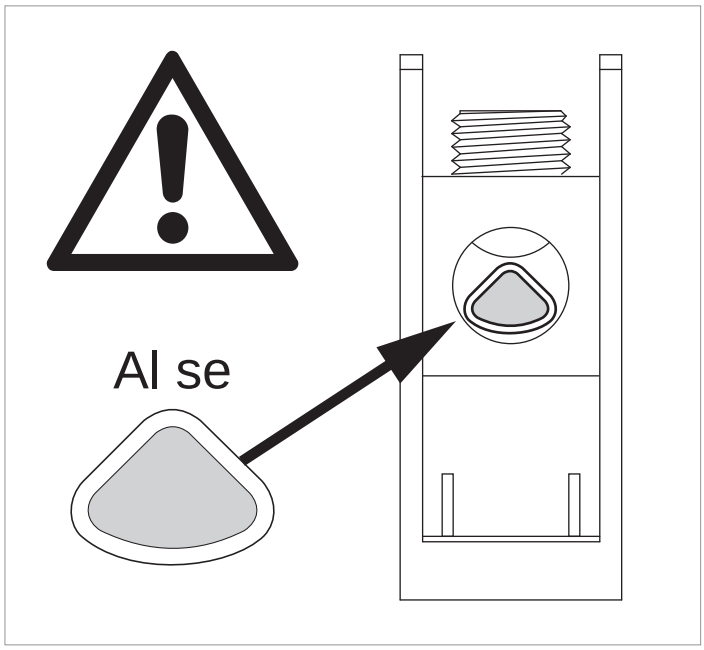

Fig. 7.11: Correct position of sector-shaped aluminum cables (1)

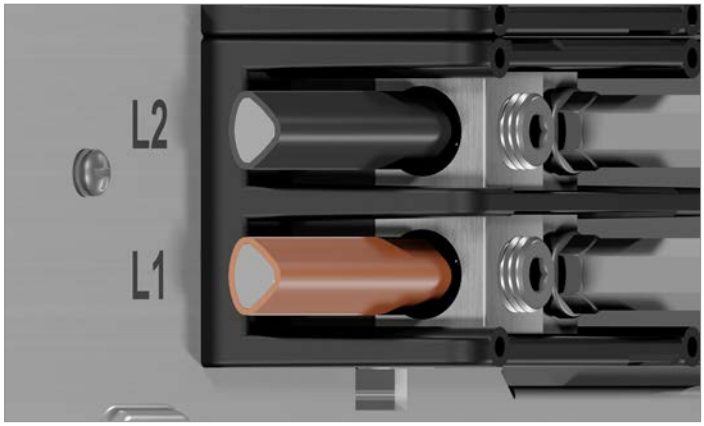

Fig. 7.12: Correct position of sector-shaped aluminum cables (2)

When using sector-shaped aluminum cables with Al-Cu compression joints (e.g. from Klauke, Elpress or Mecatraction), observe the following instructions.

- ► Select compression joints suitable for the type of cable that is used.
- ► Comply with the installation instructions issued by the manufacturer of the compression joints.
- ► Always use heat-shrink sleeving.
- ► Secure the cables with an external strain relief element.

Fig. 7.13: Al-Cu compression joint and heat-shrink sleeving for sector-shaped aluminum cables

7.7.4 Special tools required

Use an insulated torque wrench.

Fig. 7.14: Use an insulated torque spanner for an AC terminal block

7.7.5 AC cable gland

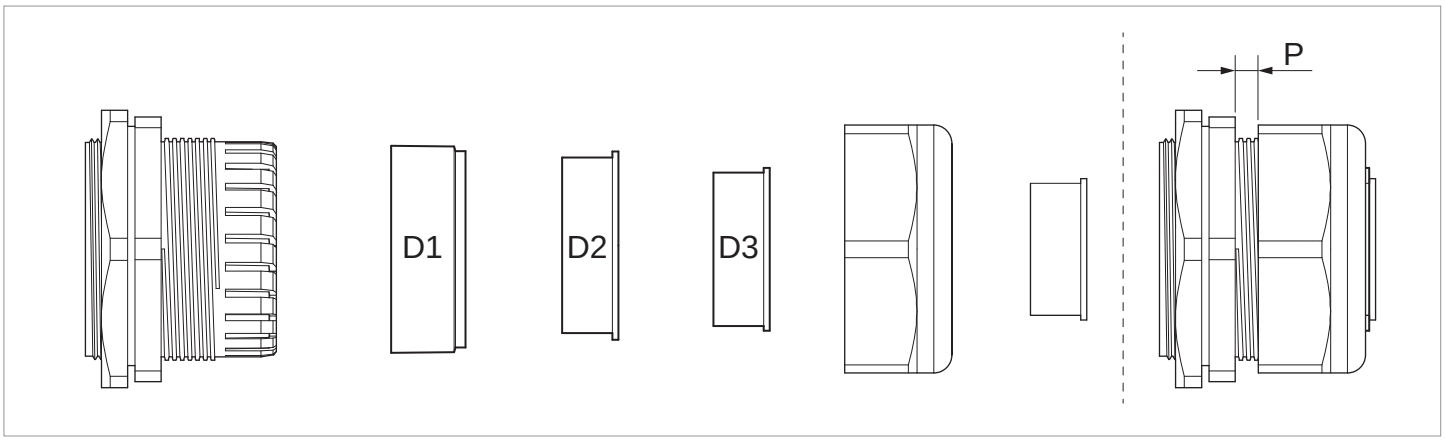

Fig. 7.15: Use of the parts of the AC cable glands depending on the cable diameter

	Cable diameter	Torque	P
D1	30,8 to 44,7 mm	13 Nm	2 mm
D2	26,9 to 35,4 mm	15 Nm	2 mm
D3	21,9 to 27,6 mm	13 Nm	2 mm

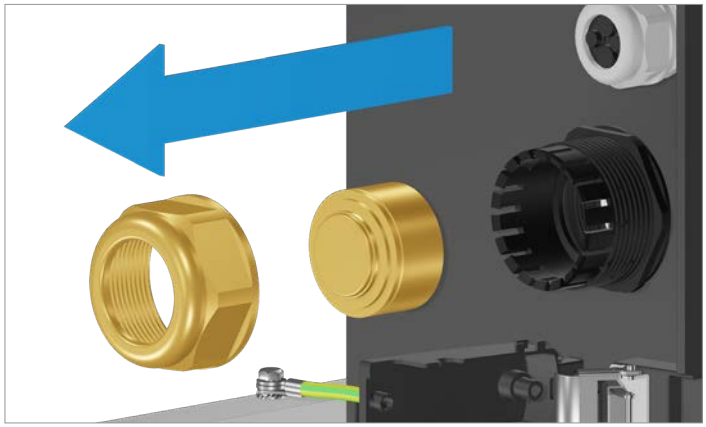

1. Unscrew the cable gland for the AC connection, remove the cable gland and seal.

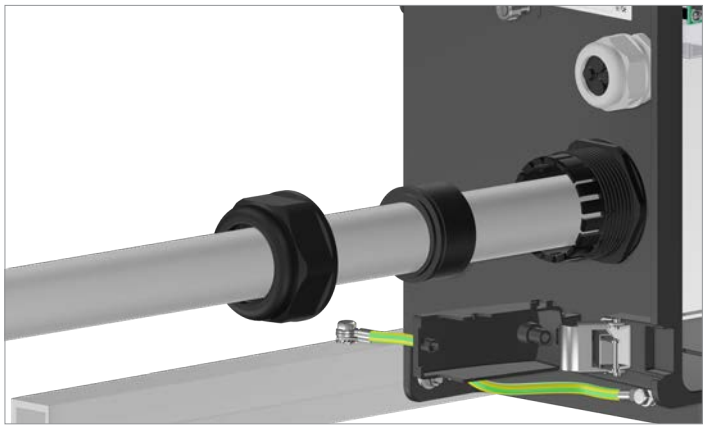

2. Thread the cable through the cable gland and seal.

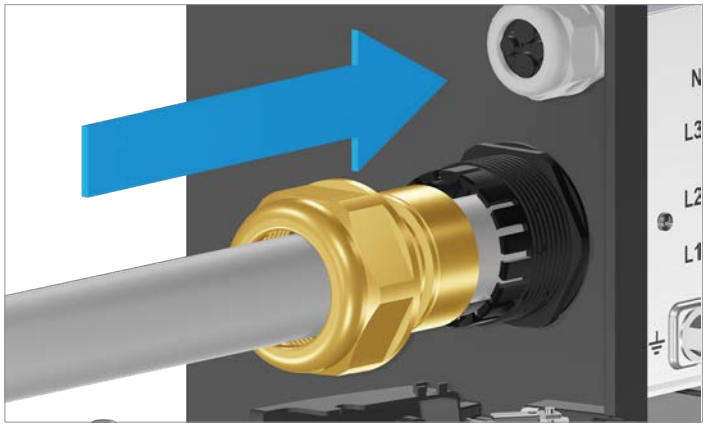

3. Insert the seal and cable gland for the AC connection and screw the cable gland in place.

7.8 Connecting the solar modules (DC)

Special tools required

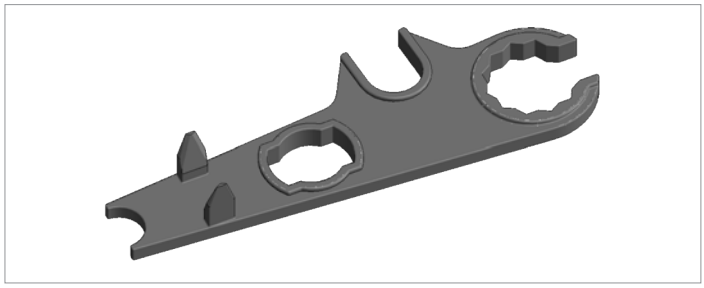

Fig. 7.16: Mounting tools for DC connectors (included in delivery)

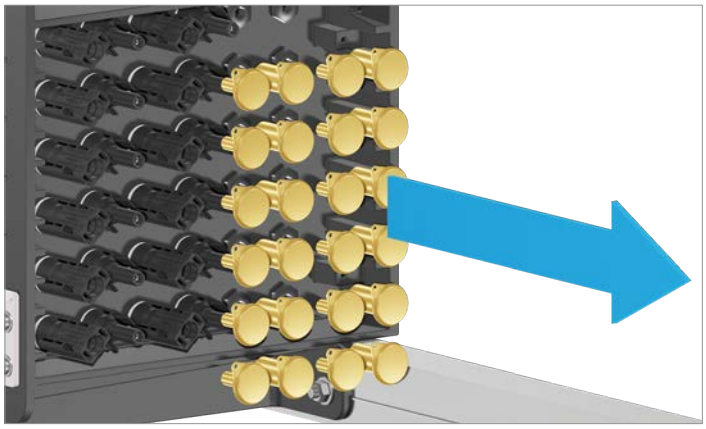

1. Pull out the cover caps of the DC connections.

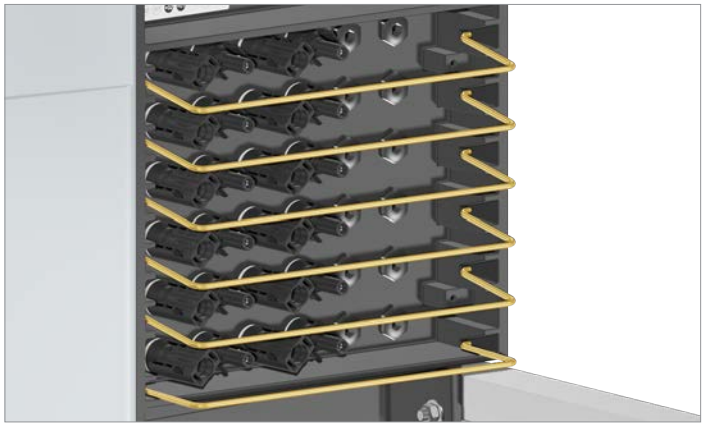

2. Insert the metal brackets to support the DC cables.

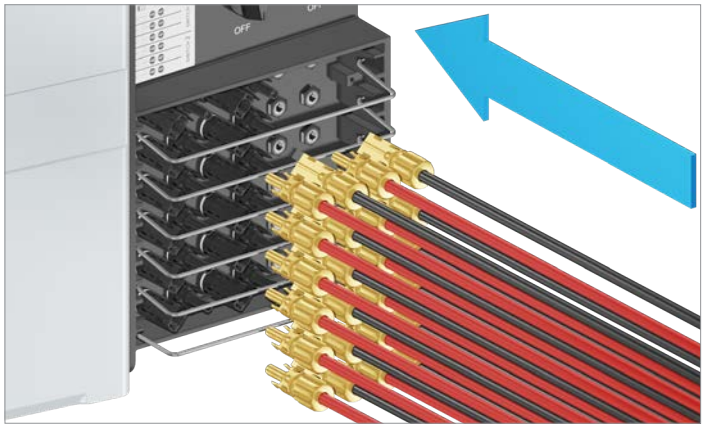

3. Plug in the DC cables.

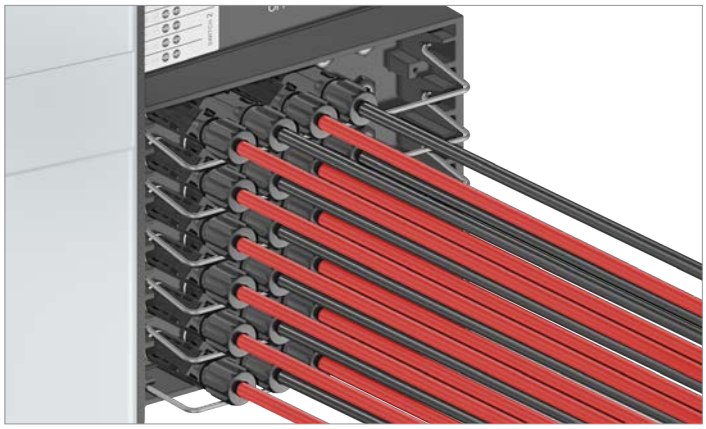

4. The illustration on the left shows how the wiring should look when all DC connections are occupied.

7.9 Completing electrical installation

If you have connected a PC for commissioning (see “7.6.7 Connecting a PC via RS485 (optional)”, page 74), you must disconnect the PC from the inverter again after commissioning (see “8.2 Commissioning with the Delta Service Software (DSS)”, page 83)!

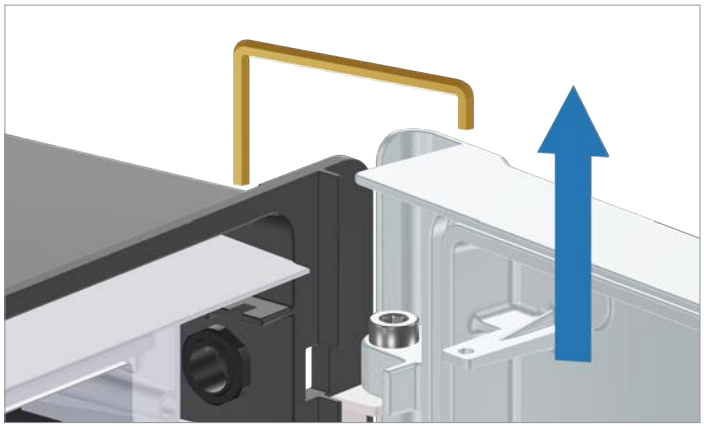

1. Remove the Allen key from the top of the door.

2. Close the door.

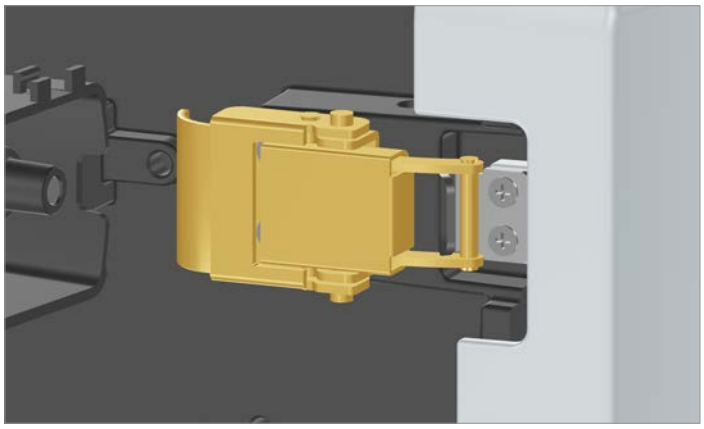

3. Close the upper door latch and screw on the cover.

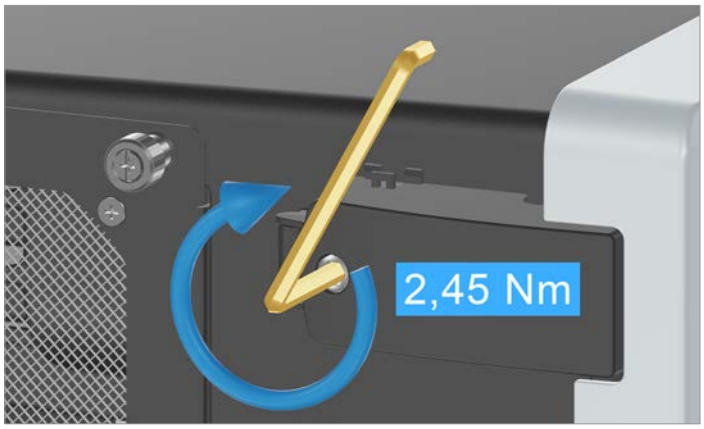

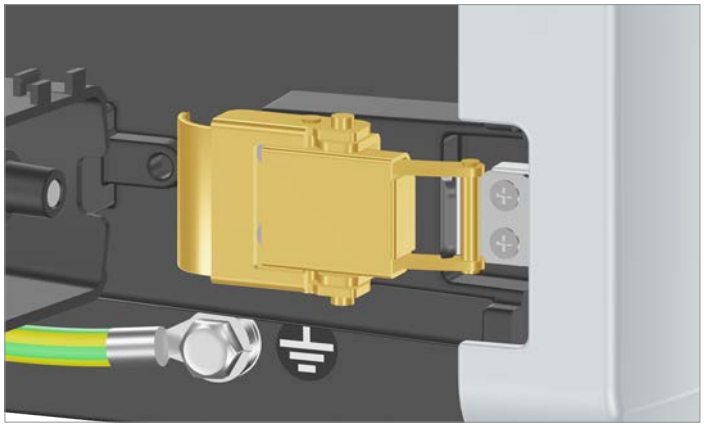

4. Close the upper door latch and screw on the cover.

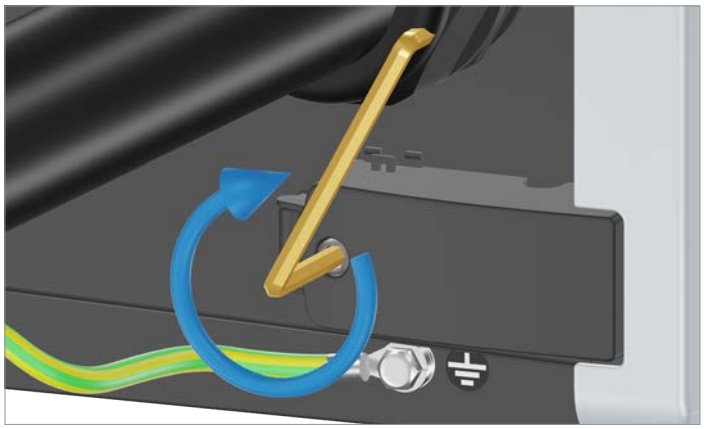

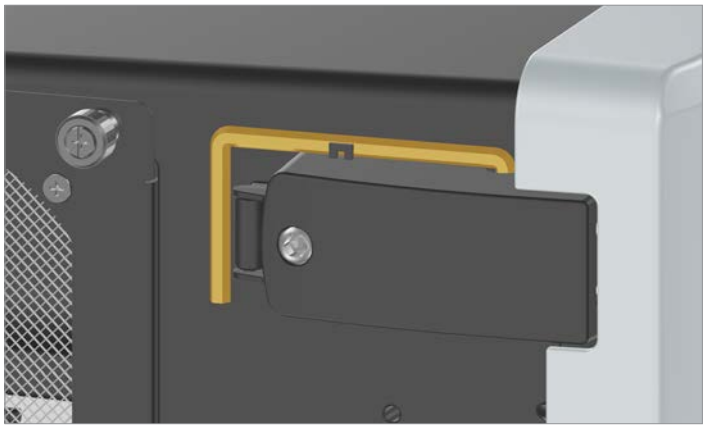

5. Insert the Allen key into the upper door lock.

8. Commissioning

8.1 Prerequisites for commissioning

- All inverters in the system are connected with one another via RS485.
- All inverters are supplied with AC or DC voltage.
- The PC is connected to the RS485 network of the inverters via a USB/RS485 adapter.
- Commissioning the inverter requires a PC with the commissioning software and Delta Service Software (DSS) installed. Both can be downloaded from https://solarsolutions.delta-emea.com/en/Solar-Inverter-Support-171.htm.

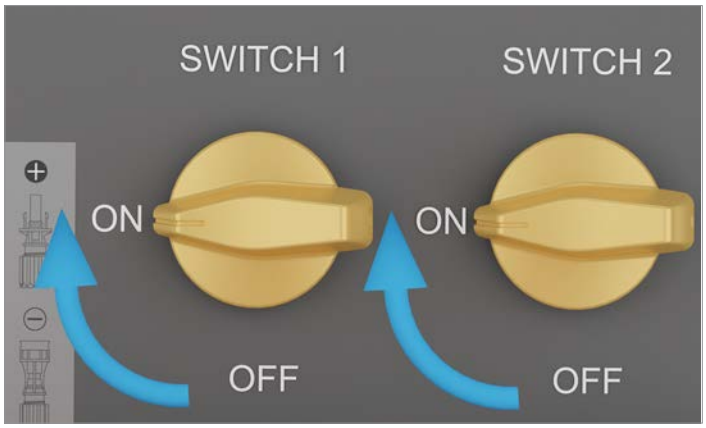

► Turn both DC disconnectores to the ***ON*** position.

8.2 Commissioning with the Delta Service Software (DSS)

Prerequisites

During installation, a Windows PC on which the Delta Service Software is installed was connected to the inverter (see “7.6.7 Connecting a PC via RS485 (optional)”, page 74).

Download link https://solarsolutions.delta-emea.com/en/Solar-Inverter-Support-171.htm

Procedure

► Launch the Delta Service Software and follow the instructions.

8.3 Commissioning with the MyDeltaSolar app

8.3.1 Direct connection between mobile device and inverter

Prerequisites

During installation, the Wi-Fi module was installed on the inverter (see “11.11 Installing/replacing the Wi-Fi module”, page 138).

The MyDeltaSolar app is installed on the mobile device (smartphone, tablet with iOS or Android).

Procedure

1. Launch the MyDeltaSolar app.
2. Follow the instructions in the app to connect your mobile device to the inverter.
3. Once the connection is established, follow the instructions in the commissioning procedure.

8.3.2 Mobile device connected to inverter via DC1 data collector

Prerequisites

The inverter is connected to the DC1 (see “6. Planning the Commissioning”, page 51)

The MyDeltaSolar app is installed on the mobile device (smartphone, tablet with iOS or Android).

1. Launch the MyDeltaSolar app.
2. Follow the instructions in the MyDeltaSolar app to connect your mobile device to the DC1.
3. Once the connection is established, follow the instructions in the commissioning procedure.

9. Error events and troubleshooting

DANGER

Electric shock
Potentially fatal voltages are present in the inverter during operation. When the inverter is disconnected from all power sources, this voltage remains in the inverter for up to 60 seconds.
You should therefore always carry out the following steps before working on the inverter:

1. Turn both DC disconnectores to the ***OFF*** position.
2. Disconnect the inverter from all AC and DC voltage sources and make sure that none of the connections can be restored accidentally.
3. Wait at least 60 seconds for the internal capacitors to discharge.

DANGER

Electric shock
Potentially fatal voltages are present at the DC connections of the inverter. When light falls on the solar modules, they immediately start to generate electricity. This also happens when light does not fall directly on the solar modules.

- ► Never disconnect the inverter from the solar modules when it is under load.
- ► Turn both DC disconnectores to the ***OFF*** position.
- ► Disconnect the connection to the grid so that the inverter cannot feed energy into the grid.
- ► Disconnect the inverter from all AC and DC voltage sources. Make sure that none of the connections can be restored accidentally.
- ► Ensure that the DC cables cannot be touched accidentally.

WARNING

Electric shock
If the doors of the inverter are open, the IP65 degree of protection is no longer guaranteed.

- ► Only open the door when absolutely necessary.
- ► Do not open the door if water or dirt might enter the inverter.
- ► After work is completed, ensure that the door is properly shut and tightened again. Check that the door is properly sealed.

WARNING

Heavy weight
The inverter is heavy.

- ► The inverter must be lifted and carried by at least two people.

WARNING

Hot surfaces
The surface of the inverter can get very hot during operation.

- Always wear safety gloves when touching the inverter.

To read error messages or change parameter settings, you need the Delta Service Software (DSS) or the MyDeltaSolar app.

9.1 Error

Error number	Description	Suggestions for resolution
E01	Mains frequency lies above the ***OFR*** setting (overfrequency detection).	Check the mains frequency.
	Incorrect country or grid type setting.	Check the country and grid type settings.
E02	Mains frequency lies below the ***UFR*** setting (underfrequency detection).	Check the mains frequency.
	Incorrect country or grid type setting.	Check the country and grid type settings.
E07	Non-linear load in the grid and in the vicinity of the inverter.	The grid connection of the inverter must be kept away from non-linear loads; if necessary, move it further away.
		If this error occurs repeatedly, contact Delta Customer Service.
E08	AC cable is not connected correctly.	Check the AC cable connection.
E09	There is normally an external load isolating switch between the inverter and the mains (e.g. in an equipment terminal box). This is used to isolate the inverter from the mains and to shut off its AC voltage supply.	Check that the external load isolating switch is closed.
	AC cable is not connected correctly.	Check the AC cable connection.
E10, E15, E20	Grid voltage lies below the ***UVR*** setting (undervoltage detection).	Check the grid voltage connection at the inverter terminals.
	Incorrect country or grid type setting.	Check the country and grid type settings.
	AC cable is not connected correctly.	Check that the AC cable is connected correctly.
E11, E13, E16, E18, E21, E23	Mains voltage lies above the ***OVR*** setting (overvoltage detection).	Check the mains voltage.
	Supply voltage during operation is greater than the ***OVR Langs.*** setting.	Check the mains voltage.
	Incorrect country or grid type setting.	Check the country and grid type settings.
E30	The DC input voltage is too high.	Design the module strings so that the DC input voltage is below the maximum permissible DC input voltage.
E34	Insulation fault in the PV system.	Check the insulation of the DC inputs.
	Large PV system capacitance between Plus and Ground or Minus and Ground or both.	Check the capacity. Dry the PV modules if necessary.

9.2 Warnings

Warning number	Description	Suggestions for resolution
W01	DC input voltage is too low.	Check the DC input voltage on the inverter display. There may be insufficient solar radiation.
W07	The inverter is not delivering the expected power. This can have several causes:	
	The temperature is too high.	Check the ambient conditions ((e.g. air circulation).
	A power limit has been set.	Change the power limit settings.
	The "Active power control via mains frequency" function is active and has regulated the active power.	Check the mains frequency.
	The "Active power control via mains voltage" function is active and has regulated the active power.	Check the mains voltage.
	The mains voltage is too low.	Check the mains voltage.
	The solar voltage is too low or too high.	Check the solar voltage.
W08	The polarity of the DC string is reversed.	Connect the DC strings correctly.
	The string monitoring circuit is defective.	Contact Delta Customer Service.
W11	One or more fans are blocked.	Clean or replace the fans if necessary.
	One or more fans are defective.	Replace the defective fans.
	One or more fans are disconnected from the power supply.	Check the power supply connections of the fans.
W17	A lightning bolt has struck in the vicinity of the inverter and the DC surge protection devices have tripped.	Check on the inverter whether the DC surge protection devices have tripped. If yes, replace the card with the DC surge protection devices.
	One or more DC surge protection devices are defective.	Replace the card with the DC surge protection devices.
	The card containing the DC surge protection devices is not inserted correctly, fastening screws are missing or the fastening screws are not tightened correctly.	Check that the card is seated correctly. Check that there are no missing screws. Tighten all screws.
	The signal cable is not inserted correctly.	Check that the signal cable is inserted correctly.
W18	A lightning bolt has struck in the vicinity of the inverter and the AC surge protection devices have tripped.	Check on the inverter whether the DC surge protection devices have tripped. If yes, replace the card with the DC surge protection devices.
	One or more AC surge protection devices are defective.	Replace the card with the DC surge protection devices.
	The card containing the DC surge protection devices is not inserted correctly, fastening screws are missing or the fastening screws are not tightened correctly.	Check that the card is seated correctly. Check that there are no missing screws. Tighten all screws.
	The signal cable is not inserted correctly.	Check that the signal cable is inserted correctly.

9.3 Faults

Fault number	Possible causes	Suggestions for resolution
F01, F02, F03	The grid waveform is abnormal.	Contact Delta Customer Service.
	Internal error.	Contact Delta Customer Service.
F05	The ambient temperature is > 60 °C.	Check the system environment.
F06, F08, F09, F10	The ambient temperature is > 90 °C or < -30 °C.	Check the system environment.
	Detection circuit malfunction.	Contact Delta Customer Service.
F07	The ambient temperature is < -30 °C.	Check the system environment.
	Internal error.	Contact Delta Customer Service.
F13, F29	Internal error.	Contact Delta Customer Service.
F15, F16, F17	The DC input voltage is less than the minimum required DC input voltage.	Check the DC input voltage on the inverter display. There may be insufficient solar radiation.
	Internal error.	Contact Delta Customer Service.
F18, F19	The DC input voltage is less than the minimum required DC input voltage.	Check the DC input voltage on the inverter display. There may be insufficient solar radiation.
	Internal error.	Contact Delta Customer Service.
F20	Incorrect calibration.	Check the accuracy of the voltage and power.
	Internal error.	Contact Delta Customer Service.
F22	Internal error.	Contact Delta Customer Service.
F23	Internal error.	Contact Delta Customer Service.
F24	Insulation fault in the PV system.	Check the insulation of the DC inputs.
	Large PV system capacitance between Plus and Ground or Minus and Ground.	Check the capacitance, it must be < 12 µF. Install an external transformer if necessary.
	Internal error.	Contact Delta Customer Service.
F26	Internal error.	Contact Delta Customer Service.
F27	Internal error.	Contact Delta Customer Service.
F28	Internal error.	Contact Delta Customer Service.
	Fault in the relay driver circuit.	Contact Delta Customer Service.
F30	Incomplete independent or parallel configuration between the inputs.	Check the input connections.
	Grounding of the PV system.	Check the insulation of the PV system.
	Internal error.	Contact Delta Customer Service.
F31, F33, F35	The DC input voltage is greater than the maximum permissible DC input voltage.	Change the solar system setting so that the DC input voltage at DC1 is below the maximum permissible DC input voltage.
	Overvoltage during operation.	Contact Delta Customer Service.
	Internal error.	Contact Delta Customer Service.
F36, F37, F38, F39, F40, F41	Overvoltage during operation.	Contact Delta Customer Service.
	Internal error.	Contact Delta Customer Service.

Fault number	Possible causes	Suggestions for resolution
F42	Internal error.	Contact Delta Customer Service.
F43	Internal error.	Contact Delta Customer Service.
F44	Internal error.	Contact Delta Customer Service.
F45	Large grid harmonics.	Check the grid waveform. The grid connection of the inverter must be kept away from non-linear loads; if necessary, move it further away.
	Internal error.	Contact Delta Customer Service.
F50	Internal error.	Contact Delta Customer Service.
F60, F61, F70, F71	Internal error.	Contact Delta Customer Service.

10. Disconnecting the inverter from the power supply before working on it

Before carrying out any work on the inverter, carry out the steps described in this chapter! Always follow the specified sequence!

To complete all work on the inverter, carry out the work steps described in the chapter "12. Recommissioning the inverter after work", page 142.

10.1 Safety Instructions

DANGER

Electric shock
Potentially fatal voltages are present in the inverter during operation. When the inverter is disconnected from all power sources, this voltage remains in the inverter for up to 60 seconds.
You should therefore always carry out the following steps before working on the inverter:

1. Turn both DC disconnectores to the ***OFF*** position.
2. Disconnect the inverter from all AC and DC voltage sources and make sure that none of the connections can be restored accidentally.
3. Wait at least 60 seconds for the internal capacitors to discharge.

DANGER

Electric shock
Potentially fatal voltages are present at the DC connections of the inverter. When light falls on the solar modules, they immediately start to generate electricity. This also happens when light does not fall directly on the solar modules.

- ► Never disconnect the inverter from the solar modules when it is under load.
- ► Turn both DC disconnectores to the ***OFF*** position.
- ► Disconnect the connection to the grid so that the inverter cannot feed energy into the grid.
- ► Disconnect the inverter from all AC and DC voltage sources. Make sure that none of the connections can be restored accidentally.
- ► Ensure that the DC cables cannot be touched accidentally.

DANGER

Electric shock
The inverter has a high leakage current value.

- ► **Always** connect the ground cable first, then the AC and DC cables.

WARNING

Electric shock
The IP65 protection degree is no longer guaranteed when the door is open.

- ► Only open the door when absolutely necessary.
- ► Do not open the door if water or dirt might enter the inverter.
- ► After work is completed, ensure that the door is properly shut and tightened again. Check that the door is properly sealed.

WARNING

Heavy weight
The inverter is heavy.

- ► Lift and carry the inverter with at least 2 people.

WARNING

Hot surfaces
The surface of the inverter can get very hot during operation.

- Always wear safety gloves when touching the inverter.

All work described in this section must only be carried out by electrical installers who are trained and approved for work on grid-connected solar inverters.

10.2 Procedure

1. To shut off the inverter at the grid, open the load-break switch between the inverter and the grid connection point.

   Secure the load-break switch to prevent it from being switched back on.

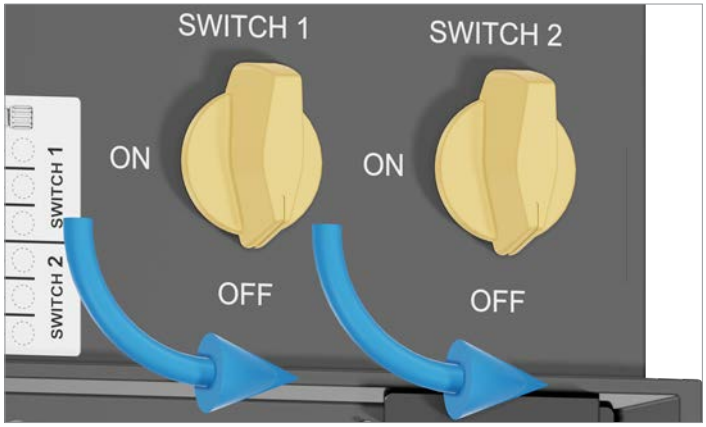

2. Turn both DC disconnectores to the ***OFF*** position.

3. Wait at least 60 seconds until the internal capacitors have discharged.

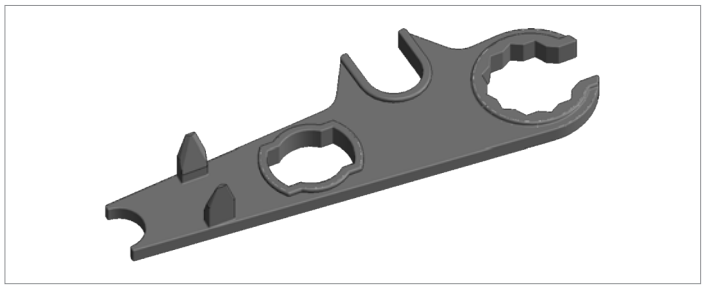

Always use the supplied mounting tools to open the DC connectors.

When disconnecting the DC cables, take care not to damage the connectors.

Do not use force.

Pull out at the DC connector, **not** at the DC cable.

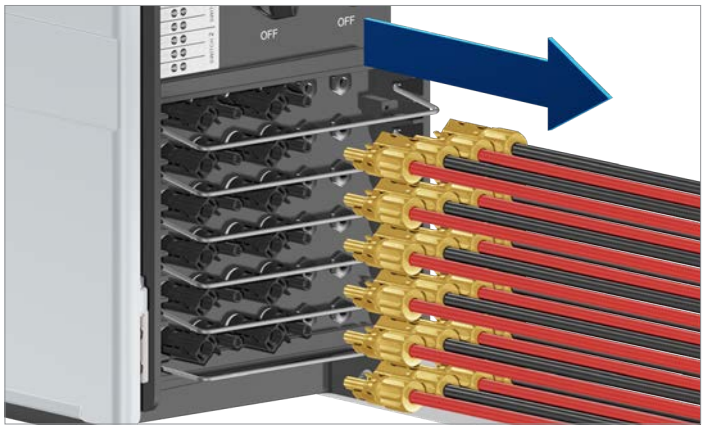

4. Use the mounting tool to release the DC cables and then pull them out.

Procedure

5. Remove the Allen key from the upper door lock.

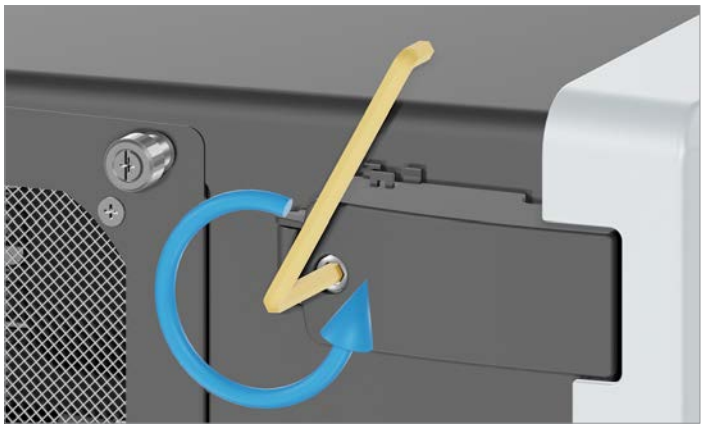

6. Unscrew and open the upper door lock cover.

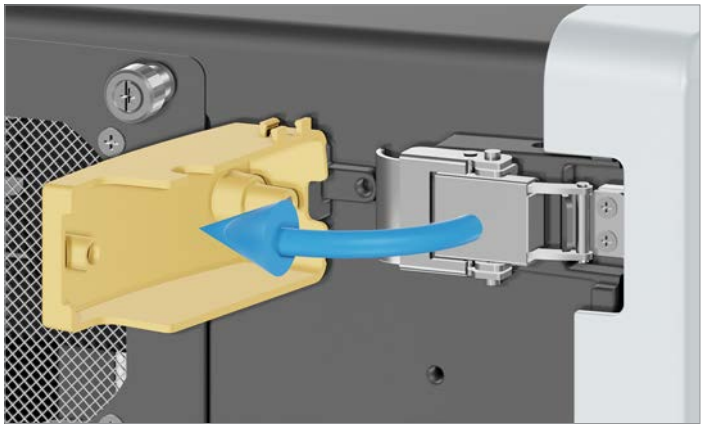

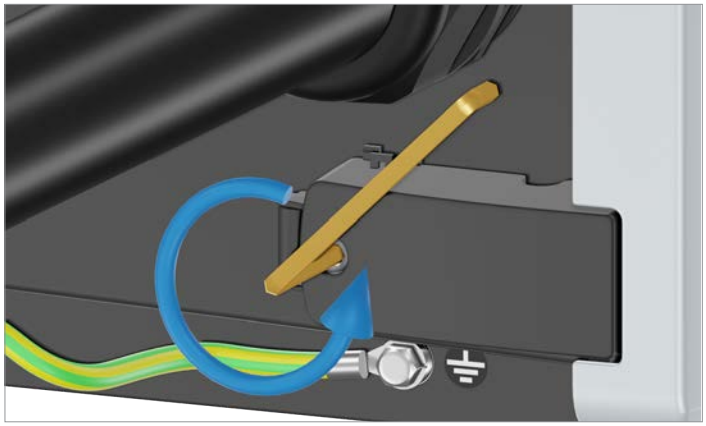

7. Unscrew and open the lower door lock cover.

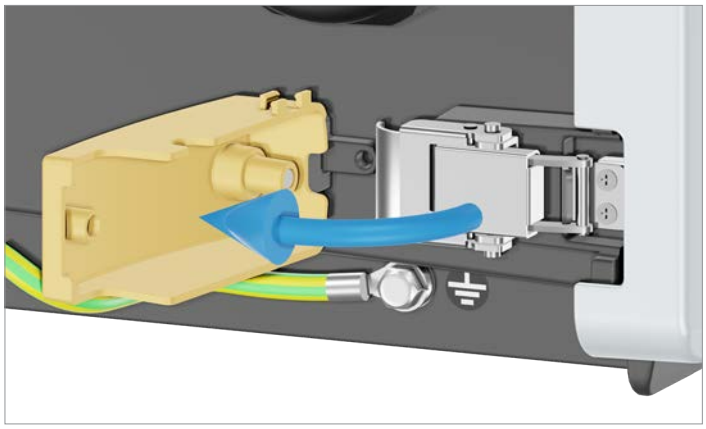

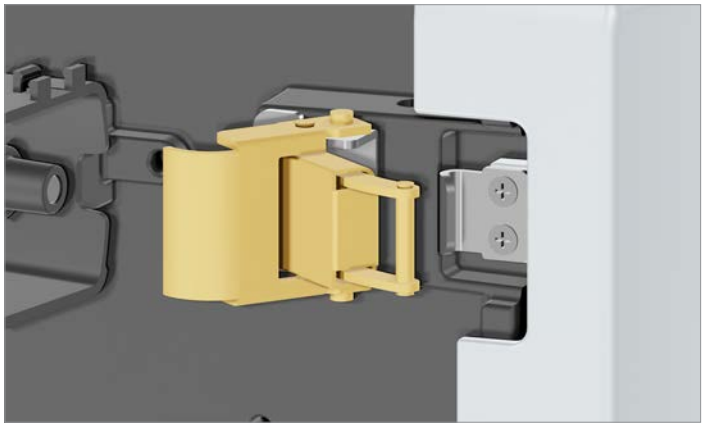

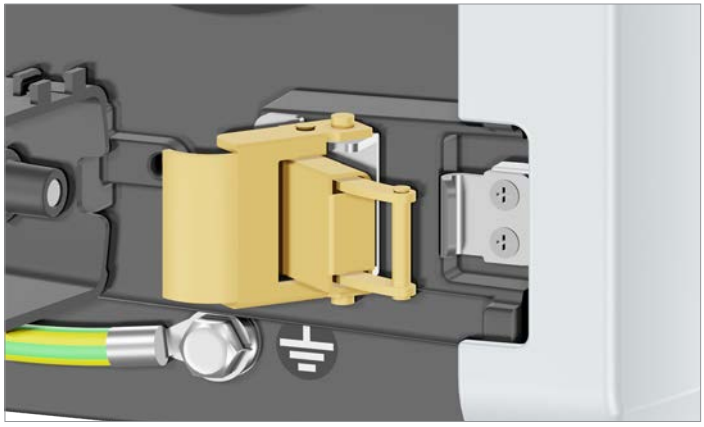

8. Open the upper and lower door lock.

9. Open the door and secure it on top with the Allen key.

10. Use a voltmeter to check that there is no more voltage at the AC terminal block.
    → If you detect voltage, open the AC power external load isolating switch.
    → If you detect no voltage, continue to the next step.

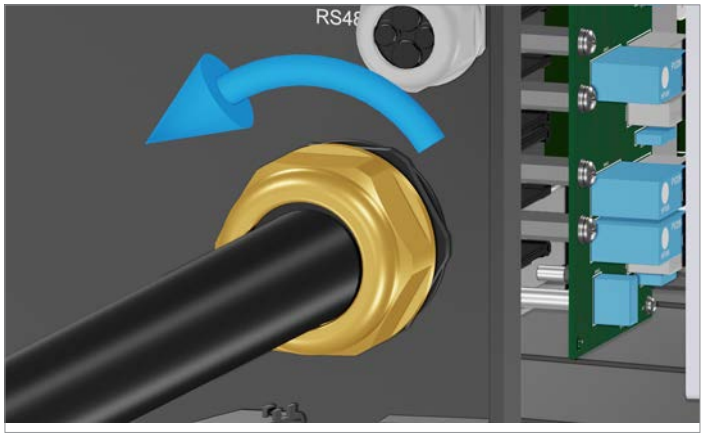

11. Unscrew the AC cable gland.

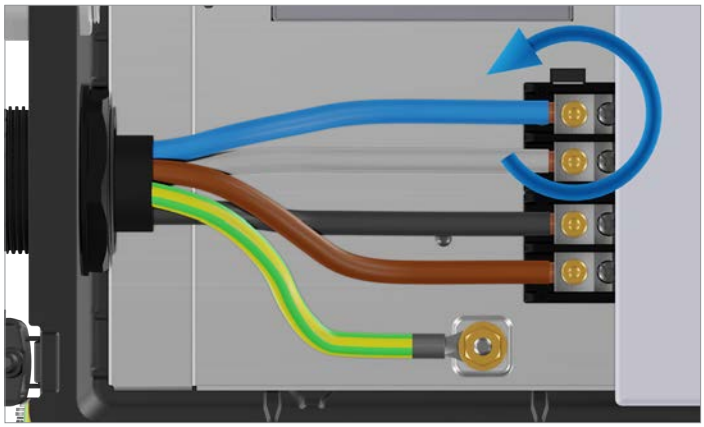

12. Unscrew the conductors of the AC cable and pull out the AC cable.

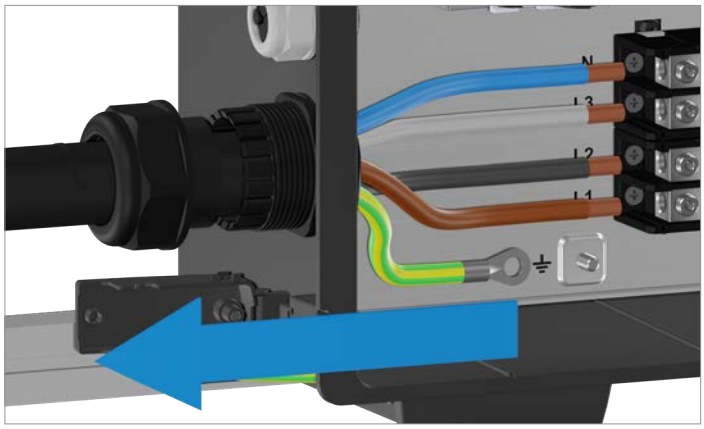
N
L3
L2
L1

11. Replacing or cleaning components, installing accessories

Before carrying out any work on the inverter, carry out the work steps described in the chapter “10. Disconnecting the inverter from the power supply before working on it”, page 90!

To complete all work on the inverter, carry out the work steps described in the chapter “12. Recommissioning the inverter after work”, page 142.

Overview

11.1 Safety Instructions . . . 97

11.2 General information. . . . 98

11.3 Clean/replace internal fan 1 . . . 99

11.4 Clean/replace internal fan 2 . . . 103

11.5 Cleaning/replacing the fan module . . . 108

11.6 Cleaning the air outlets . . . 112

11.7 Installing/replacing DC surge protection devices . . . 114
11.7.1 Remove the DC surge protection device . . . 114
11.7.2 Transfer the screws for the new DC surge protection devices . . . 117
11.7.3 Install DC surge protection devices . . . 119

11.8 Installing/replacing type 1+2 combined AC surge protection devices . . . 121
11.8.1 Notes . . . 121
11.8.2 Remove the type 1+2 combined AC surge protection device . . . 121
11.8.3 Transfer screws for the new type 1+2 combined AC surge protection devices . . . 124
11.8.4 Install the type 1+2 combined AC Surge protection device . . . 125

11.9 Installing/replacing type 2 combined AC surge protection devices . . . 128
11.9.1 Notes . . . 128
11.9.2 Removing type 2 AC surge protection devices . . . 128
11.9.3 Transfer screws for the new type 2 AC surge protection devices . . . 131
11.9.4 Installing type 2 AC surge protection devices . . . 132

11.10 Installing/replacing the Sub-1G antenna . . . 134
11.10.1 Notes . . . 134
11.10.2 Removing the Sub-1G antenna . . . 134
11.10.3 Installing the Sub-1G antenna . . . 135

11.11 Installing/replacing the Wi-Fi module . . . 138
11.11.1 Notes . . . 138
11.11.2 Removing the Wi-Fi module . . . 138
11.11.3 Installing the Wi-Fi module . . . 140

11.1 Safety Instructions

DANGER

Electric shock
Potentially fatal voltages are present in the inverter during operation. When the inverter is disconnected from all power sources, this voltage remains in the inverter for up to 60 seconds.
You should therefore always carry out the following steps before working on the inverter:

1. Turn both DC disconnectores to the ***OFF*** position.
2. Disconnect the inverter from all AC and DC voltage sources and make sure that none of the connections can be restored accidentally.
3. Wait at least 60 seconds for the internal capacitors to discharge.

DANGER

Electric shock
Potentially fatal voltages are present at the DC connections of the inverter. When light falls on the solar modules, they immediately start to generate electricity. This also happens when light does not fall directly on the solar modules.

- ► Never disconnect the inverter from the solar modules when it is under load.
- ► Turn both DC disconnectores to the ***OFF*** position.
- ► Disconnect the connection to the grid so that the inverter cannot feed energy into the grid.
- ► Disconnect the inverter from all AC and DC voltage sources. Make sure that none of the connections can be restored accidentally.
- ► Ensure that the DC cables cannot be touched accidentally.

DANGER

Electric shock
The inverter has a high leakage current value.

- ► **Always** connect the ground cable first, then the AC and DC cables.

WARNING

Electric shock
The IP65 protection degree is no longer guaranteed when the door is open.

- ► Only open the door when absolutely necessary.
- ► Do not open the door if water or dirt might enter the inverter.
- ► After work is completed, ensure that the door is properly shut and tightened again. Check that the door is properly sealed.

WARNING

Heavy weight
The inverter is heavy.

- ► Lift and carry the inverter with at least 2 people.

WARNING

Hot surfaces
The surface of the inverter can get very hot during operation.

- Always wear safety gloves when touching the inverter.

All work described in this section must only be carried out by electrical installers who are trained and approved for work on grid-connected solar inverters.

11.2 General information

For the following work, the inverter must be disconnected from the power supply.

- Clean/replace internal fans
- Cleaning/replacing the fan module
- Replacing the DC surge protection devices
- Replacing the AC surge protection devices
- Replacing the Wi-Fi module

Perform the instructions listed in chapter “10. Disconnecting the inverter from the power supply before working on it”, page 90 **before** you start work on the inverter!

The following work can be carried out on a running inverter.

- Cleaning the air outlets
- Replacing the Sub-1G antenna

11.3 Clean/replace internal fan 1

DANGER

Electric shock
Potentially fatal voltages are present in the inverter during operation. When the inverter is disconnected from all power sources, this voltage remains in the inverter for up to 60 seconds.

► Perform the instructions listed in chapter "10. Disconnecting the inverter from the power supply before working on it", page 90**before** you start work on the inverter!

Do not use any sharp, pointed or hard objects for cleaning.

Do not use liquids for cleaning.

The screws are very small and can easily fall down. You should therefore use a magnetic screwdriver.

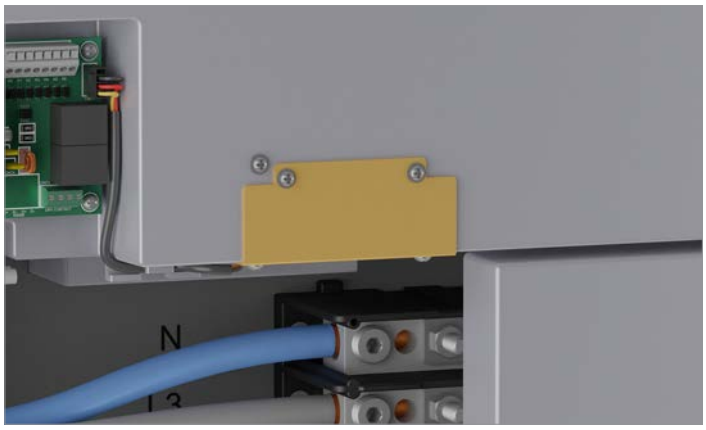

Position of internal fan 1

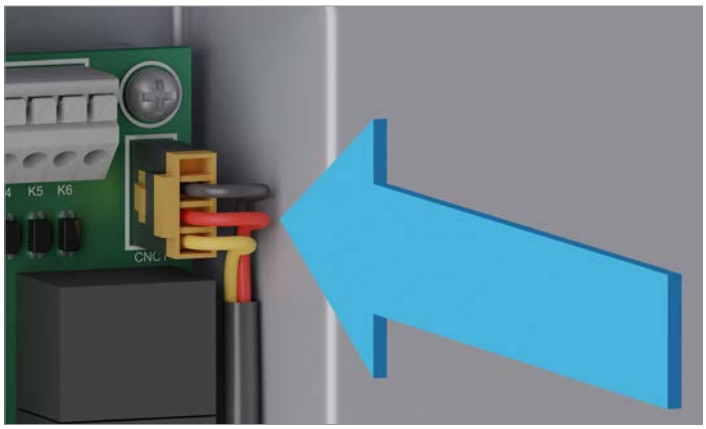

1. Pull out the power supply cable plug located on the top right of the communication card

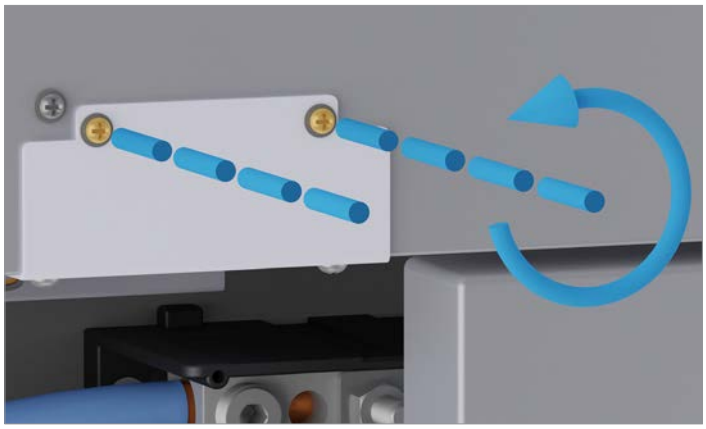

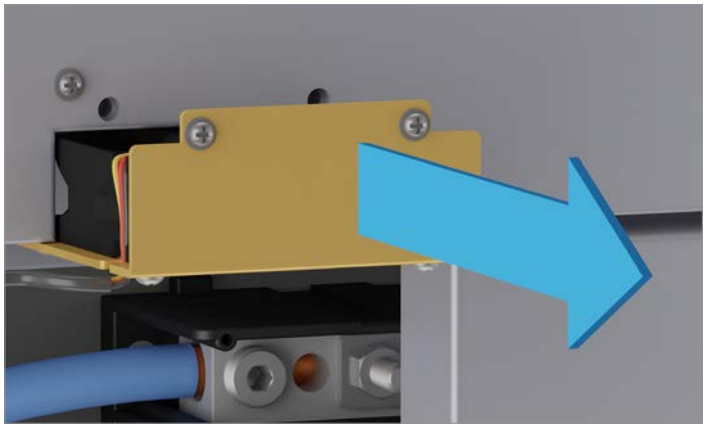

2. Unscrew and pull out the cover. The fan is screwed onto the cover.

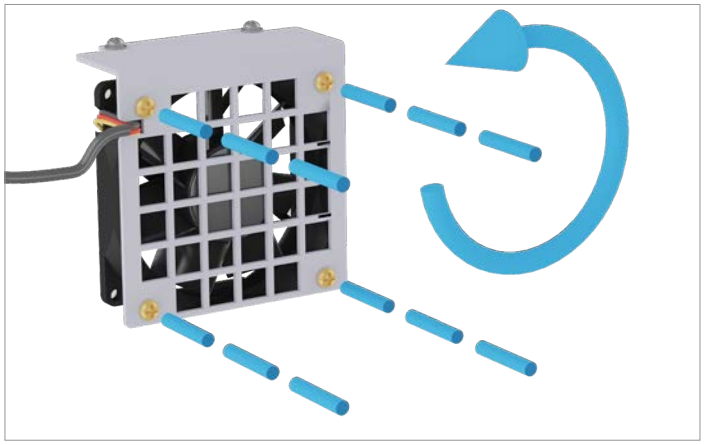

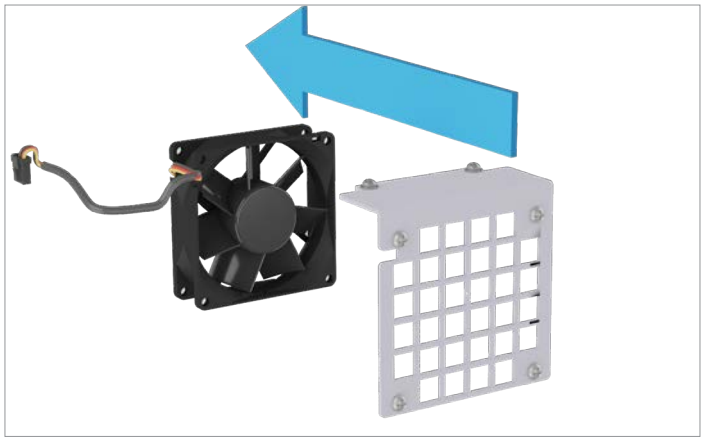

This work step must only be carried out if the fan is to be replaced. The work step is not necessary for cleaning the fan.

3. Unscrew the fan from the cover and pull it out.

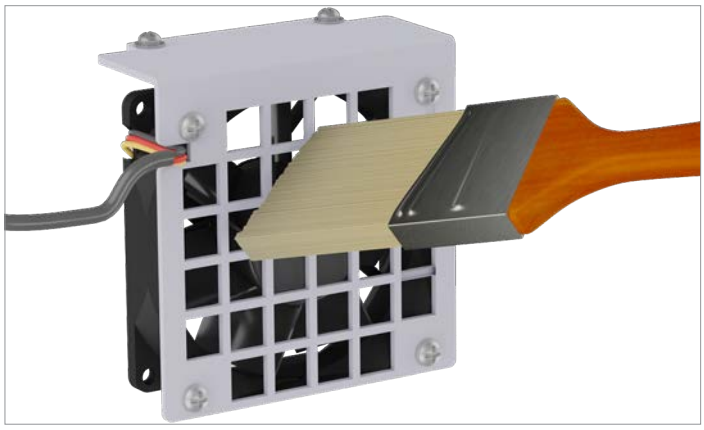

4. Clean the fan and metal housing with compressed air or a firm brush.

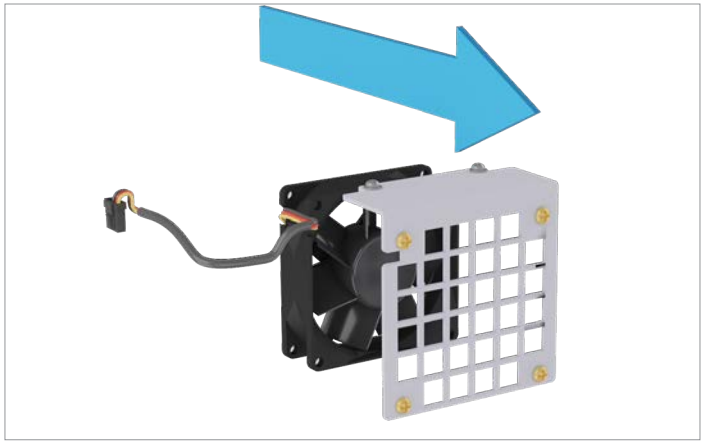

This work step must only be carried out if the fan is to be replaced. The work step is not necessary for cleaning the fan.

5. Insert and screw the fan into the cover.

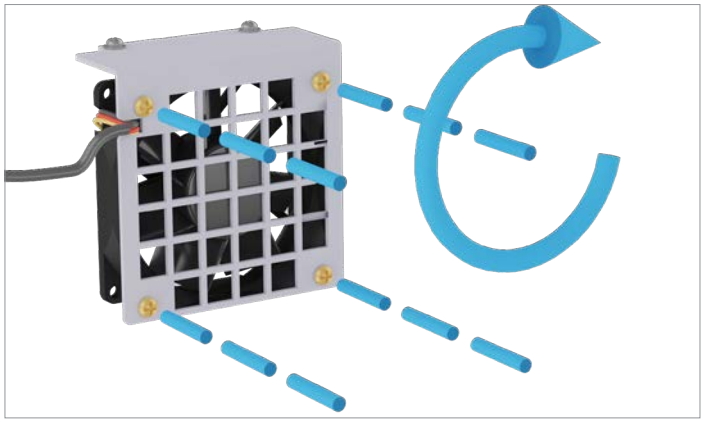

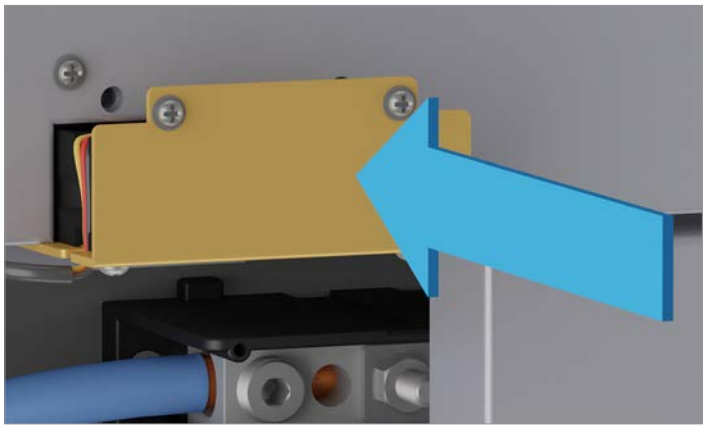

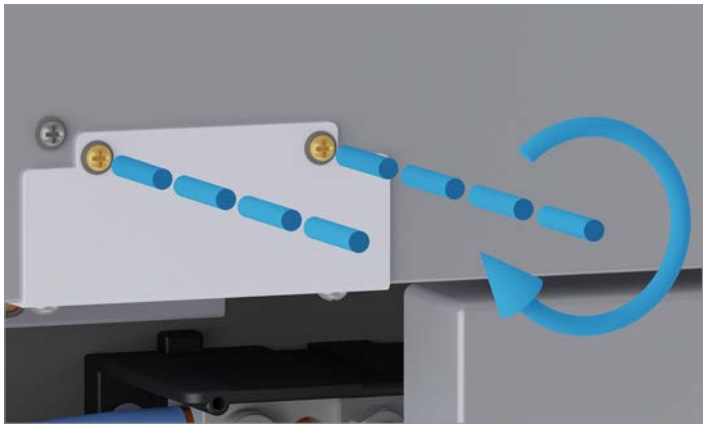

6. Insert the cover with the fan attached and screw the cover in place.

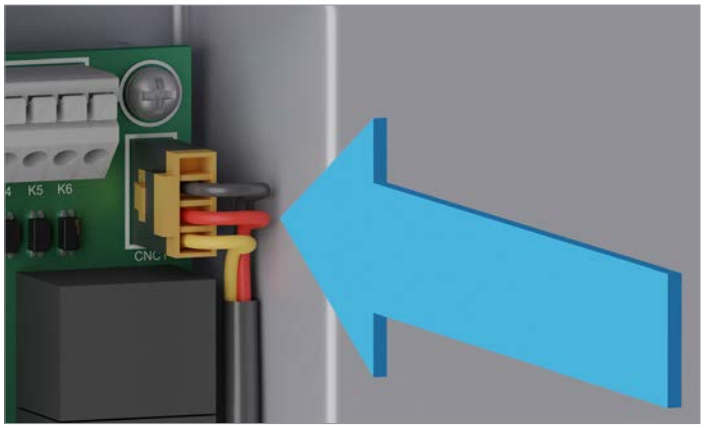

7. Plug in the power supply cable plug.

8. To complete the work, follow the instructions in the chapter “12. Recommissioning the inverter after work”, page 142.

11.4 Clean/replace internal fan 2

DANGER

Electric shock
Potentially fatal voltages are present in the inverter during operation. When the inverter is disconnected from all power sources, this voltage remains in the inverter for up to 60 seconds.

► Perform the instructions listed in chapter "10. Disconnecting the inverter from the power supply before working on it", page 90 **before** you start work on the inverter!

Do not use any sharp, pointed or hard objects for cleaning.

Do not use liquids for cleaning.

The screws are very small and can easily fall down. You should therefore use a magnetic screwdriver.

Position of internal fan 2

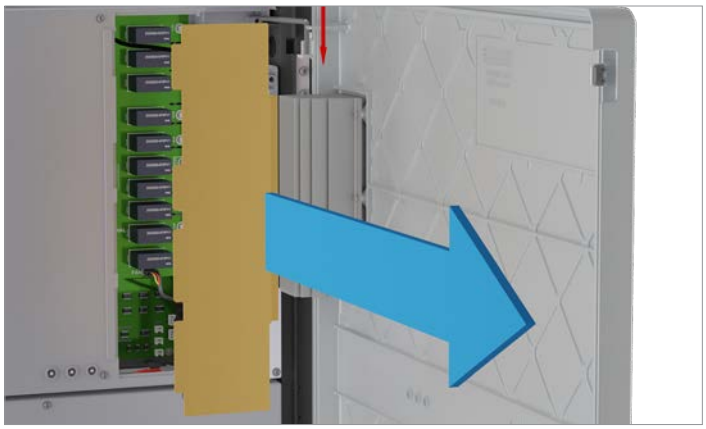

1. Remove the protective cover from the DC surge protection devices.

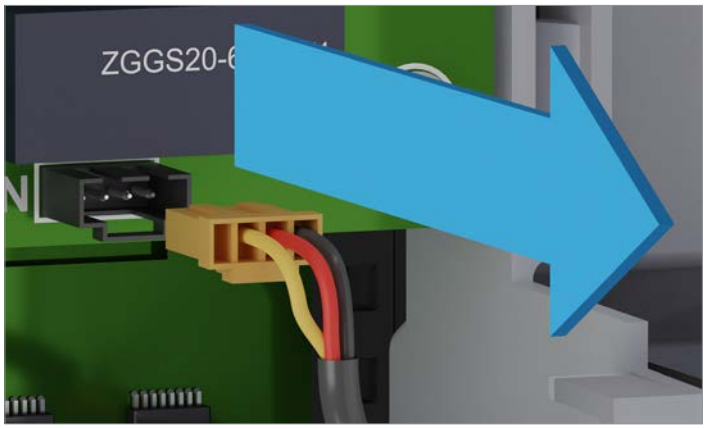

2. Pull out the power supply cable plug located on the bottom of the card with the DC surge protection devices.

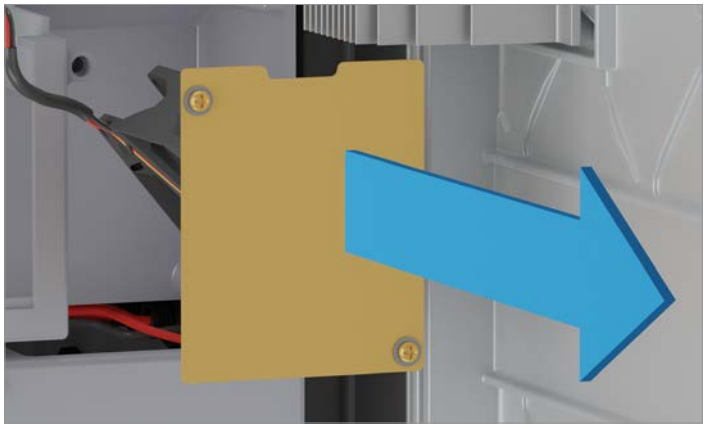

3. Unscrew and pull out the cover. The fan is screwed onto the cover.

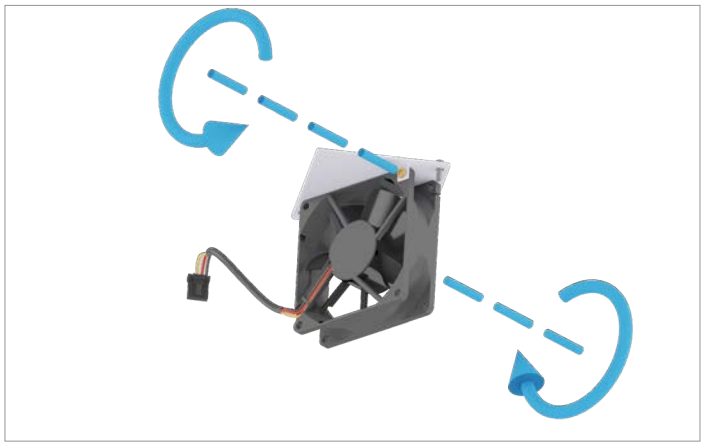

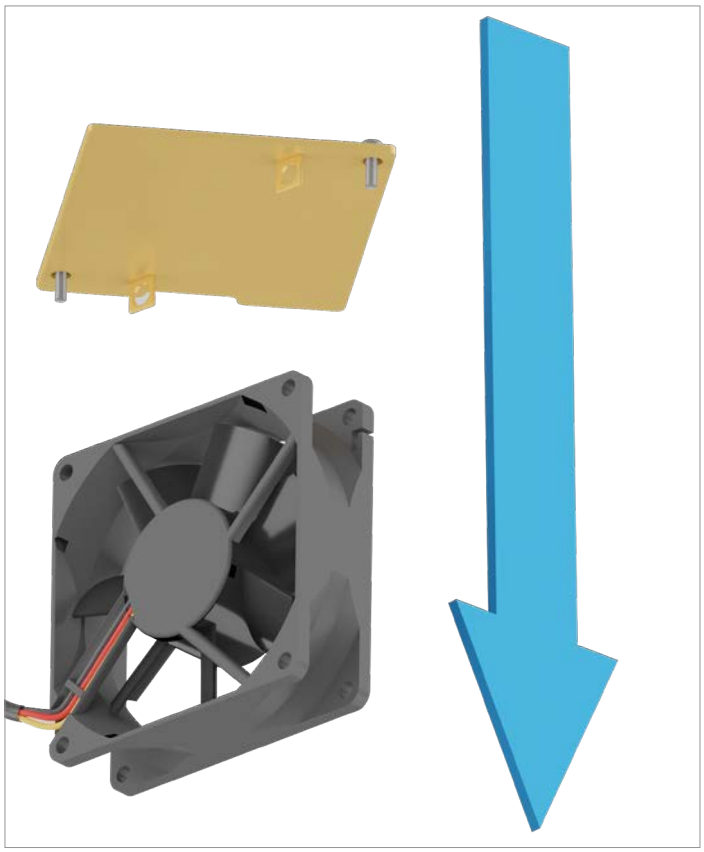

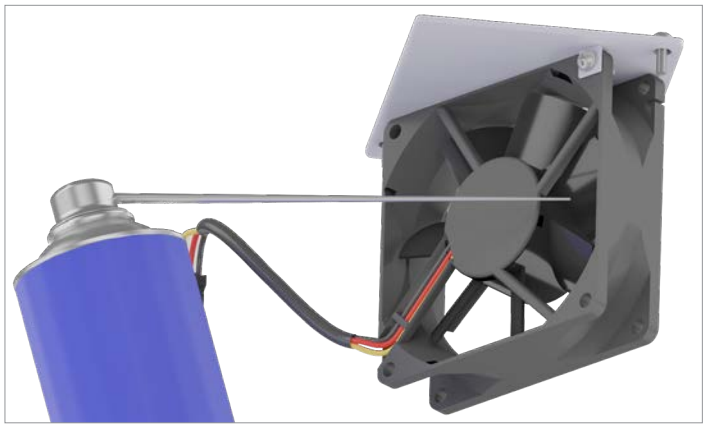

This work step must only be carried out if the fan is to be replaced. The work step is not necessary for cleaning the fan.

4. Unscrew the fan from the cover and pull it out.

5. Clean the fan and metal housing with compressed air or a firm brush.

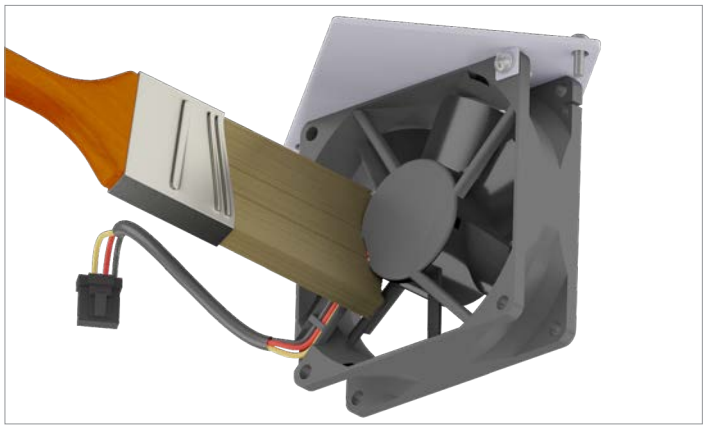

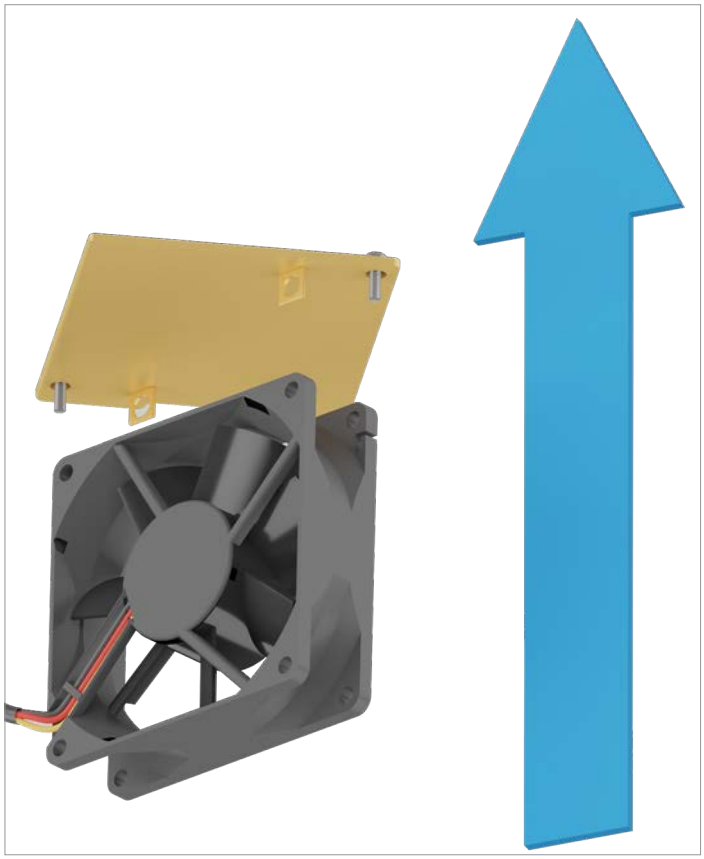

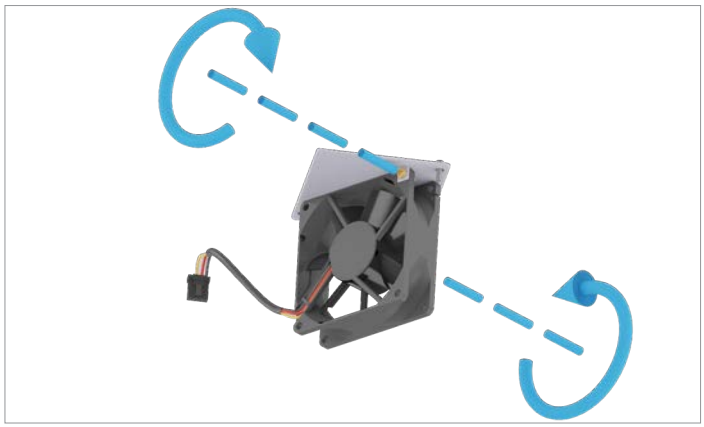

This work step must only be carried out if the fan is to be replaced. The work step is not necessary for cleaning the fan.

6. Insert and screw the fan into the cover.

7. Insert the cover with the fan attached and screw the cover in place.

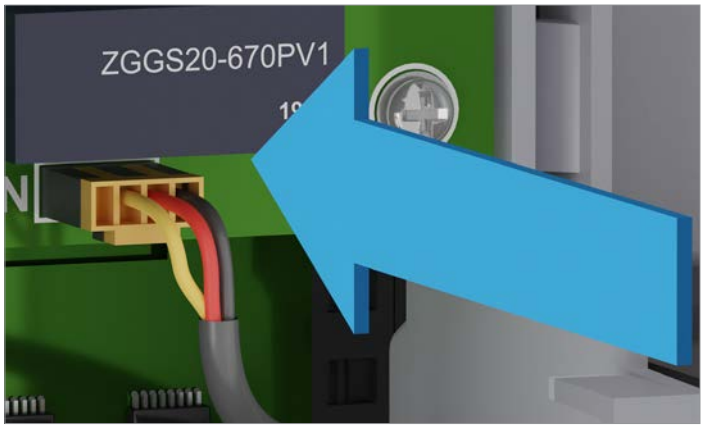

8. Plug in the power supply cable plug.

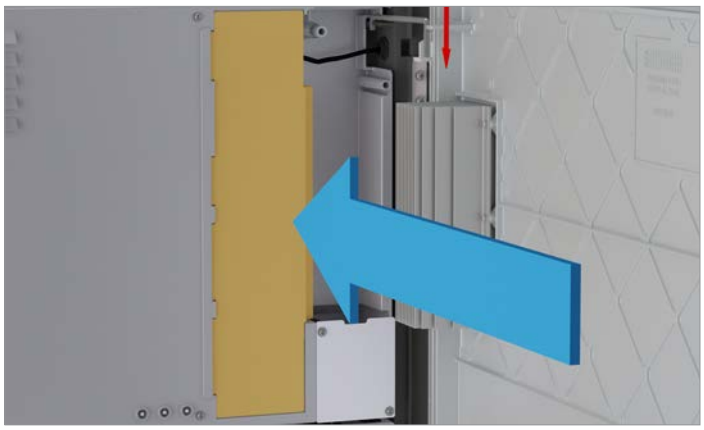

9. Insert the cover for the DC surge protection devices.

10. To complete the work, follow the instructions in the chapter “12. Recommissioning the inverter after work”, page 142.

11.5 Cleaning/replacing the fan module

DANGER

Electric shock
Potentially fatal voltages are present in the inverter during operation. When the inverter is disconnected from all power sources, this voltage remains in the inverter for up to 60 seconds.

► Perform the instructions listed in chapter "10. Disconnecting the inverter from the power supply before working on it", page 90 **before** you start work on the inverter!

Do not use any sharp, pointed or hard objects for cleaning.

Do not use liquids for cleaning.

The screws are very small and can easily fall down. You should therefore use a magnetic screwdriver.

1. Unscrew and remove the fan module.

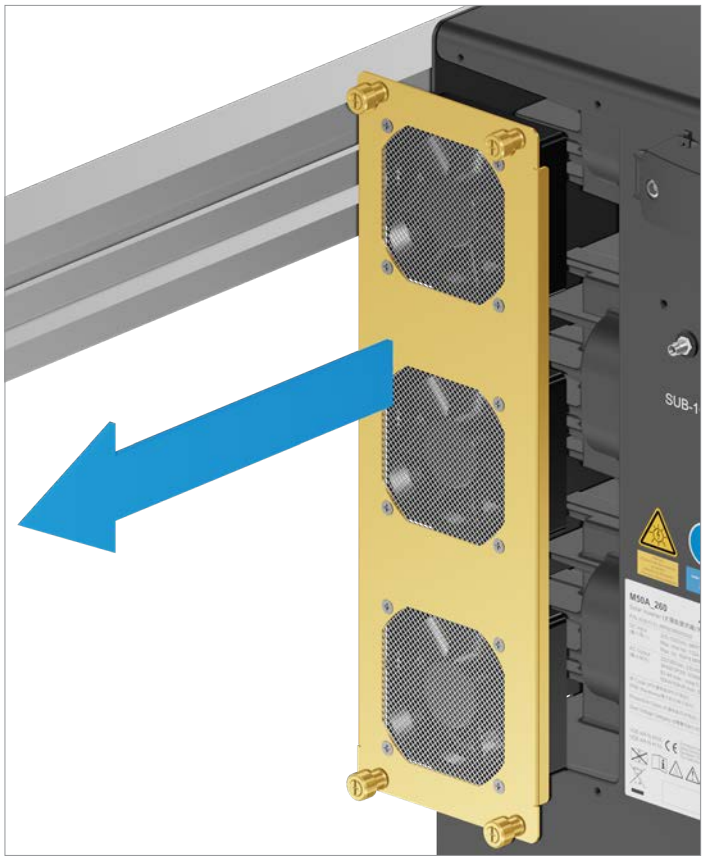

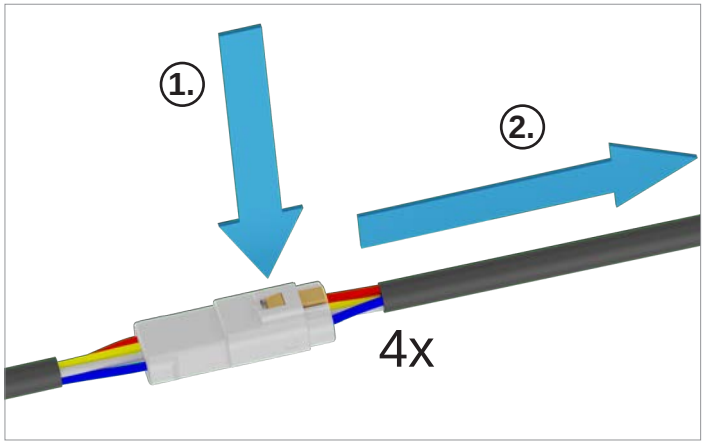

2. Pull out the power supply cable plugs.

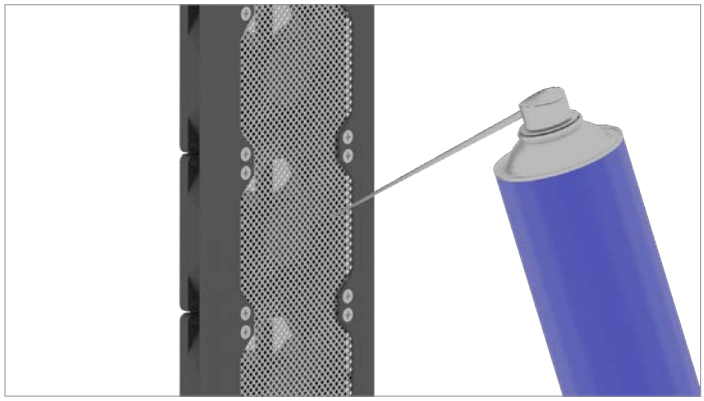

3. Clean the fan module with a compressed air cleaner or a firm brush.

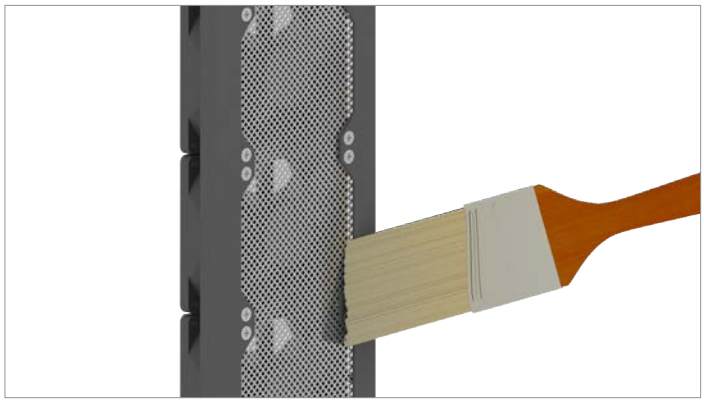

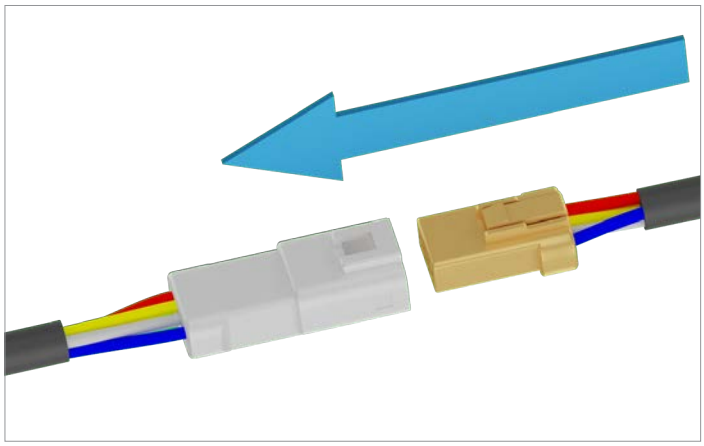

4. Insert the plugs of the power supply cables until they snap into place. It does not matter which power cable you use for which fan.

5. Insert the fan module so that the power cables are on the right side of the fan module.

6. Screw on the fan module.

7. To complete the work, follow the instructions in the chapter “12. Recommissioning the inverter after work”, page 142.

11.6 Cleaning the air outlets

The air outlets can be removed and installed while the inverter is running.

The screws are very small and can easily fall down. You should therefore use a magnetic screwdriver.

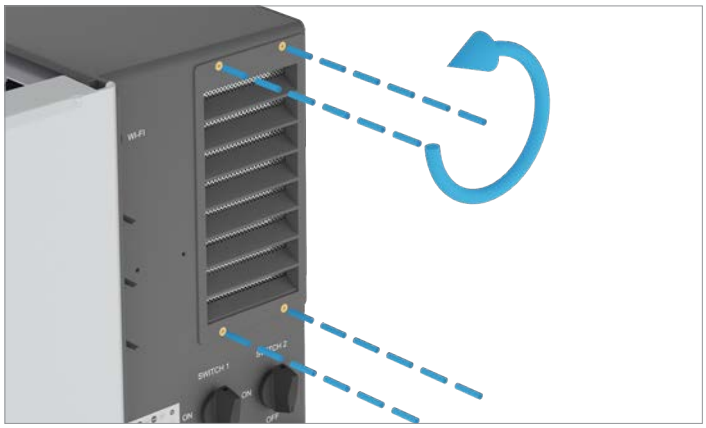

1. Unscrew and remove the air filter.

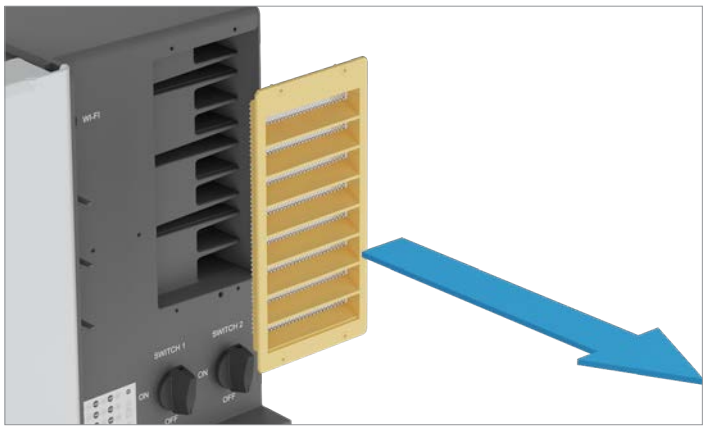

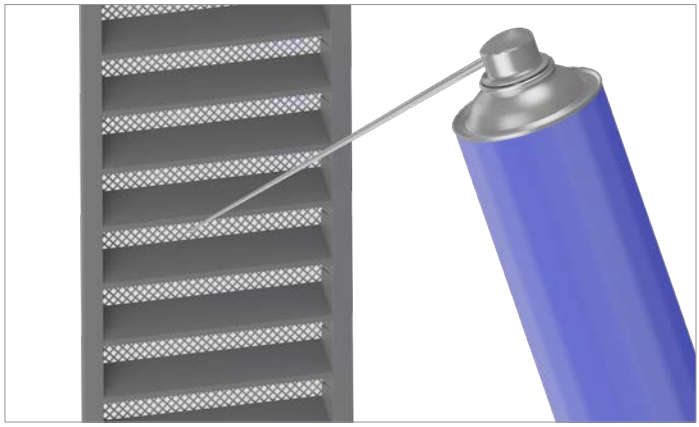

2. Clean the air filter with a compressed air cleaner or a firm brush.

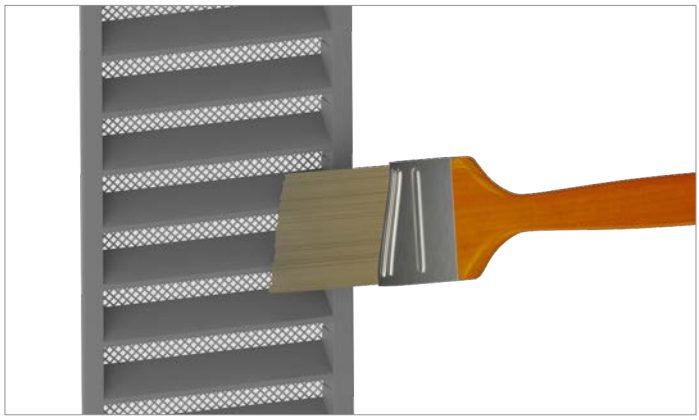

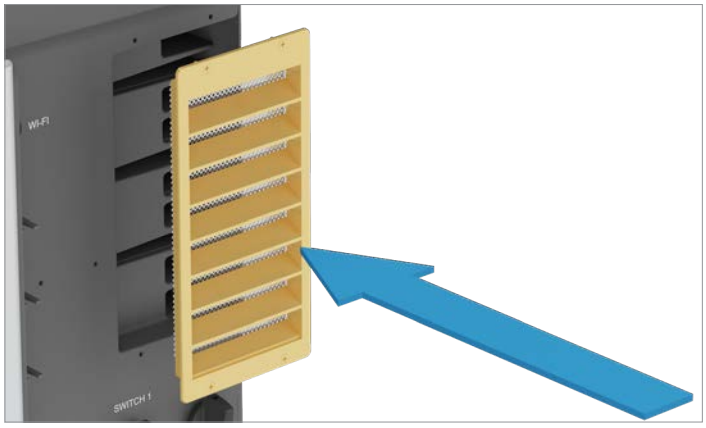

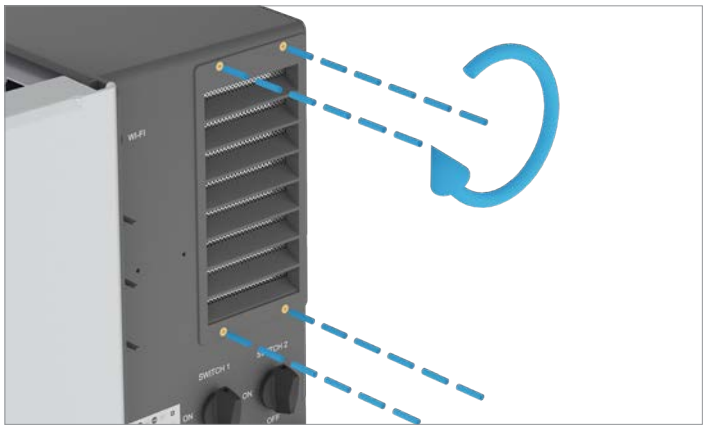

3. Insert and screw on the air filter. The fins must be facing downward.

4. To complete the work, follow the instructions in the chapter “12. Recommissioning the inverter after work”, page 142.

11.7 Installing/replacing DC surge protection devices

DANGER

Electric shock
Potentially fatal voltages are present in the inverter during operation. When the inverter is disconnected from all power sources, this voltage remains in the inverter for up to 60 seconds.

► Perform the instructions listed in chapter "10. Disconnecting the inverter from the power supply before working on it", page 90 **before** you start work on the inverter!

11.7.1 Remove the DC surge protection device

Type 2 DC surge protection devices are installed as standard. Type 1+2 combined DC surge protection devices can be ordered as accessories.

The procedure is the same for type 2 and type 1+2 DC surge protection devices.

DC surge protection devices are supplied without screws.

All screws including spring washers and washers of the old DC surge protection devices must be reused for the new DC surge protection devices.

Use an insulated, strongly magnetic screwdriver.

The mounting screws must be pulled out and inserted against a certain resistance. Make sure that no screws fall down in the process.

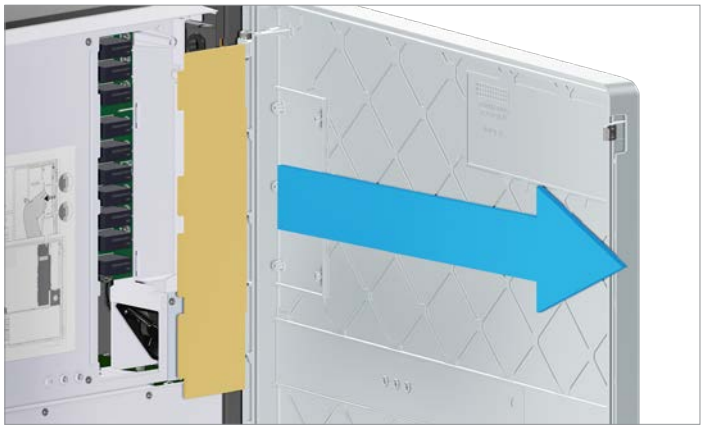

1. Remove the cover from the DC surge protection devices.

2. Pull out the power supply cable of internal fan 2.

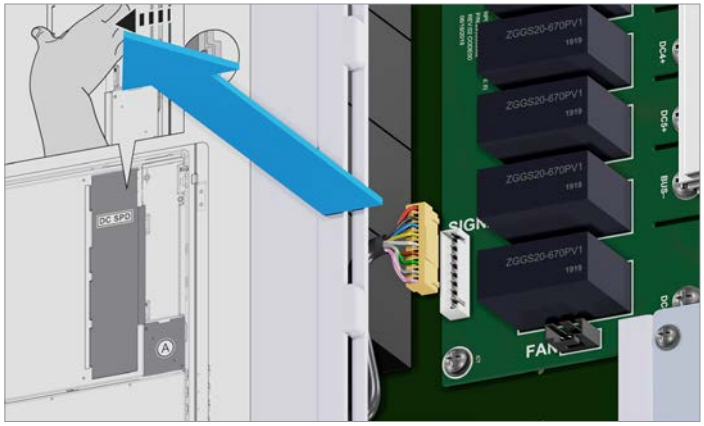

3. Pull out the signal cable.

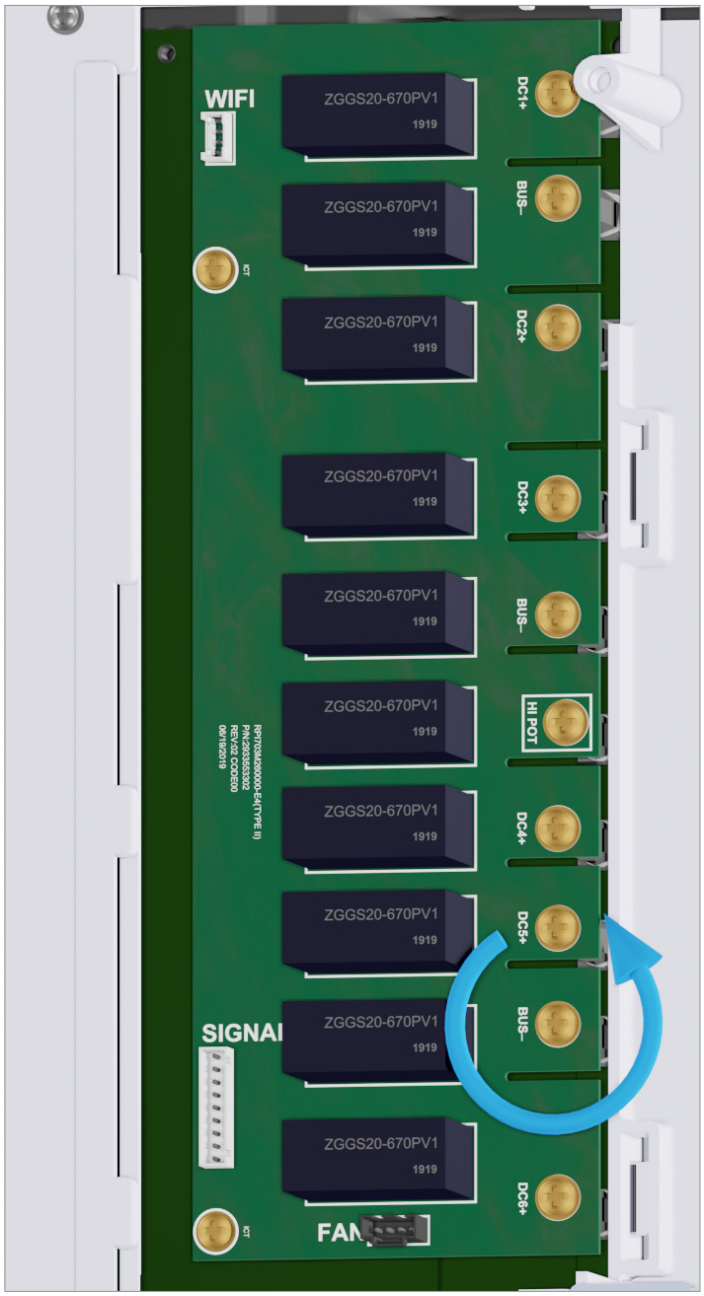

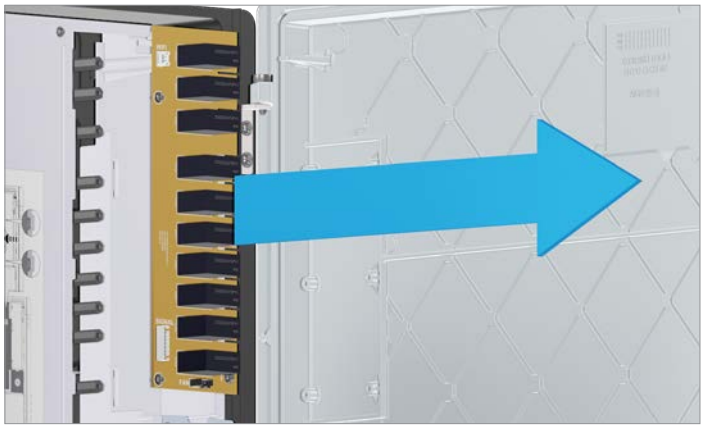

The two mounting screws on the left are only pushed through and can easily fall down!

The screws on the DC bus cannot fall out.

4. Loosen all screws and remove the card.

11.7.2 Transfer the screws for the new DC surge protection devices

1. Unscrew the 10 screws on the right (for the DC bus) on the old DC surge protection devices.

Do not insert the two mounting screws on the left until the card is already screwed on!

2. Screw the 10 screws on the right (for the DC bus) including spring washers and washers into the new DC surge protection devices.

11.7.3 Install DC surge protection devices

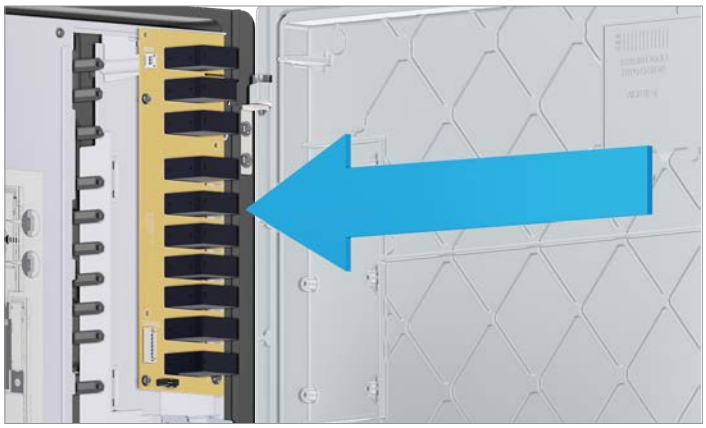

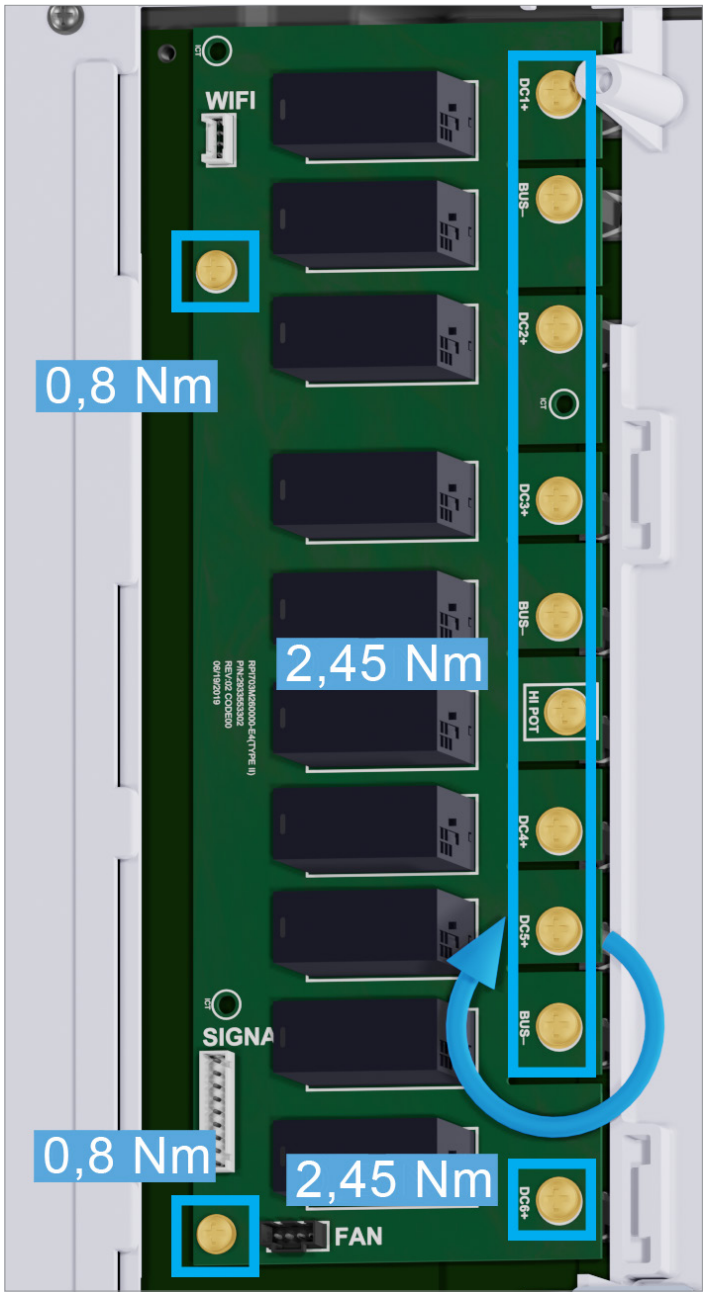

It is best to first screw the card to the DC bus with the screws on the right.

Then tighten the two mounting screws on the left.

1. Insert the new DC surge protection devices and tighten all screws to the specified torque.

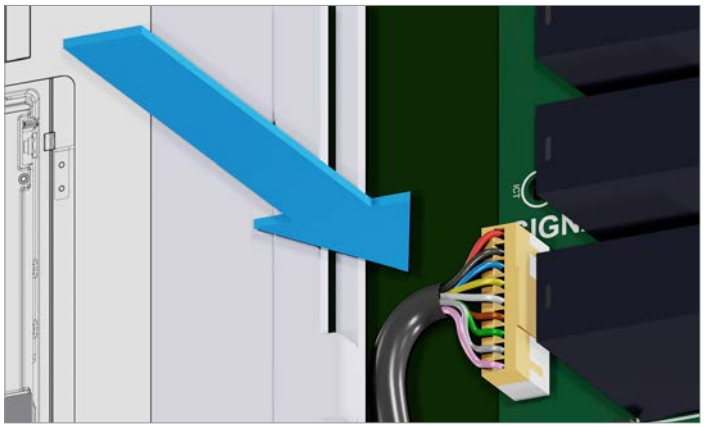

2. Plug in the signal cable.

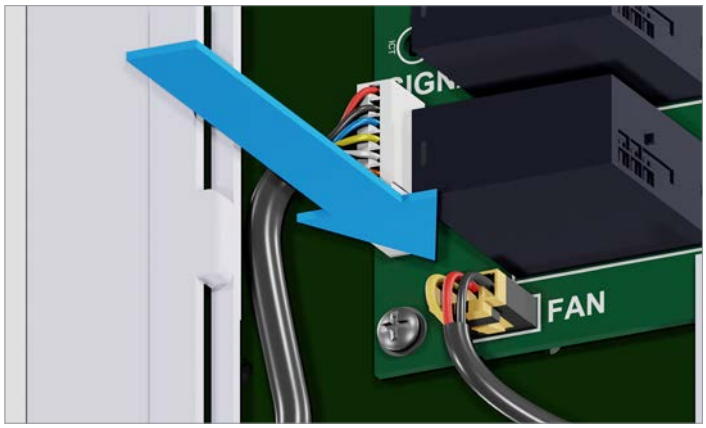

3. Plug in the power supply cable of internal fan 2.

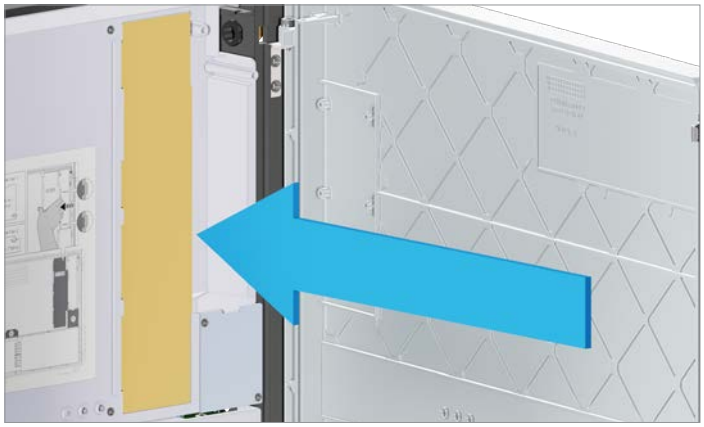

4. Insert the cover for the DC surge protection devices.

5. To complete the work, follow the instructions in the chapter “12. Recommissioning the inverter after work”, page 142.

11.8 Installing/replacing type 1+2 combined AC surge protection devices

Related topics

"11.9.2 Removing type 2 AC surge protection devices", page 128

11.8.1 Notes

DANGER

Electric shock
Potentially fatal voltages are present in the inverter during operation. When the inverter is disconnected from all power sources, this voltage remains in the inverter for up to 60 seconds.

► Perform the instructions listed in chapter "10. Disconnecting the inverter from the power supply before working on it", page 90**before** you start work on the inverter!

AC surge protection devices are supplied without screws.

All screws including spring washers and washers of the old AC surge protection devices must be reused for the new AC surge protection devices.

Use an insulated, strongly magnetic screwdriver.

The mounting screws must be pulled out and inserted against a certain resistance. Make sure that no screws fall down in the process.

11.8.2 Remove the type 1+2 combined AC surge protection device

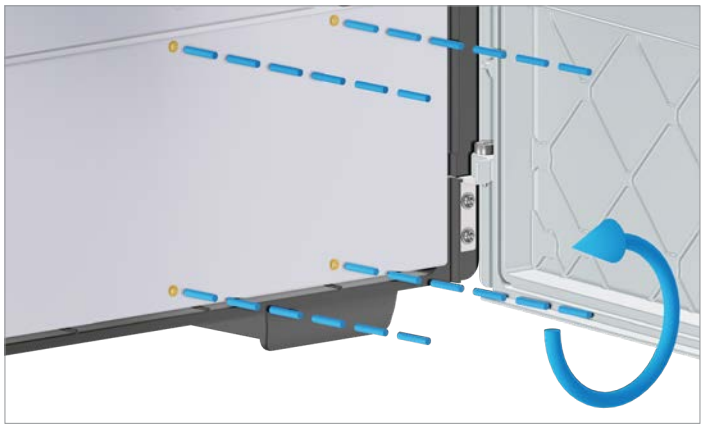

1. Unscrew and remove the cover.

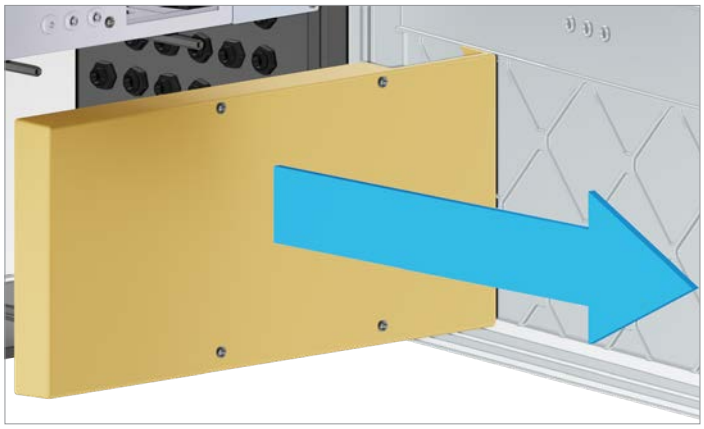

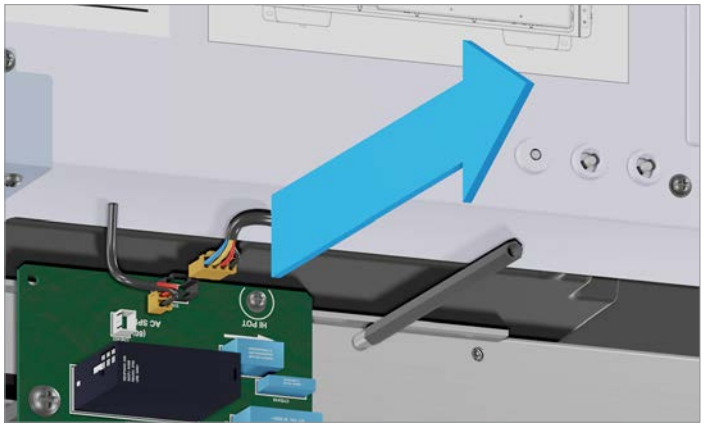

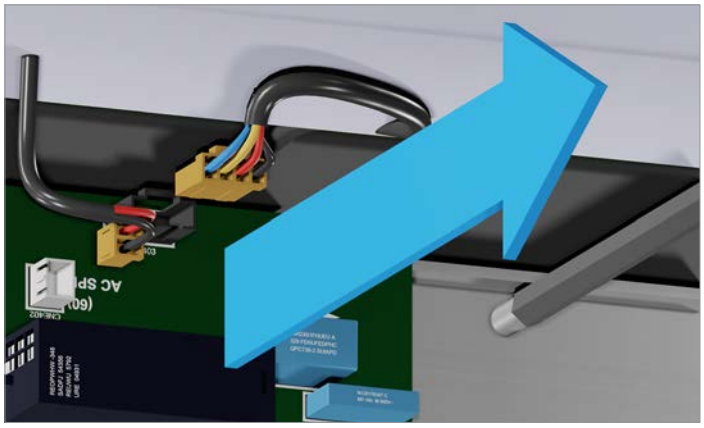

2. Pull out both cables from the top of the card.

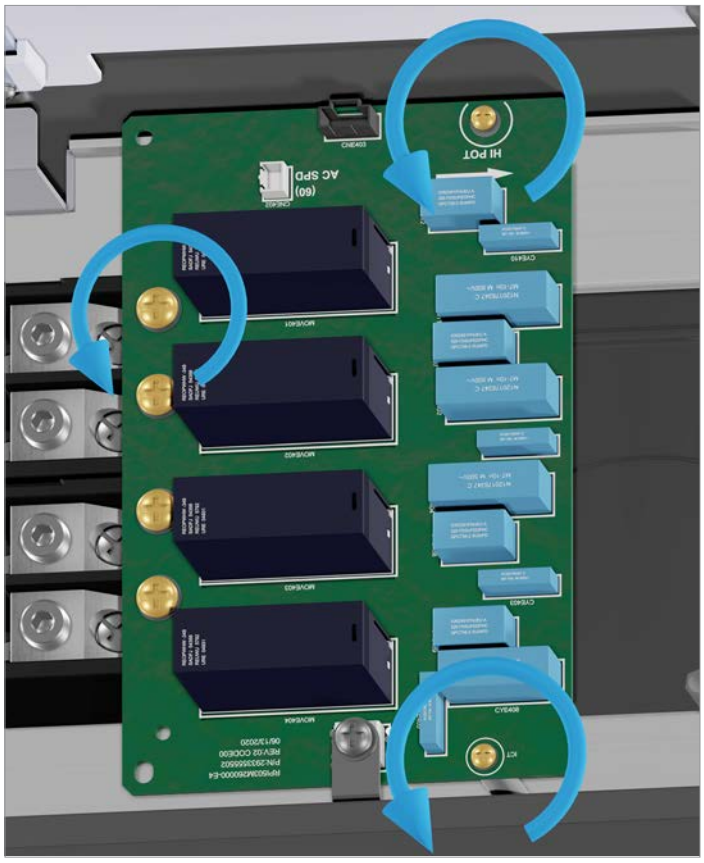

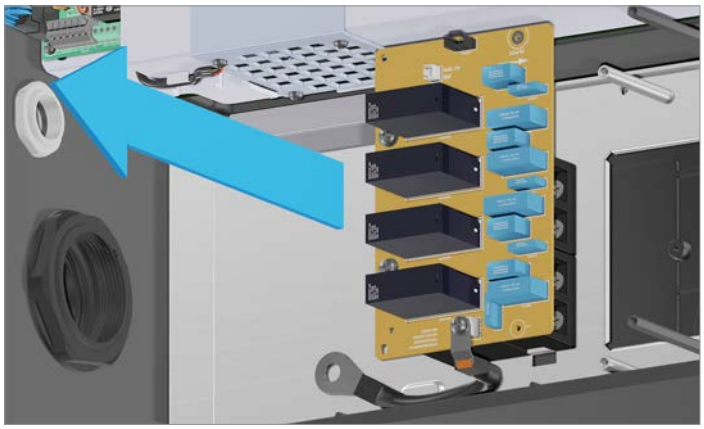

The two mounting screws on the right are only pushed through and can easily fall down!

The screws on the AC bus cannot fall out.

3. Loosen all screws and remove the card.

11.8.3 Transfer screws for the new type 1+2 combined AC surge protection devices

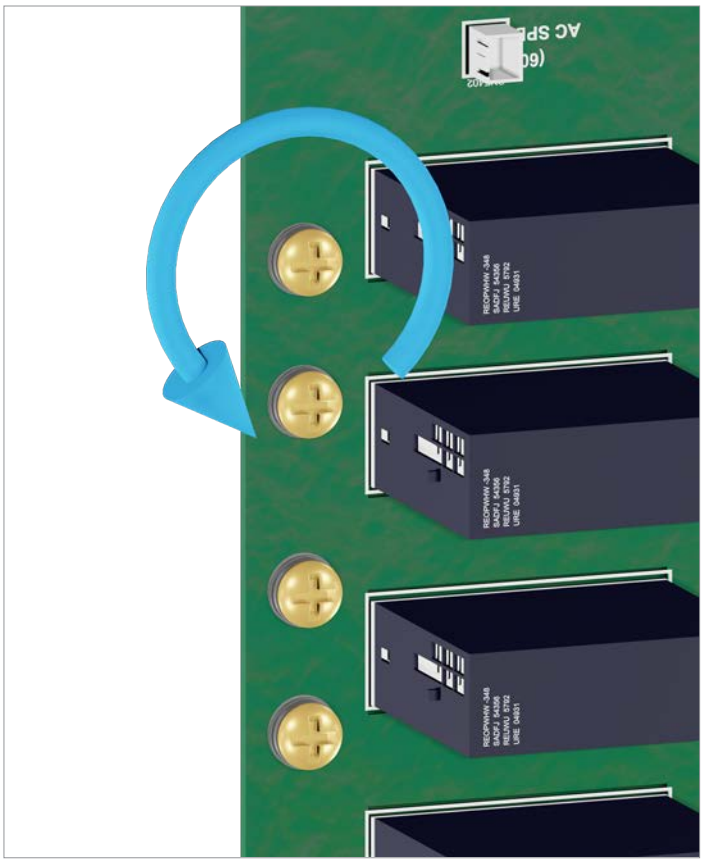

1. Unscrew the four screws on the left (for the AC bus) on the old AC surge protection devices.

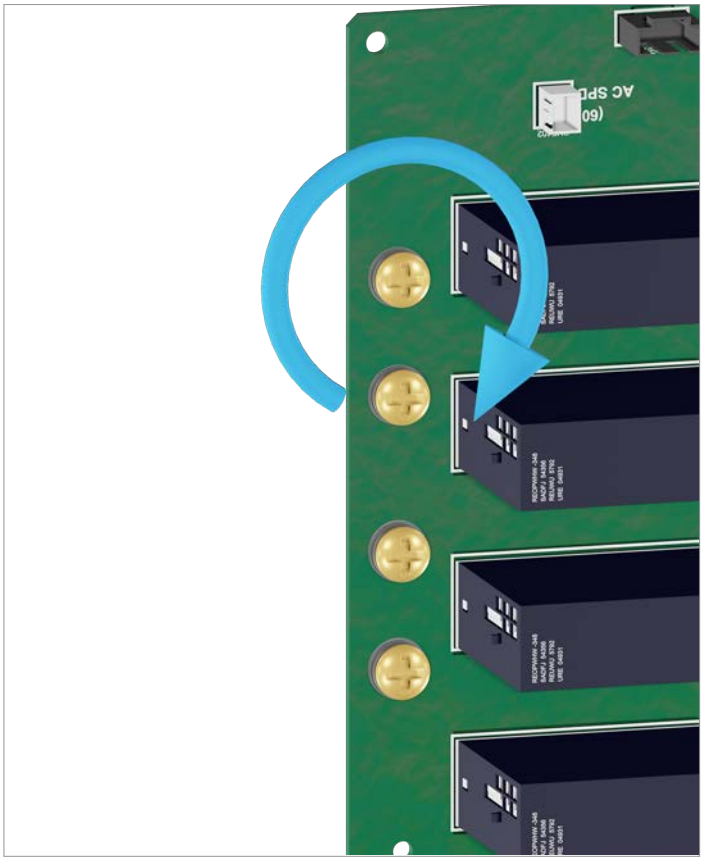

Do not insert the two mounting screws on the right until the card has already been screwed on!

2. Screw the four screws on the left (for the AC bus) including spring washers and washers into the new AC surge protection devices.

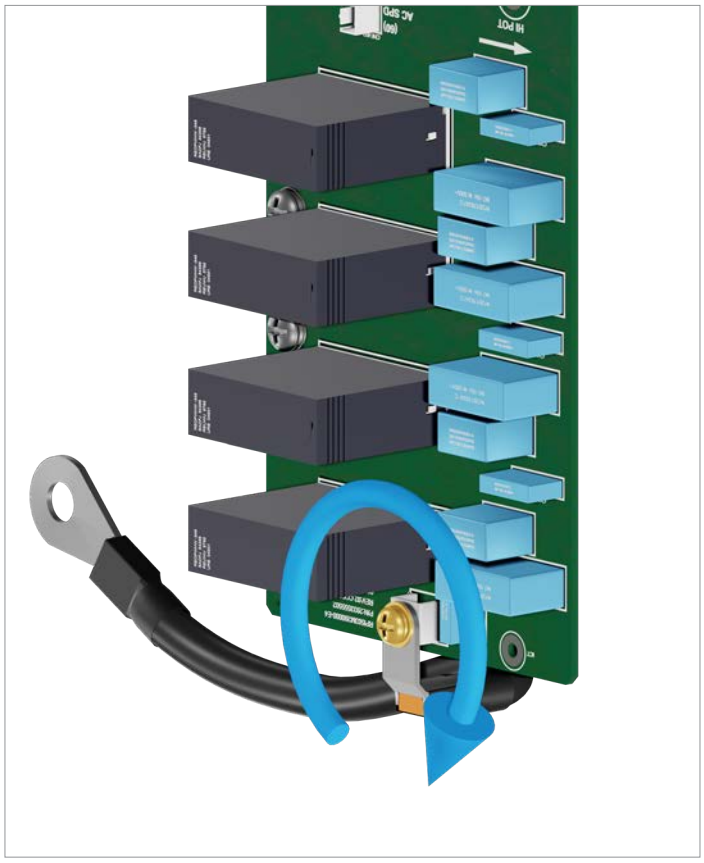

3. Screw on the grounding cable with screw, spring washer and washer (included with the card) and pull it along behind the card.

11.8.4 Install the type 1+2 combined AC Surge protection device

Related topics

“11.9.2 Removing type 2 AC surge protection devices”, page 128

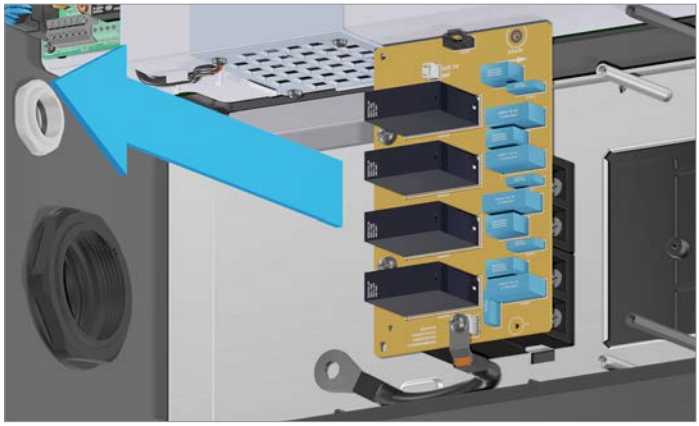

1. Install the new card and tighten all screws on the printed circuit board.

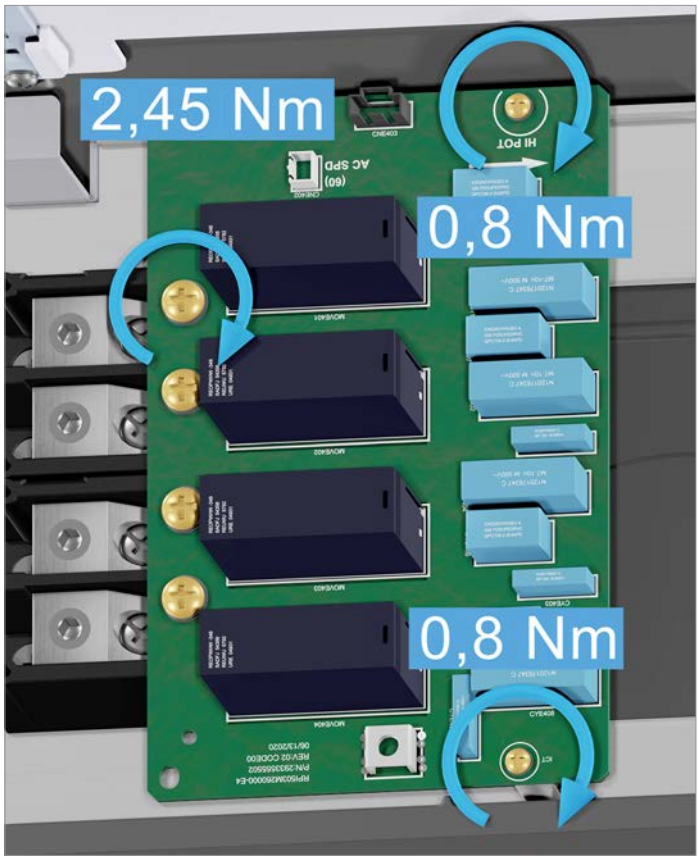

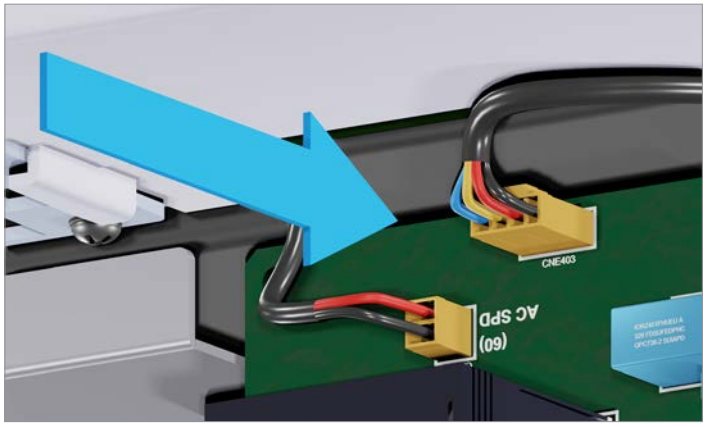

2. Plug the two cables into the top of the printed circuit board.

3. Screw the grounding cable to the PE screw.

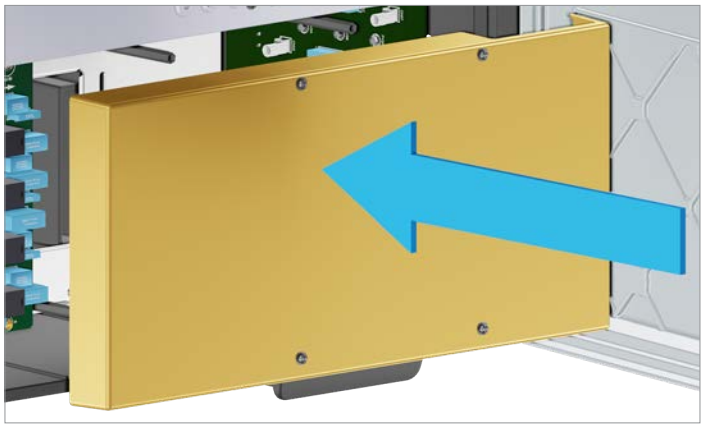

4. Mount and screw on the cover of the AC surge protection devices.

☑ Installation of the type 1+2 combined AC surge protection devices is complete.

5. To complete the work, follow the instructions in the chapter “12. Recommissioning the inverter after work”, page 142.

11.9 Installing/replacing type 2 combined AC surge protection devices

11.9.1 Notes

DANGER

Electric shock
Potentially fatal voltages are present in the inverter during operation. When the inverter is disconnected from all power sources, this voltage remains in the inverter for up to 60 seconds.

► Perform the instructions listed in chapter "10. Disconnecting the inverter from the power supply before working on it", page 90**before** you start work on the inverter!

Type 2 AC surge protection devices are installed as standard. Type 1+2 combined AC surge protection devices can be ordered as accessories.

AC surge protection devices are supplied without screws.

All screws including spring washers and washers of the old AC surge protection devices must be reused for the new AC surge protection devices.

Use an insulated, strongly magnetic screwdriver.

The mounting screws must be pulled out and inserted against a certain resistance. Make sure that no screws fall down in the process.

11.9.2 Removing type 2 AC surge protection devices

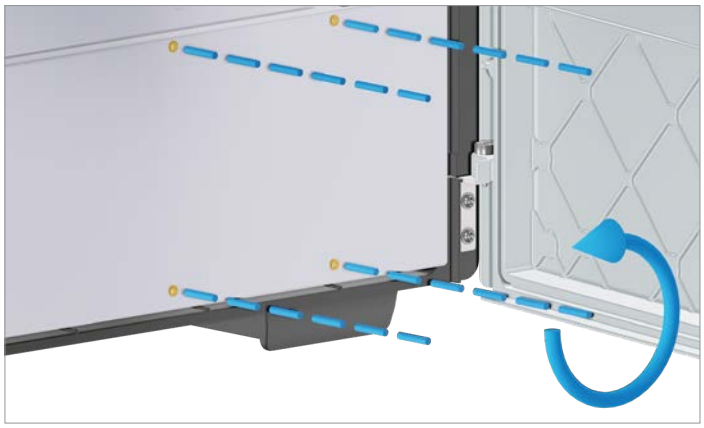

1. Unscrew and remove the cover.

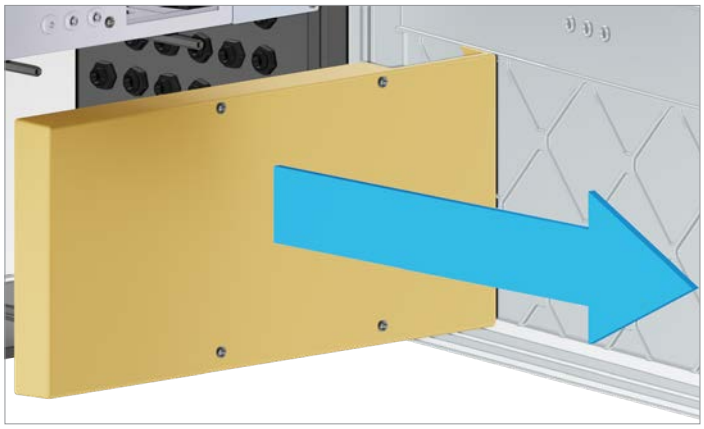

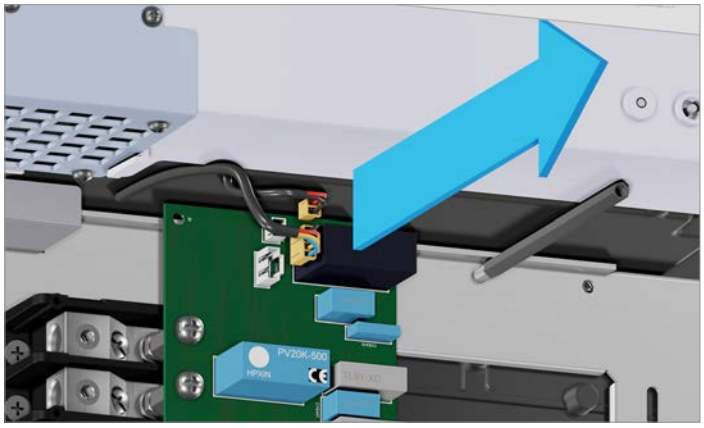

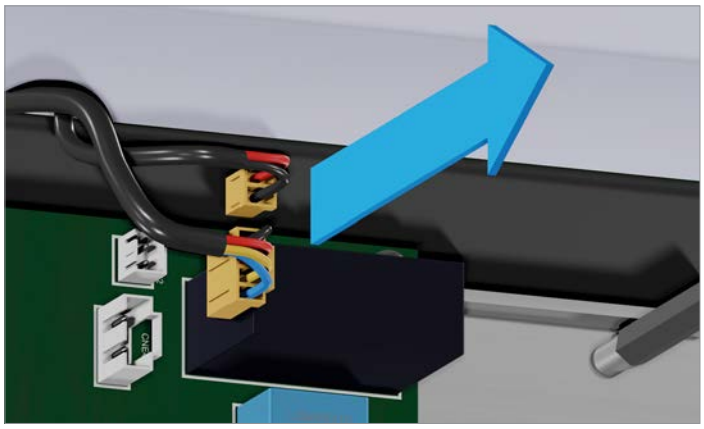

2. Pull out both cables from the top of the card.

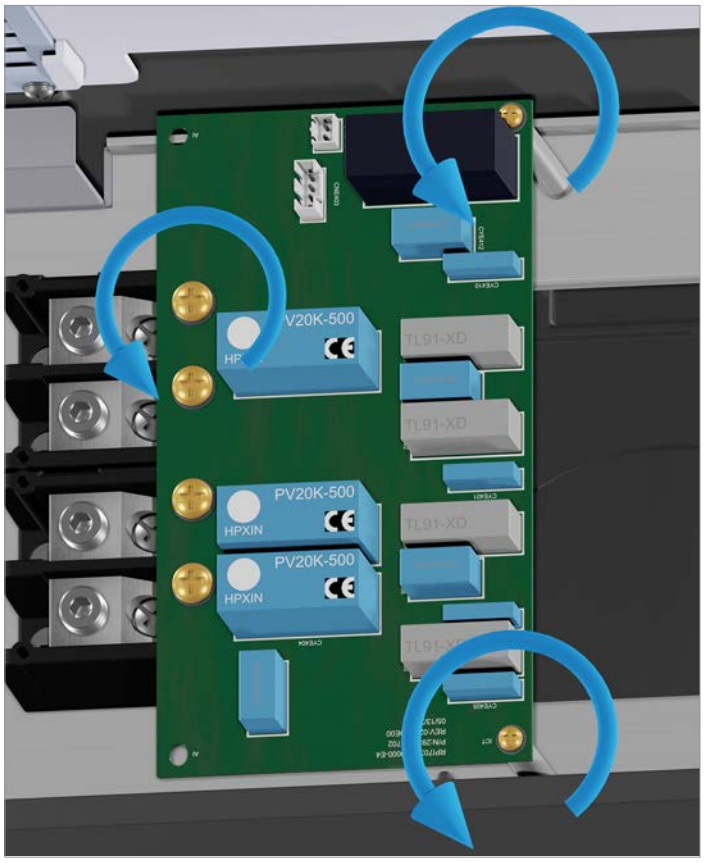

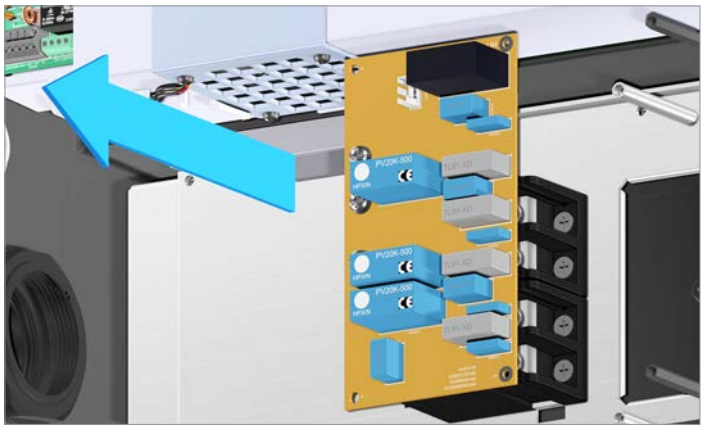

The two mounting screws on the right are only pushed through and can easily fall down!

The screws on the AC bus cannot fall out.

3. Loosen all screws and remove the card.

11.9.3 Transfer screws for the new type 2 AC surge protection devices

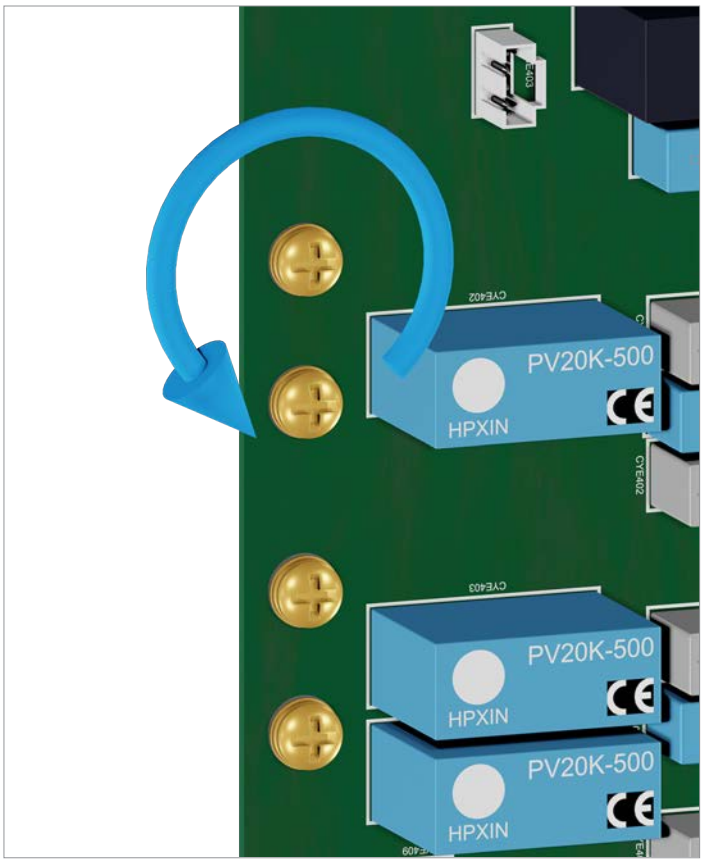

1. Unscrew the four screws on the left (for the AC bus) on the old AC surge protection devices.

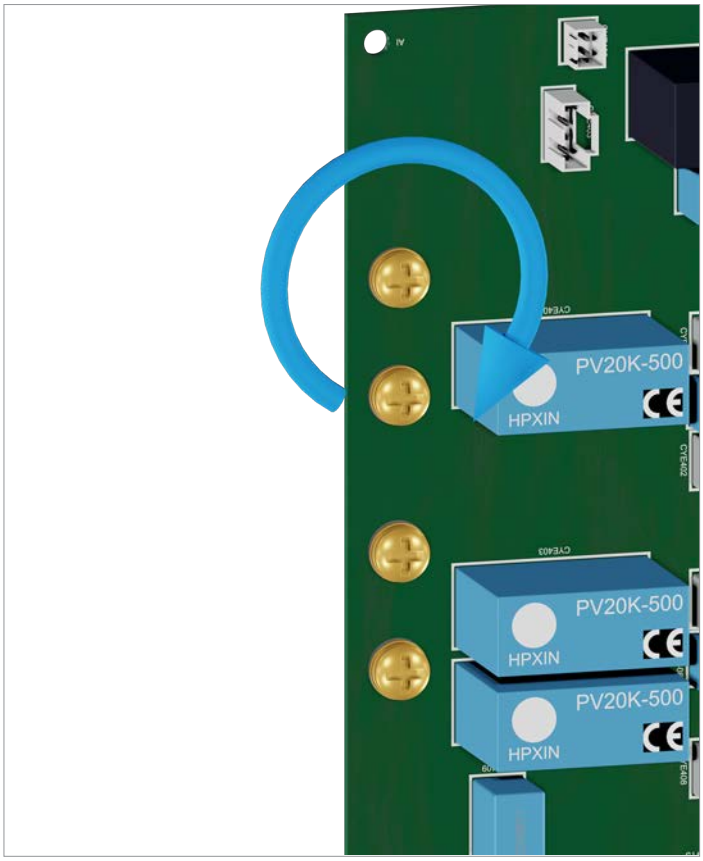

Do not insert the two mounting screws on the right until the card has already been screwed on!

2. Screw the four screws on the left (for the AC bus) including spring washers and washers into the new AC surge protection devices.

11.9.4 Installing type 2 AC surge protection devices

Related topics

"11.8.4 Install the type 1+2 combined AC Surge protection device", page 125

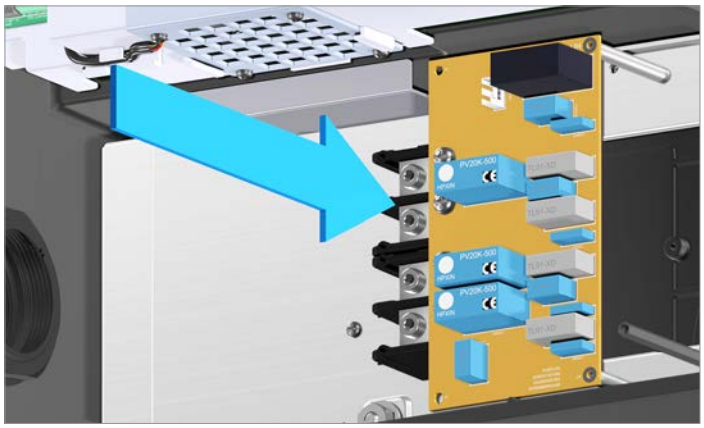

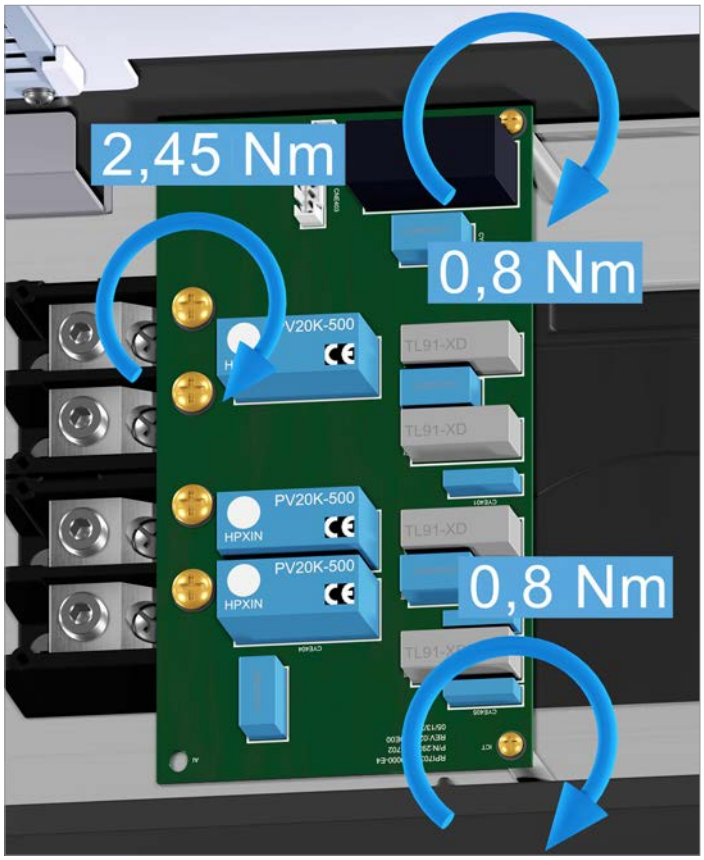

1. Install the new card and tighten all screws.

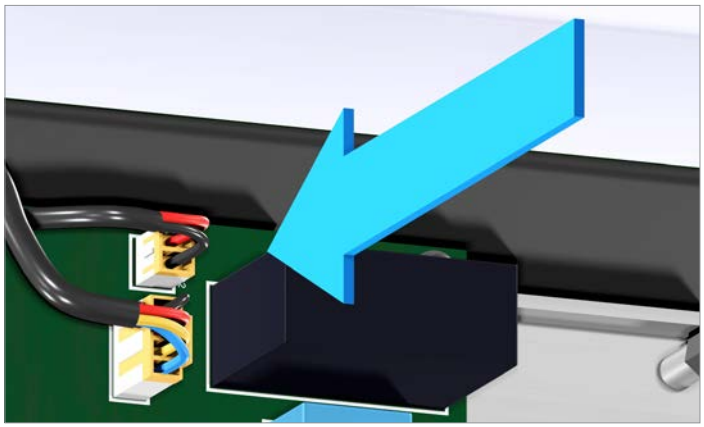

2. Plug the two cables into the top of the printed circuit board.

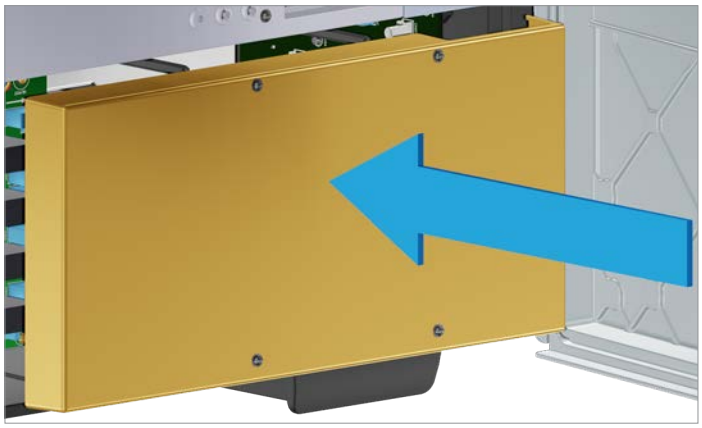

3. Mount and screw on the cover of the AC surge protection devices.

☑ Installation of the type 2 combined AC surge protection devices is complete.

4. To complete the work, follow the instructions in the chapter “12. Recommissioning the inverter after work”, page 142.

11.10 Installing/replacing the Sub-1G antenna

11.10.1 Notes

The Sub-1G antenna can be installed or replaced during operation.

11.10.2 Removing the Sub-1G antenna

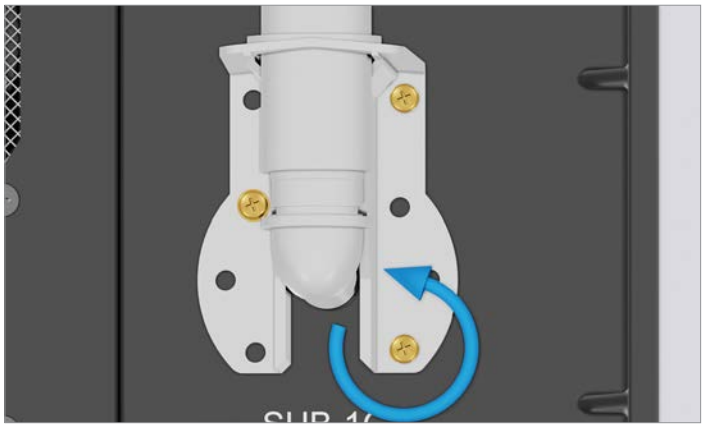

1. Unscrew the mounting frame.

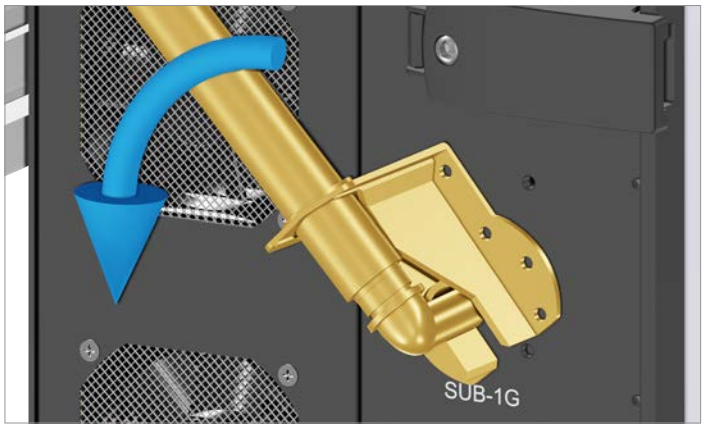

2. Rotate the mounting frame with the Sub-1G antenna downward.

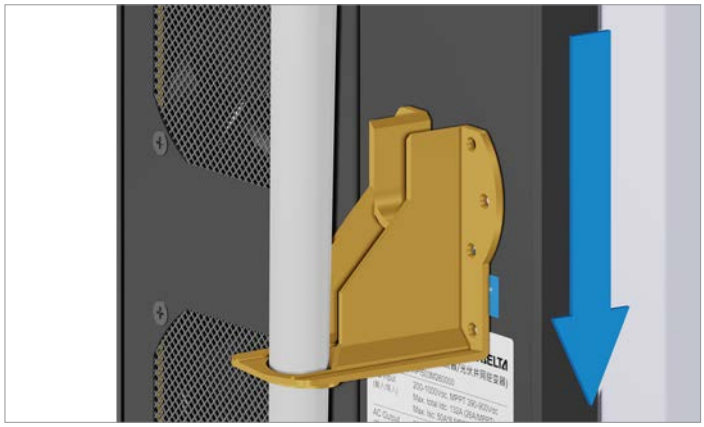

3. Pull the mounting frame downward.

4. Unscrew the Sub-1G antenna.

5. If no new Sub-1G antenna is to be fitted, screw on the cover cap of the Sub-1G connection.

11.10.3 Installing the Sub-1G antenna

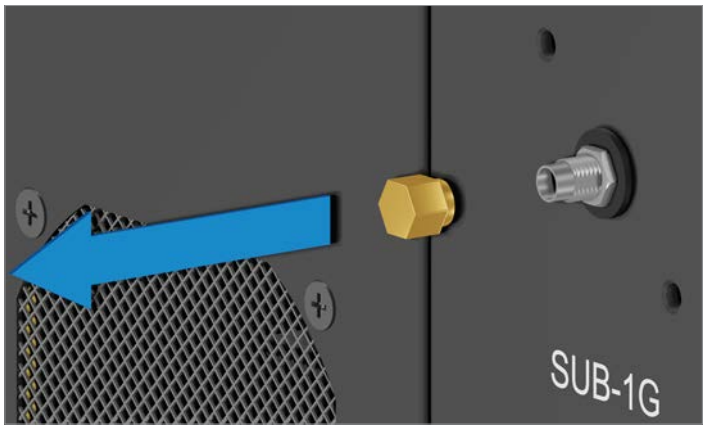

Keep the cover cap of the Sub-1G connection.

1. Unscrew and remove the cover cap of the Sub-1G connector.

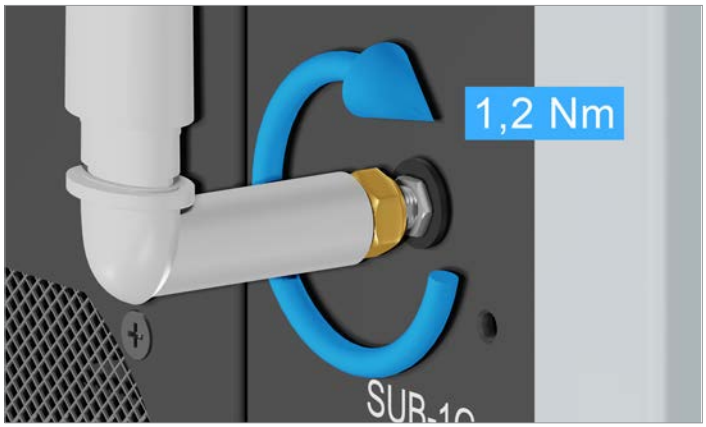

2. Mount the Sub-1G antenna and screw it on so that it can still be rotated.

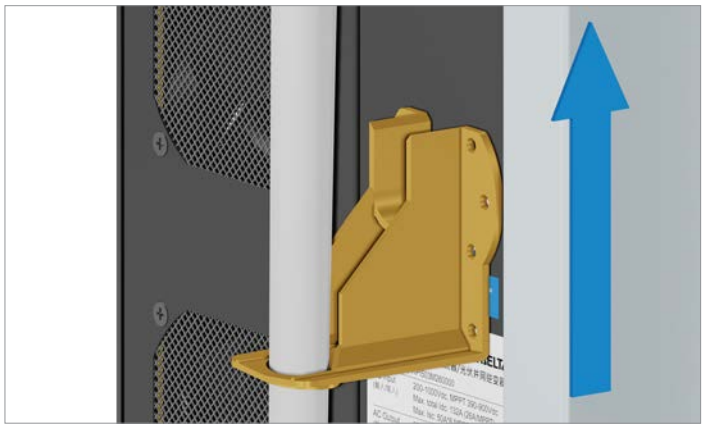

3. Slide the mounting frame over the Sub-1G antenna upside down from below.

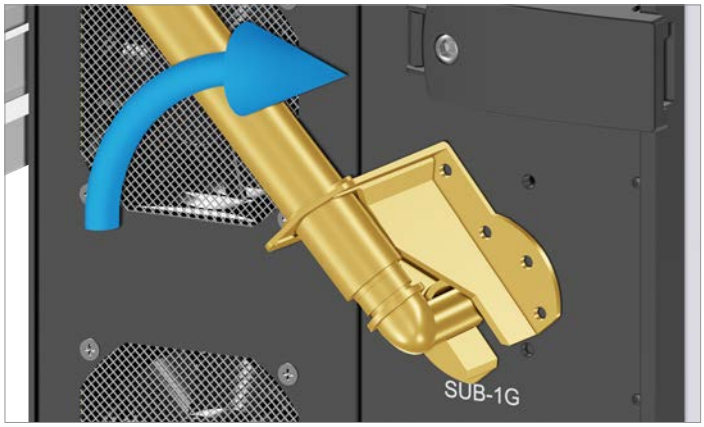

4. Rotate the mounting frame with the Sub-1G antenna upward.

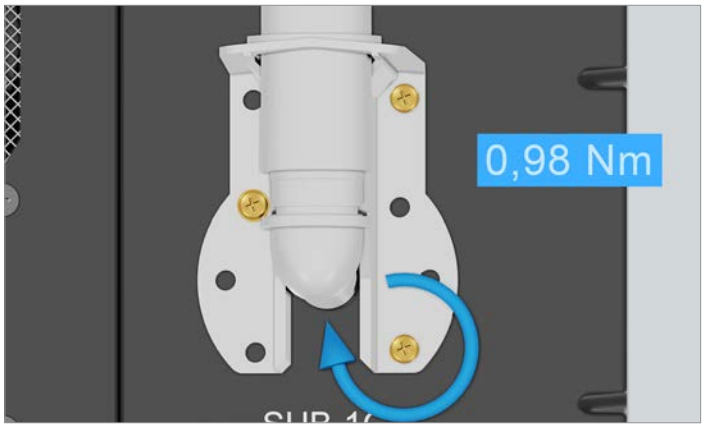

5. Screw on the mounting frame.

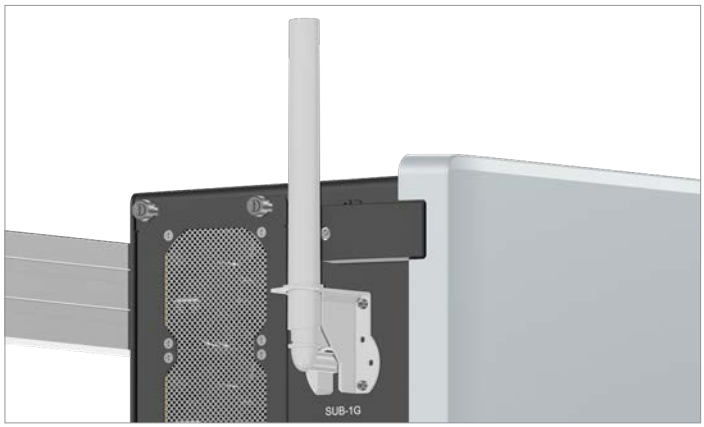

☑ Installation of the Sub-1G antenna is complete.

11.11 Installing/replacing the Wi-Fi module

11.11.1 Notes

DANGER

Electric shock
Potentially fatal voltages are present in the inverter during operation. When the inverter is disconnected from all power sources, this voltage remains in the inverter for up to 60 seconds.

► Perform the instructions listed in chapter “10. Disconnecting the inverter from the power supply before working on it”, page 90 **before** you start work on the inverter!

11.11.2 Removing the Wi-Fi module

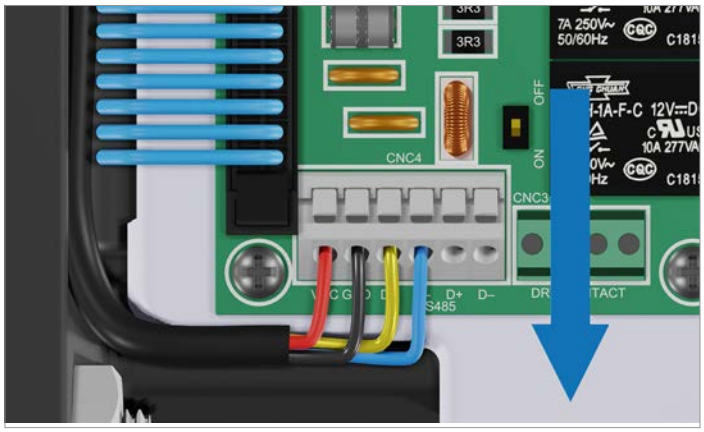

1. Pull the cable of the Wi-Fi module out of the communication card and remove it from the inverter.

2. Unscrew the cable gland of the Wi-Fi connection and remove the cable, cable gland and seal.

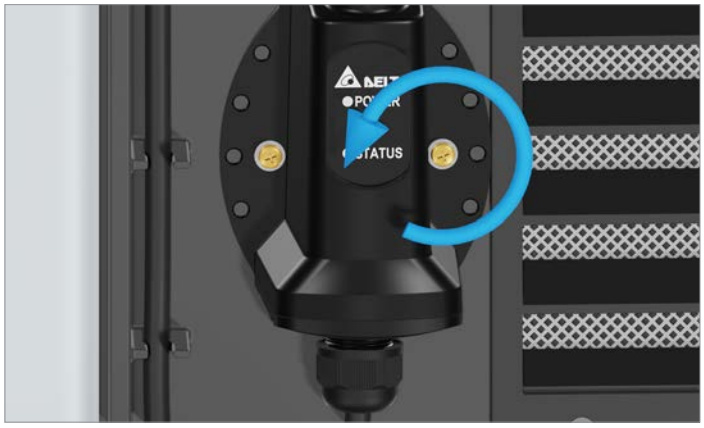

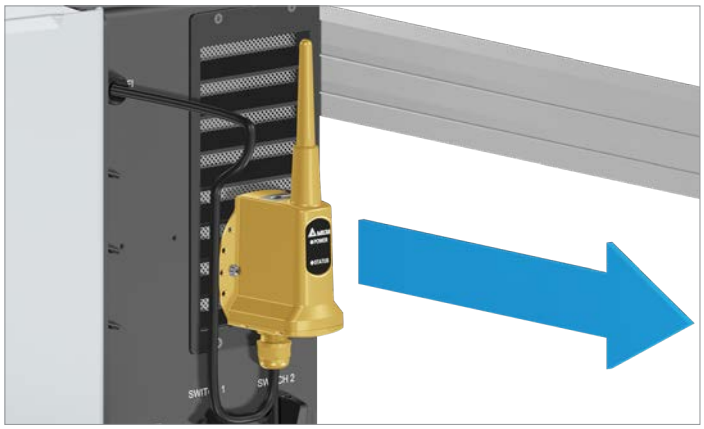

3. Unscrew and remove the Wi-Fi module.

4. If a new Wi-Fi module is not to be fitted, screw on the cable gland including the blind plug.

11.11.3 Installing the Wi-Fi module

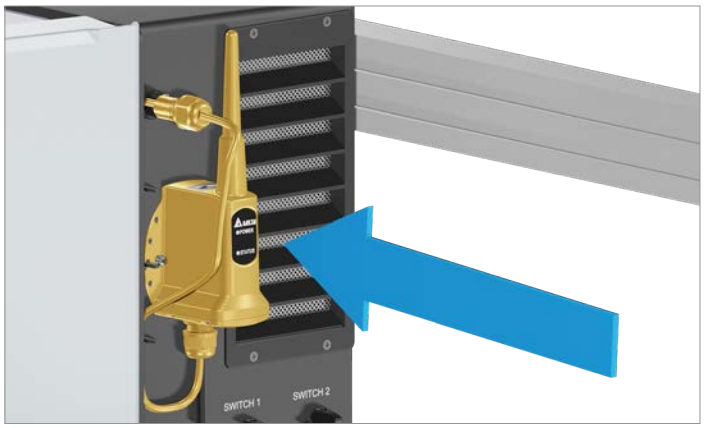

1. Mount and screw on the Wi-Fi module.

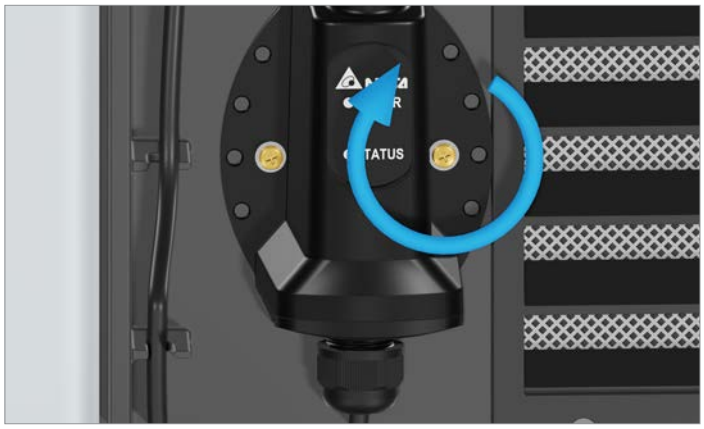

2. Pull the cable through the seal and cable gland and tighten the cable gland.

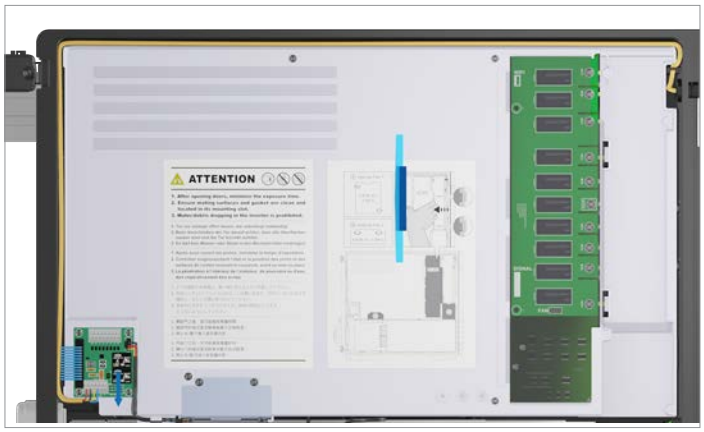

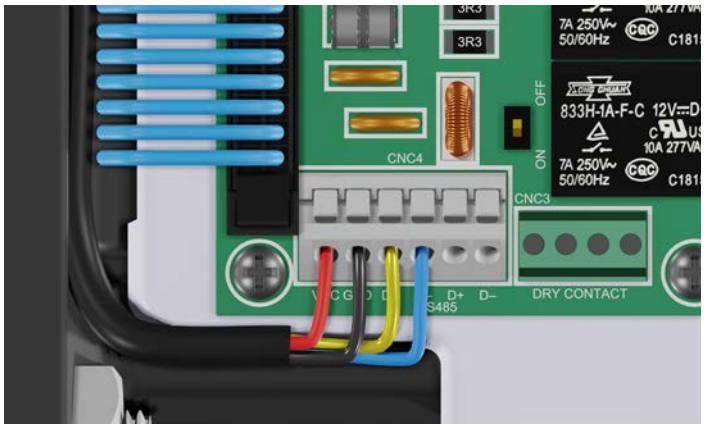

3. Route the cable through the inverter as illustrated and connect it to the RS485 terminal block of the communication card.

Red	VCC
Black	GND
Yellow	D+ (DATA+)
Blue	D– (DATA–)

☑ Installation of the Wi-Fi module is complete.

4. To complete the work, follow the instructions in the chapter “12. Recommissioning the inverter after work”, page 142.

12. Recommissioning the inverter after work

Before carrying out any work on the inverter, carry out the work steps described in the chapter "10. Disconnecting the inverter from the power supply before working on it", page 90!

To complete all work on the inverter, carry out the work steps described in this chapter!

12.1 Safety Instructions

DANGER

Electric shock
Potentially fatal voltages are present in the inverter during operation. When the inverter is disconnected from all power sources, this voltage remains in the inverter for up to 60 seconds.
You should therefore always carry out the following steps before working on the inverter:

1. Turn both DC disconnectores to the ***OFF*** position.
2. Disconnect the inverter from all AC and DC voltage sources and make sure that none of the connections can be restored accidentally.
3. Wait at least 60 seconds for the internal capacitors to discharge.

DANGER

Electric shock
Potentially fatal voltages are present at the DC connections of the inverter. When light falls on the solar modules, they immediately start to generate electricity. This also happens when light does not fall directly on the solar modules.

- ► Never disconnect the inverter from the solar modules when it is under load.
- ► Turn both DC disconnectores to the ***OFF*** position.
- ► Disconnect the connection to the grid so that the inverter cannot feed energy into the grid.
- ► Disconnect the inverter from all AC and DC voltage sources. Make sure that none of the connections can be restored accidentally.
- ► Ensure that the DC cables cannot be touched accidentally.

DANGER

Electric shock
The inverter has a high leakage current value.

- ► **Always** connect the ground cable first, then the AC and DC cables.

WARNING

Electric shock
The IP65 protection degree is no longer guaranteed when the door is open.

- ► Only open the door when absolutely necessary.
- ► Do not open the door if water or dirt might enter the inverter.
- ► After work is completed, ensure that the door is properly shut and tightened again. Check that the door is properly sealed.

WARNING

Heavy weight
The inverter is heavy.

- ► Lift and carry the inverter with at least 2 people.

WARNING

Hot surfaces
The surface of the inverter can get very hot during operation.

- Always wear safety gloves when touching the inverter.

All work described in this section must only be carried out by electrical installers who are trained and approved for work on grid-connected solar inverters.

12.2 Procedure

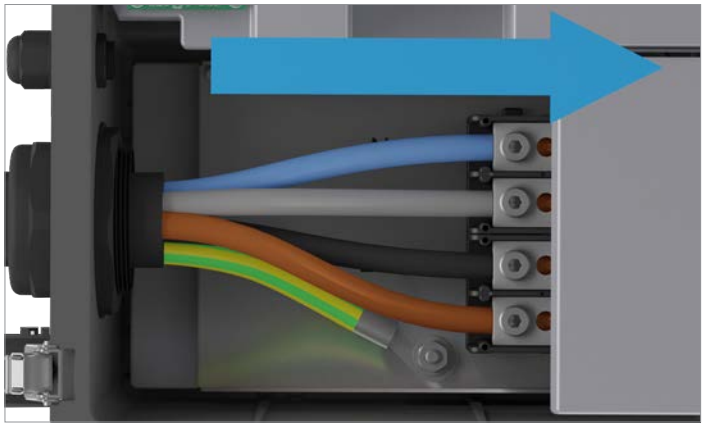

1. Plug in and tighten the conductors of the AC cable.

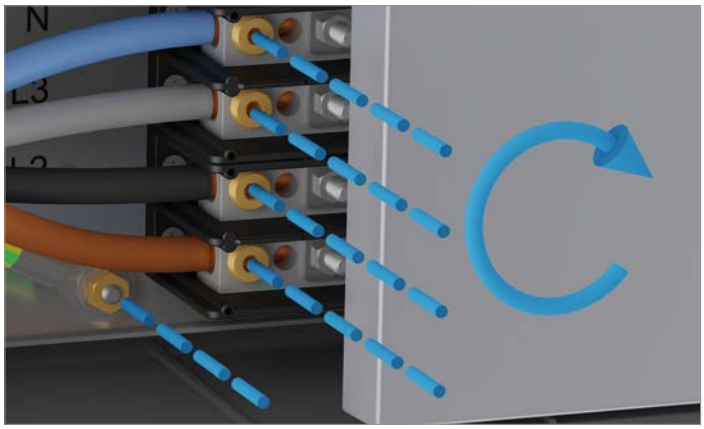

2. Tighten the AC cable gland.

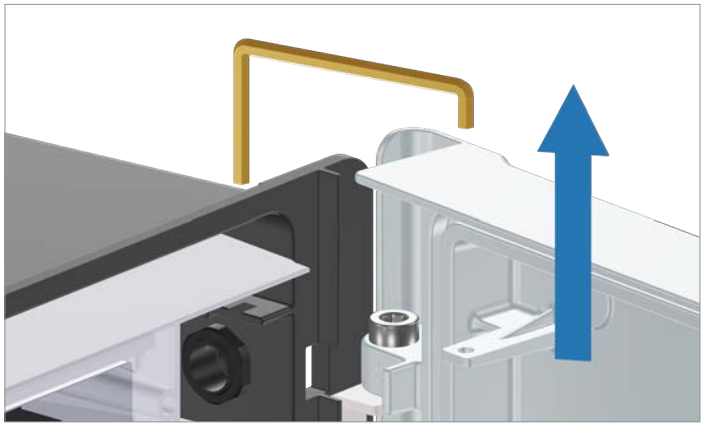

3. Remove the Allen key from the top of the door.

4. Close the door.

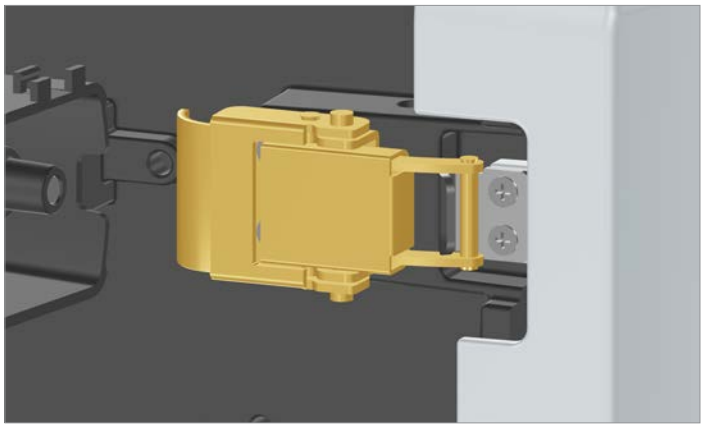

5. Close the upper door lock and screw on the cover.

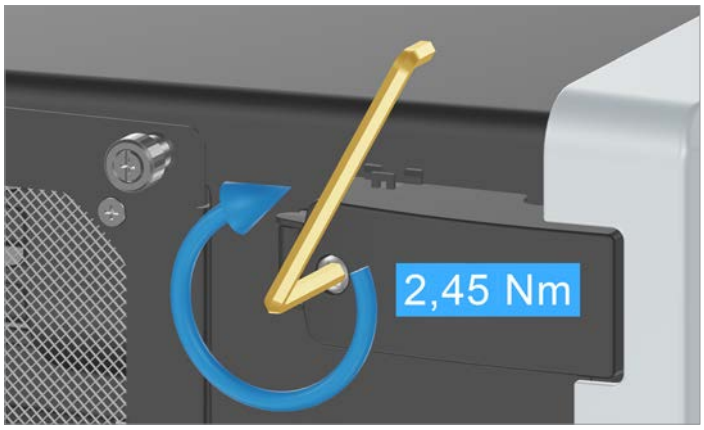

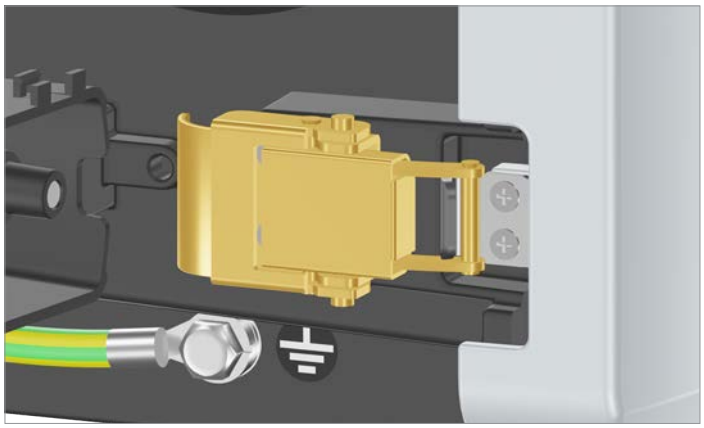

6. Close the lower door lock and screw on the cover.

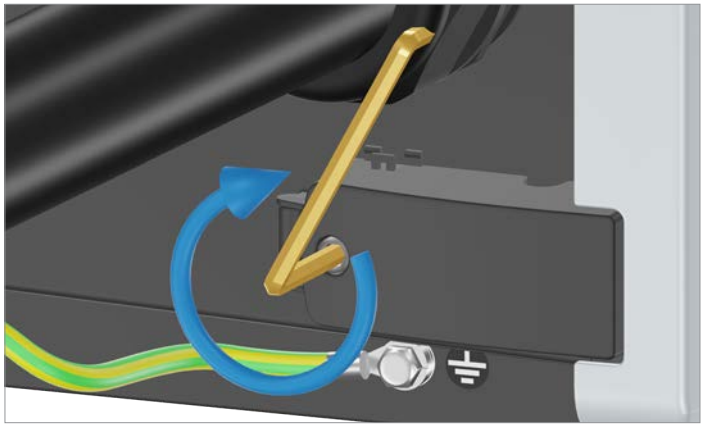

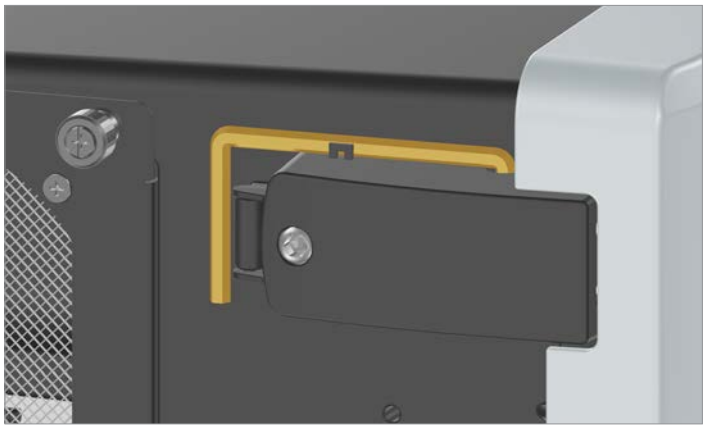

7. Insert the Allen key into the upper door lock.

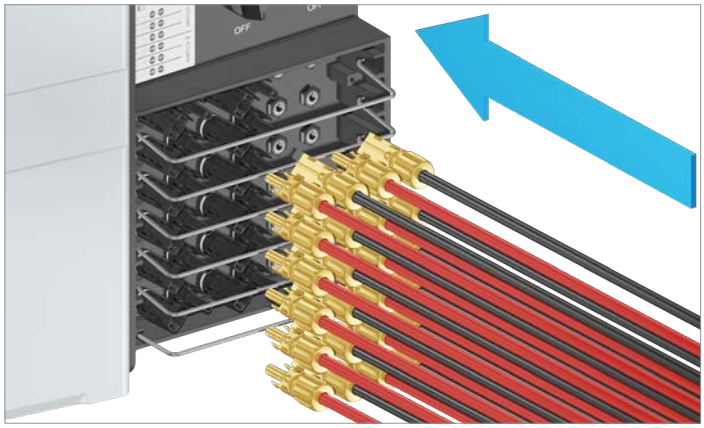

8. Plug in the DC cables.

9. Close the isolating switch between the inverter and the grid connection point or inverter and the solar modules.

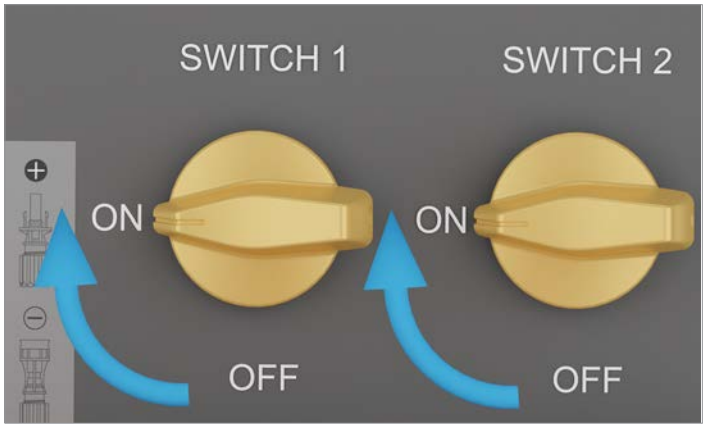

10. Turn both DC disconnectores to the ***ON*** position.

☑ Recommissioning is complete.

13. Replacing the inverter

DANGER

Electric shock
Potentially fatal voltages are present in the inverter during operation. When the inverter is disconnected from all power sources, this voltage remains in the inverter for up to 60 seconds.
You should therefore always carry out the following steps before working on the inverter:

1. Turn both DC disconnectores to the ***OFF*** position.
2. Disconnect the inverter from all AC and DC voltage sources and make sure that none of the connections can be restored accidentally.
3. Wait at least 60 seconds for the internal capacitors to discharge.

DANGER

Electric shock
Potentially fatal voltages are present at the DC connections of the inverter. When light falls on the solar modules, they immediately start to generate electricity. This also happens when light does not fall directly on the solar modules.

- ► Never disconnect the inverter from the solar modules when it is under load.
- ► Turn both DC disconnectores to the ***OFF*** position.
- ► Disconnect the connection to the grid so that the inverter cannot feed energy into the grid.
- ► Disconnect the inverter from all AC and DC voltage sources. Make sure that none of the connections can be restored accidentally.
- ► Ensure that the DC cables cannot be touched accidentally.

DANGER

Electric shock
The inverter has a high leakage current value.

- ► **Always** connect the ground cable first, then the AC and DC cables.

WARNING

Electric shock
The IP65 protection degree is no longer guaranteed when the door is open.

- ► Only open the door when absolutely necessary.
- ► Do not open the door if water or dirt might enter the inverter.
- ► After work is completed, ensure that the door is properly shut and tightened again. Check that the door is properly sealed.

WARNING

Heavy weight
The inverter is heavy.

- ► Lift and carry the inverter with at least 2 people.

WARNING

Hot surfaces
The surface of the inverter can get very hot during operation.

- Always wear safety gloves when touching the inverter.

It is best to wait before removing the old inverter until you have received the replacement device from Delta Electronics.

There is normally an isolating switch (for example in an equipment wiring box) between the inverter and the grid connection box and between the inverter and the solar modules. This isolates the inverter from all the AC and DC voltage sources and renders it de-energized.

13.1 Special notes on replacement

Delta Electronics will provide you with a fully equipped replacement device and detailed information about the replacement process.

Prior to packing and returning the inverter, remove any optional accessories that you have installed that are not included in the standard scope of delivery:

- Wi-Fi antenna
- Type 1+2 combined AC surge protection devices
- Type 1+2 combined DC surge protection devices
- Feet for ground mounting

If you are continuing to use the components of the old inverter, attach the appropriate parts of the replacement device to the old inverter before returning it to Delta Electronics. This is also necessary to ensure that all openings of the inverter are properly closed and that no moisture can enter during transportation.

Pack the old inverter as well as all the unused components of the replacement device into the box of the replacement device and return everything to Delta Customer Service.

All necessary work steps are described in this chapter.

13.2 Sequence of work steps

Step	Notice	Description in chapter
Disconnect the inverter from AC and DC		“13.4 Disconnecting the inverter from the grid (AC) and solar modules (DC)”, page 149
Remove the communication cable		“13.5 Remove the communication cable”, page 154
Dismantling the type 1+2 combined AC surge protection device	Only necessary if installed.	“13.6 Dismantling the type 1+2 combined AC surge protection device (optional)”, page 155
Dismantling the type 1+2 combined DC surge protection device	Only necessary if installed.	“13.7 Dismantling the type 1+2 combined DC surge protection device (optional)”, page 155
Dismantle the Sub-1G antenna	Only necessary if installed.	“13.8 Dismantling the Sub-1G antenna (optional)”, page 156
Dismantle the Wi-Fi module	Only necessary if installed.	“13.8.1 Dismantling the Wi-Fi module (optional)”, page 156
Removing the inverter		“13.9 Removing and packing the inverter”, page 157
Pack the inverter		“13.9 Removing and packing the inverter”, page 157

13.3 Tools required

In addition to standard tools such as screwdrivers, open-ended wrenches, Allen keys and socket wrenches in various sizes, the following tools are required for working on the inverter:

- Mounting tool for disconnecting the Amphenol plug connectors from the DC cables (included in the scope of delivery)

13.4 Disconnecting the inverter from the grid (AC) and solar modules (DC)

1. To shut off the inverter at the grid, open the load-break switch between the inverter and the grid connection point.

   Secure the load-break switch to prevent it from being switched back on.

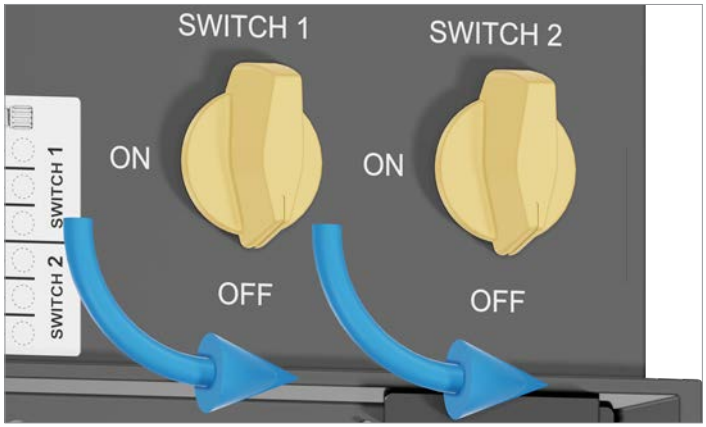

2. Turn both DC disconnectores to the ***OFF*** position.

3. Wait at least 60 seconds until the internal capacitors have discharged.

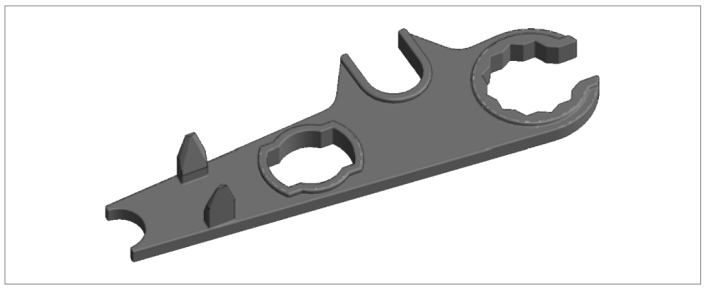

Always use the supplied mounting tools to open the DC connectors.

When disconnecting the DC cables, take care not to damage the connectors.

Do not use force.

Pull out at the DC connector, **not** at the DC cable.

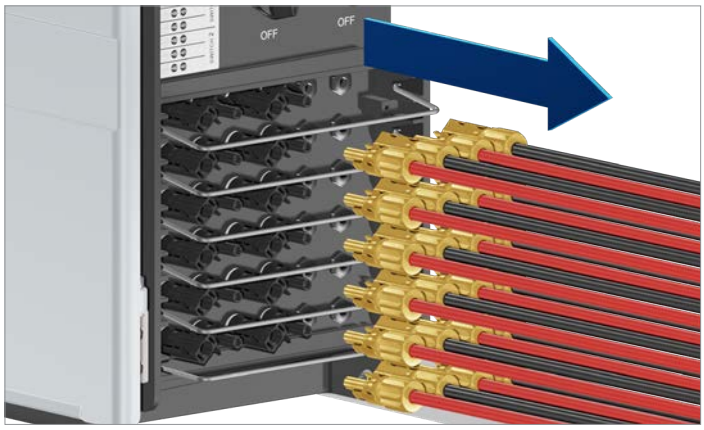

4. Use the mounting tool to release the DC cables and then pull them out.

5. Remove the Allen key from the upper door lock.

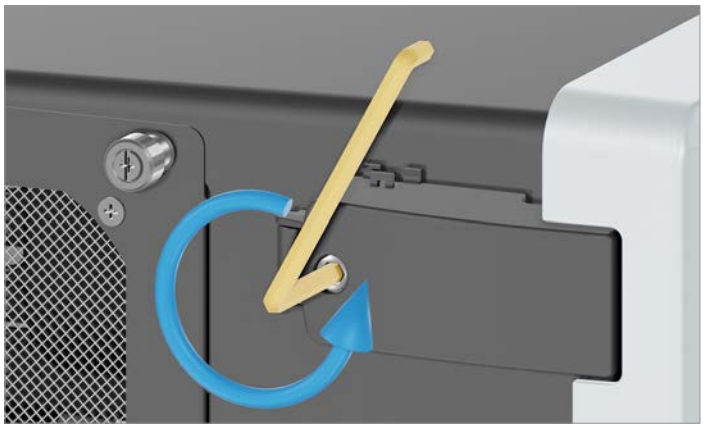

6. Unscrew and open the upper door lock cover.

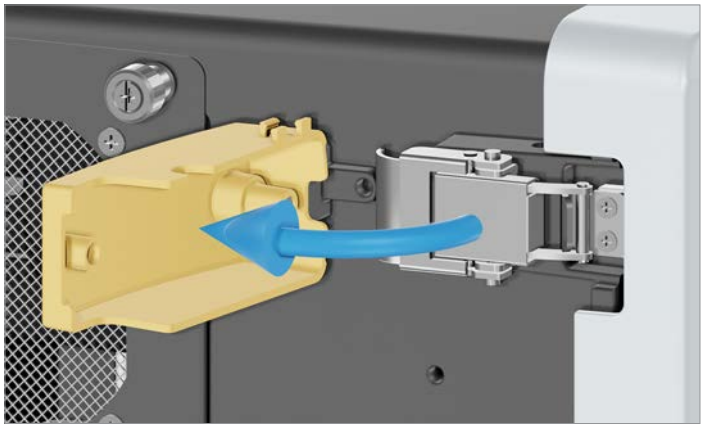

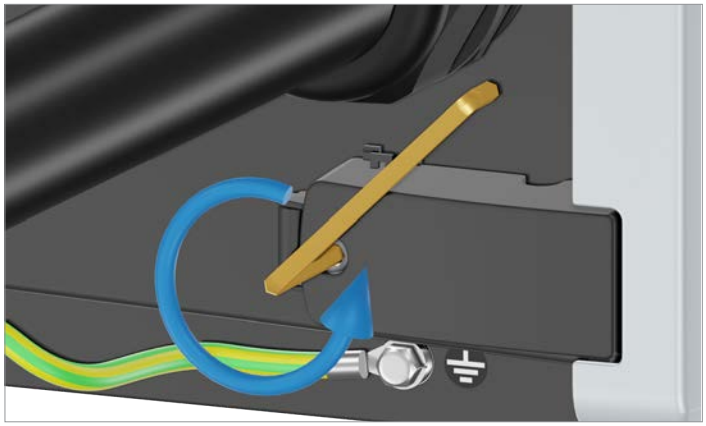

7. Unscrew and open the lower door lock cover.

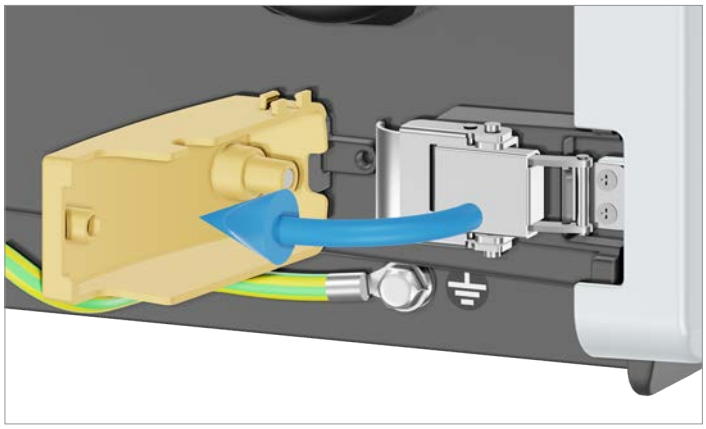

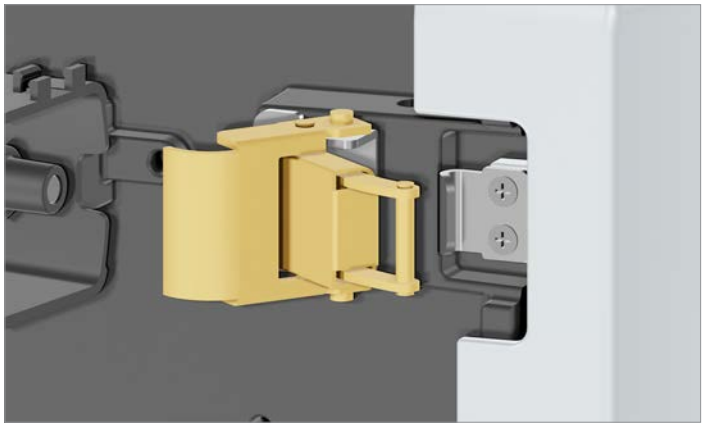

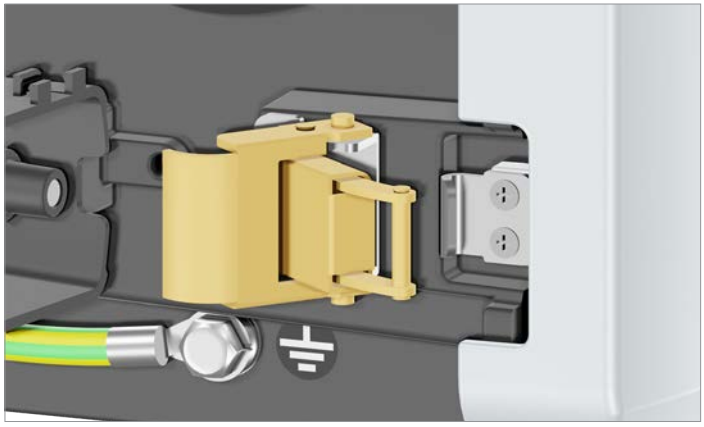

8. Open the upper and lower door lock.

9. Open the door and secure it on top with the Allen key.

10. Use a voltmeter to check that there is no more voltage at the AC terminal block.
    → If you detect voltage, open the AC power external load isolating switch.
    → If you detect no voltage, continue to the next step.

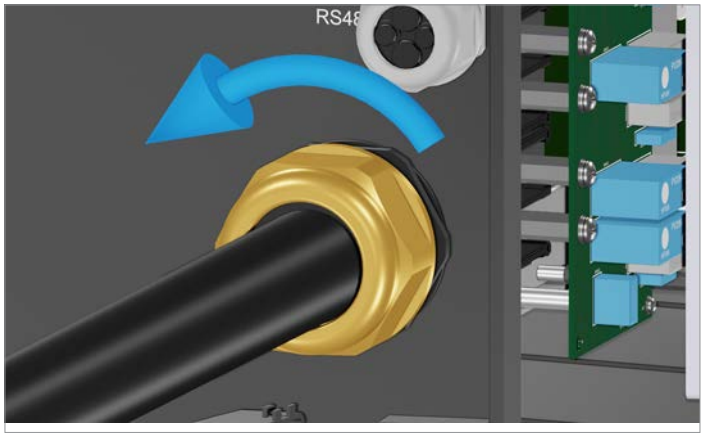

11. Unscrew the AC cable gland.

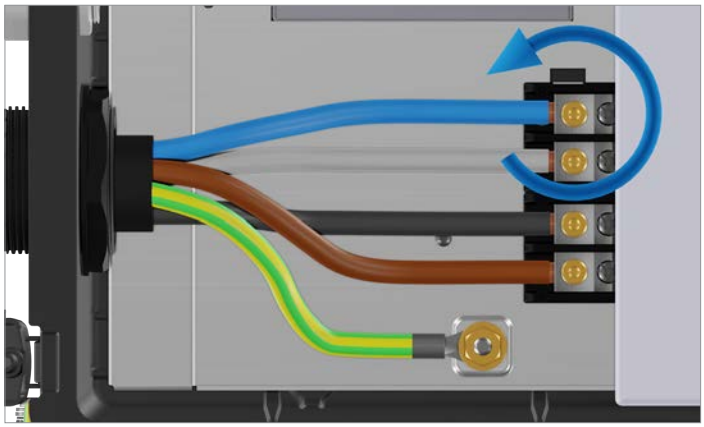

12. Unscrew the conductors of the AC cable and pull out the AC cable.

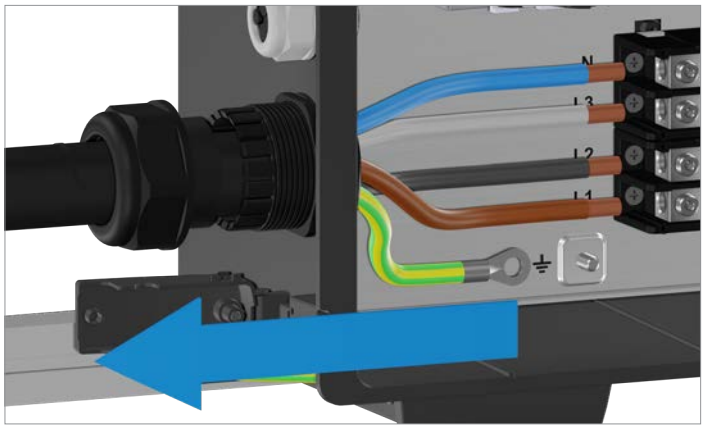
N
L3
L2
L1

13.5 Remove the communication cable

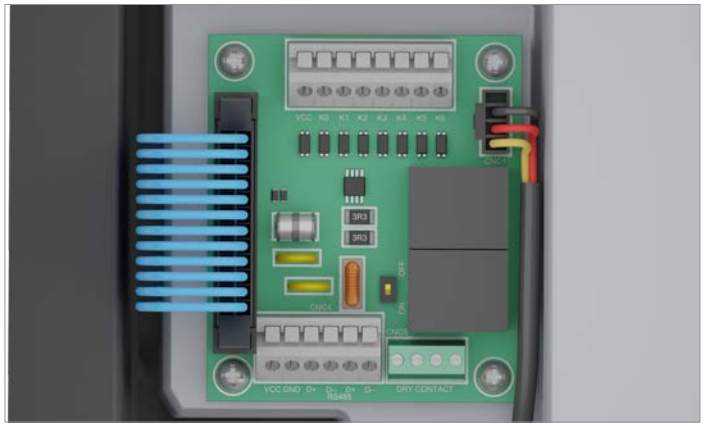

1. Remove all cables from the communication card.

2. Unscrew the cable gland of the communication connection and remove the cable, cable gland and seal.

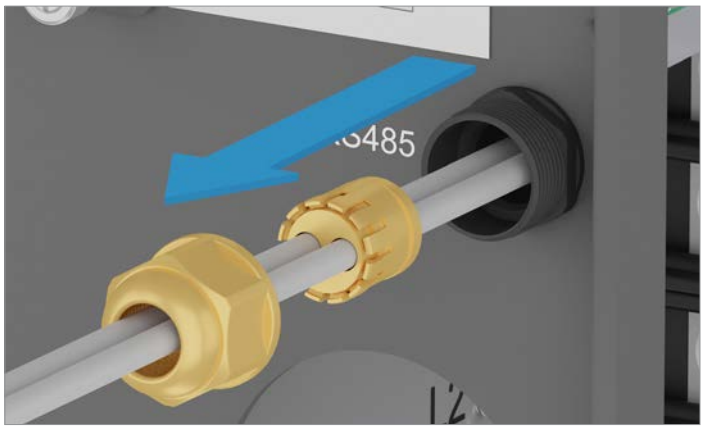

13.6 Dismantling the type 1+2 combined AC surge protection device (optional)

If you have installed the type 1+2 combined AC surge protection devices, you must remove them (see “11.8.2 Remove the type 1+2 combined AC surge protection device”, page 121) before returning the inverter.

Only type 2 AC surge protection devices are supplied with the replacement unit.

13.7 Dismantling the type 1+2 combined DC surge protection device (optional)

If you have installed the type 1+2 combined DC surge protection devices, you must remove them (see “11.7.1 Remove the DC surge protection device”, page 114) before returning the inverter.

Only type 2 DC surge protection devices are supplied with the replacement unit.

13.8 Dismantling the Sub-1G antenna (optional)

See “11.10.2 Removing the Sub-1G antenna”, page 134 for a description.

13.8.1 Dismantling the Wi-Fi module (optional)

If you have installed the Wi-Fi module, you must remove it (see “11.11.2 Removing the Wi-Fi module”, page 138) before returning the inverter.

The replacement device does not come with a Wi-Fi module.

13.9 Removing and packing the inverter

WARNING

Heavy weight
The inverter is heavy.
► Lift and carry the inverter with at least 2 people.

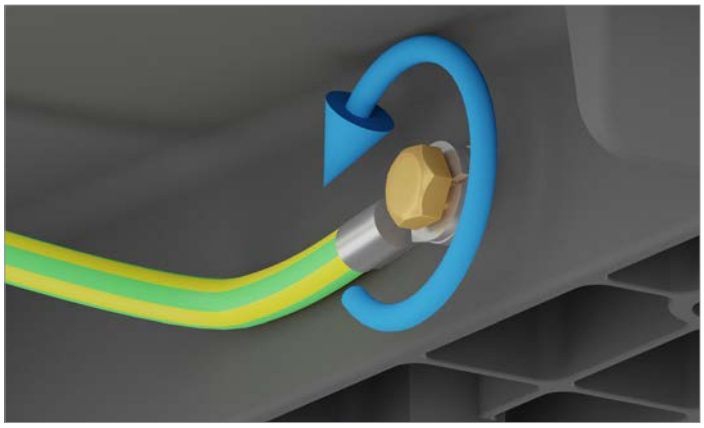

1. Unscrew the grounding cable on the inverter.

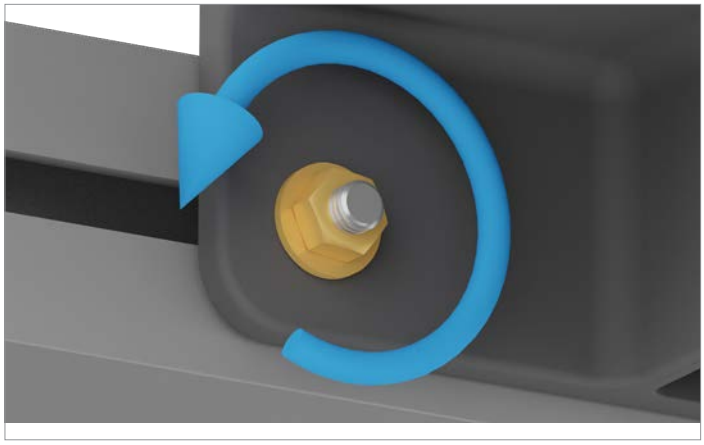

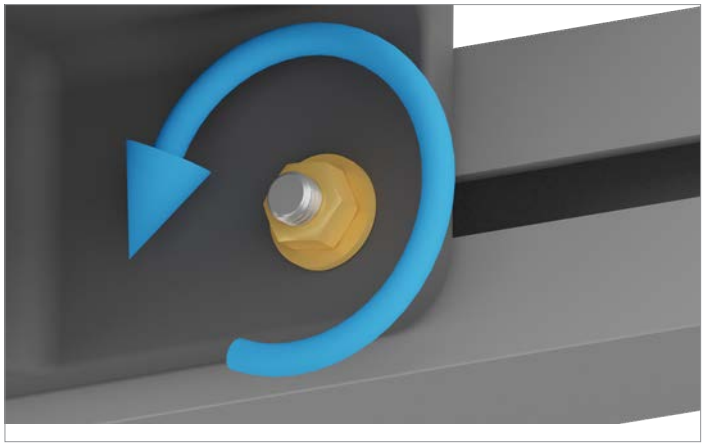

2. Unscrew the inverter from the bottom left and right of the wall or the mounting system.

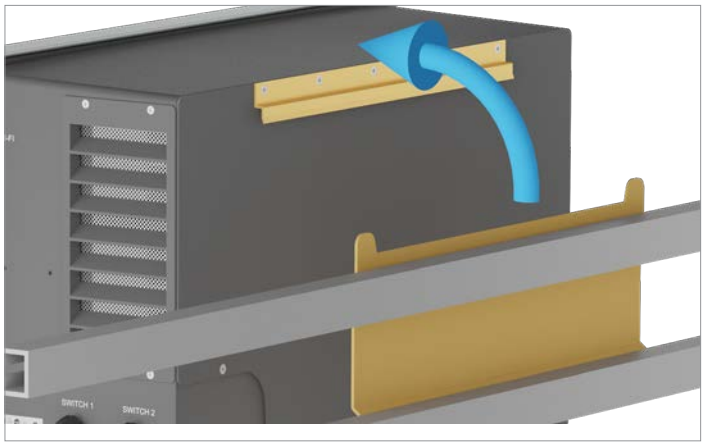

3. Lift the inverter out of the mounting plate and place it in the box of the replacement device.

4. Place all components of the replacement device that will not be needed back into the box.

5. Package and ship the old inverter in accordance with the description received from Delta Customer Service.

6. Install and commission the new inverter in accordance with the installation instructions supplied.

14. Technical Data

Input (DC)	M50A
Maximum input power (per MPP Tracker/total)	11.7 kW / 58,0 kW
Rated power	50 kW
Input voltage range for operation	200 to 1000 V_{DC}
Maximum input voltage	1100 V_{DC} [1)]
Nominal voltage	600 V_{DC}
number of MPP trackers	6
MPP input voltage range total	200 to 1000 V_{DC}
Asymmetrical design	9.6 kW / 11,7 kW
Maximum input current (per MPP Tracker/total)	26 A / 132 A
DC short-circuit current I_{SC}	50 A per MPP tracker
Open-circuit voltage V_{OC}	1000 V_{DC}/1100 V_{DC} without damage
DC connector panel	
Connector type	Amphenol H4 connector
Number of DC connections	12 pairs
DC cable specifications	4/6 mm^2
Use of external string fuses	1 or 2 strings per MPPT: no external string fuses required
Overvoltage category [2)]	II
Surge protection devices	Type 2 (EN 50539- 11) replaceable, type 1+2 combined, upgradeable
Galvanic isolation	No

Output (AC)	M50A
Maximum apparent power	55 kVA [4)]
Maximum active power	55 kW [4) 5)]
Rated apparent power	50 kVA [4)]
Rated voltage [6)]	230 / 400 V -20%/+30%, 3 phases + PE (△), 3 phases + N + PE (Y)
Rated current	72.5 A
Maximum current	83 A
Frequency range [6)]	50 / 60 Hz ± 5 Hz
Adjustment range power factor	0.8 cap. to 0.8 ind. (0.9 cap. to 0.9 ind. at maximum active power)
Total harmonic distortion	<3% at rated apparent power
Power consumption in night mode	<3.5 W [7)]
AC connection	
Connector type	L1, L2, L3, N: Terminal with hexagon socket screw
	PE: M10 threaded bolt with nut
Copper cable specifications	16 to 60 mm^2 (single wire, multi-wire, fine-wire with wire end sleeve)
Aluminum cable specifications	25 to 60 mm^2 (round single-wire, round multi-wire, sector-shaped)
Overvoltage category [2)]	III
Surge protection devices [7)]	Type 2 (EN 61463- 11) replaceable, type 1+2 combined, upgradeable

Mechanical details	M50A
Dimensions (W x H x D)	699 × 629 × 264 mm
Weight	64 kg
Cooling	1 fan module containing 3 fans for circulating ambient air, replaceable
	2x internal fans for preventing heat buildup, replaceable
Mounting options	suspended (mounting plate included in the scope of delivery)
	free-standing (mounting feet available as an accessory)

Communication and Data Visualization	
Communication interfaces	2x RS485, 2x dry contacts, 1x EPO, 1x 12 V_{DC} power supply, 6x digital inputs
Communication	RS485, Sub-1G, Wi-Fi (optional)
Communication protocols	Modbus RTU

General specifications	M50A
Delta model name	M50A_260
Delta part number	RPI503M260000
Overall operating temperature range	-25 to +60 °C
Reltaive humidity	0 to 100%, non-condensing
Max. operating height	4000 m above sea level
Noise level	<65 dB(A)

Standards and guidelines	M50A
Protection degree	IP66
Safety class	II
Pollution degree	II
Overload behavior	Current limitation, power limitation
Safety	IEC 62109-1/-2, CE compliance
EMC	EN 61000-6-2/-6-3/-3-11/-3-12
Noise immunity	IEC 61000-4-2/-3/-4/-5/-6/-8
Distortion factor	EN 61000-3-2
Voltage fluctuations and flicker	EN 61000-3-3
Grid connection guidelines	You will find the current list at solarsolutions.delta-emea.com

1) The maximum withstand voltage is 1100 V_{DC}. The inverter starts to work if the input voltage falls below 1000 V_{DC}.
2) IEC 60664-1, IEC 62109-1
3) For cos phi = 1 (VA = W)
4) At ambient temperatures ≤ 40°C
5) AC voltage and frequency range will be programmed according to the individual country requirements.
6) Power consumption with standby communication

Delta Customer Service

Send an email to: solarsupport.emea@deltaww.com

Austria	0800 291 512 (toll free)
Belgium	0800 711 35 (toll free)
Bulgaria	+421 42 4661 333
Czech Republic	800 143 047 (toll free)
Denmark	8025 0986 (toll free)
France	0800 919 816 (toll free)
Germany	0800 800 9323 (toll free)
Great Britain	0800 051 4281 (toll free)
Greece	+49 7641 455 549
Israel	800 787 920 (toll free)
Italy	800 787 920 (toll free)
Netherlands	0800 022 1104 (toll free)
Poland	+48 22 335 26 00
Portugal	+49 7641 455 549
Slovakia	0800 005 193 (toll free)
Slovenia	+421 42 4661 333
Spain	900 958 300 (toll free)
Switzerland	0800 838 173 (toll free)
Turkey	+421 42 4661 333
Other European countries	+49 7641 455 549

© Copyright – Delta Electronics (Netherlands) B.V. – All rights reserved.
All information and specifications can be modified without prior notice.
Installation and Operation Manual M50A_260 RPI503M260000 Product version L or M EU V1.3 EN 2023-03-30