Cisco 800 Series Integrated Services Router Hardware Installation Guide

July 31, 2016

Cisco Systems, Inc.
www.cisco.com

Cisco has more than 200 offices worldwide. Addresses, phone numbers, and fax numbers are listed on the Cisco website at www.cisco.com/go/offices.

THE SPECIFICATIONS AND INFORMATION REGARDING THE PRODUCTS IN THIS MANUAL ARE SUBJECT TO CHANGE WITHOUT NOTICE. ALL STATEMENTS, INFORMATION, AND RECOMMENDATIONS IN THIS MANUAL ARE BELIEVED TO BE ACCURATE BUT ARE PRESENTED WITHOUT WARRANTY OF ANY KIND, EXPRESS OR IMPLIED. USERS MUST TAKE FULL RESPONSIBILITY FOR THEIR APPLICATION OF ANY PRODUCTS.

THE SOFTWARE LICENSE AND LIMITED WARRANTY FOR THE ACCOMPANYING PRODUCT ARE SET FORTH IN THE INFORMATION PACKET THAT SHIPPED WITH THE PRODUCT AND ARE INCORPORATED HEREIN BY THIS REFERENCE. IF YOU ARE UNABLE TO LOCATE THE SOFTWARE LICENSE OR LIMITED WARRANTY, CONTACT YOUR CISCO REPRESENTATIVE FOR A COPY.

The following information is for FCC compliance of Class A devices: This equipment has been tested and found to comply with the limits for a Class A digital device, pursuant to part 15 of the FCC rules. These limits are designed to provide reasonable protection against harmful interference when the equipment is operated in a commercial environment. This equipment generates, uses, and can radiate radio-frequency energy and, if not installed and used in accordance with the instruction manual, may cause harmful interference to radio communications. Operation of this equipment in a residential area is likely to cause harmful interference, in which case users will be required to correct the interference at their own expense.

The following information is for FCC compliance of Class B devices: This equipment has been tested and found to comply with the limits for a Class B digital device, pursuant to part 15 of the FCC rules. These limits are designed to provide reasonable protection against harmful interference in a residential installation. This equipment generates, uses and can radiate radio frequency energy and, if not installed and used in accordance with the instructions, may cause harmful interference to radio communications. However, there is no guarantee that interference will not occur in a particular installation. If the equipment causes interference to radio or television reception, which can be determined by turning the equipment off and on, users are encouraged to try to correct the interference by using one or more of the following measures:

- Reorient or relocate the receiving antenna.
- Increase the separation between the equipment and receiver.
- Connect the equipment into an outlet on a circuit different from that to which the receiver is connected.
- Consult the dealer or an experienced radio/TV technician for help.

Modifications to this product not authorized by Cisco could void the FCC approval and negate your authority to operate the product.

The Cisco implementation of TCP header compression is an adaptation of a program developed by the University of California, Berkeley (UCB) as part of UCB's public domain version of the UNIX operating system. All rights reserved. Copyright © 1981, Regents of the University of California.

NOTWITHSTANDING ANY OTHER WARRANTY HEREIN, ALL DOCUMENT FILES AND SOFTWARE OF THESE SUPPLIERS ARE PROVIDED "AS IS" WITH ALL FAULTS. CISCO AND THE ABOVE-NAMED SUPPLIERS DISCLAIM ALL WARRANTIES, EXPRESSED OR IMPLIED, INCLUDING, WITHOUT LIMITATION, THOSE OF MERCHANTABILITY, FITNESS FOR A PARTICULAR PURPOSE AND NONINFRINGEMENT OR ARISING FROM A COURSE OF DEALING, USAGE, OR TRADE PRACTICE.

IN NO EVENT SHALL CISCO OR ITS SUPPLIERS BE LIABLE FOR ANY INDIRECT, SPECIAL, CONSEQUENTIAL, OR INCIDENTAL DAMAGES, INCLUDING, WITHOUT LIMITATION, LOST PROFITS OR LOSS OR DAMAGE TO DATA ARISING OUT OF THE USE OR INABILITY TO USE THIS MANUAL, EVEN IF CISCO OR ITS SUPPLIERS HAVE BEEN ADVISED OF THE POSSIBILITY OF SUCH DAMAGES.

Cisco and the Cisco logo are trademarks or registered trademarks of Cisco and/or its affiliates in the U.S. and other countries. To view a list of Cisco trademarks, go to this URL: www.cisco.com/go/trademarks. Third-party trademarks mentioned are the property of their respective owners. The use of the word partner does not imply a partnership relationship between Cisco and any other company. (1721R)

Any Internet Protocol (IP) addresses and phone numbers used in this document are not intended to be actual addresses and phone numbers. Any examples, command display output, network topology diagrams, and other figures included in the document are shown for illustrative purposes only. Any use of actual IP addresses or phone numbers in illustrative content is unintentional and coincidental.

Cisco 800 Series Integrated Services Router Hardware Installation Guide
© 2016 Cisco Systems, Inc. All rights reserved.

Preface vii

Objective vii

Audience vii

Organization viii

Conventions viii

Related Documentation xvi

Searching Cisco Documents xvi

Obtaining Documentation and Submitting a Service Request xvi

Product Overview 1-1

Cisco 810 Series 1-1

Cisco 812 Series 1-1

General Description 1-1

Hardware Features 1-4

SKU Information 1-9

Cisco 819 Series 1-10

General Description 1-10

SKU Information 1-14

Hardware Features 1-23

Cisco 860, 880, 890 Series 1-38

General Description 1-39

Cisco 860 Series ISRs 1-39

Cisco 860VAE Series ISRs 1-41

Interfaces 1-41

IOS Images 1-41

Cisco 860VAE-W-A-K9, Cisco 860VAE-W-E-K9, and Cisco 860VAE-POE-W-A-K9 ISRs 1-43

Model-Specific Features 1-43

Common Features 1-44

Cisco 880 Series ISRs 1-47

Cisco 880 Series Data Routers 1-48

Cisco 880 Series Voice and Data Routers 1-51

Cisco 880 Series with Embedded WLAN Antennas 1-57

C881G-B/S/V-K9 ISRs 1-59

C881GW-S/V-A-K9 ISRs 1-59

C881G-U-K9 ISRs 1-60
HSPA+ Versions of the Fixed-Platform ISRs 1-60
Cisco C881, C886, and C887 Series ISRs 1-60
Cisco C881 Router 1-61
Cisco C886VA Router 1-62
Cisco C886VAJ Router 1-63
Cisco C887VA Router 1-64
Cisco C887VAM Router 1-65
Cisco C888 Integrated Services Router 1-67
Cisco C880 Series and Cisco C890 Series 4G LTE Integrated Services Routers 1-70
Cisco C881G-4G Integrated Services Router 1-79
Cisco C886VAG-LTE 1-82
Cisco C887VAG-4G Integrated Services Router 1-85
Cisco C896VAG-LTE Integrated Services Router 1-88
Cisco C897VAG-LTE Integrated Service Router 1-92
Cisco C898EAG-LTE Integrated Service Router 1-95
Cisco C899G-LTE Integrated Service Router 1-99
Cisco 890 Series Integrated Service Routers 1-104
Cisco 891, Cisco 892, and Cisco 892F 1-104
Cisco C897VAB-K9 1-114
Cisco C891 Series ISRs 1-117
Cisco C891F Router 1-117
Cisco C891FW Router 1-119
Cisco C891-24X/K9 Integrated Services Router 1-121
Hardware Features 1-122
Kensington Lock 1-123
Reset Button 1-123
LEDs 1-125
Memory 1-131
USB Port 1-132
Fan 1-133
Power Supply 1-133
Power over Ethernet Module 1-133
3G Cellular Data WAN Connectivity 1-134
Small Form-Factor Pluggable Port 1-136
Feature Summary 1-136

Installing the Router 2-1

Installing the Cisco 810 ISR 2-1
Installing the Cisco 812 ISR 2-1

Items Shipped with your Router 2-2
Items Shipped with your PoE+ Splitter 2-2
Installing the Cisco PoE+ Splitter 2-2
Grounding the Cisco 812 ISR 2-18
Installing the Cisco 819 ISR 2-19
Installing the Router 2-22
Mounting the DC Power Supply 2-39
Installing the Cisco 860, 880, 890 ISR 2-40
Equipment, Tools, and Connections 2-41
Items Shipped with your Router 2-41
Additional Items 2-41
Connections 2-42
Ethernet Devices 2-42
Installing the Cisco 860, 880, and 890 Series Routers 2-42
Warnings 2-42
Installing on a Table 2-43
Mounting on a Wall 2-43
Installing the Router Ground Connection 2-46
Installing the FIPS Cover 2-46
Installing Antennas for Cisco 890 Series 2-50
Installing Cisco 890 Series in a Rack 2-54
Installing the C881G-B/S/V-K9 ISR 2-56
Installing Antennas 2-56
Installing the C881GW-S/V-A-K9 ISR 2-56
Installing Antennas 2-56
Installing the C881G-U-K9 ISR 2-56
Installing the Cisco 880G for 3.7G (HSPA+)/3.5G (HSPA) ISRs 2-58

Connecting the Router 3-1

Cisco 810 Series 3-1
Cisco 819 Series 3-1
Preparing to Connect the Router 3-1
Connecting a PC, Server, or Workstation 3-2
Connecting an External Ethernet Switch 3-3
Connecting a Terminal or PC to the Console Port 3-4
Connecting a Modem to the Console Port 3-5
Connecting the AC Adapter 3-5
Connecting the DC Adapter 3-6
Verifying Connections 3-7
Cisco 860, 880, 890 Series 3-8

Safety Warnings 3-9
Preparing to Connect the Router 3-10
Preventing Damage to the Router 3-11
Connecting a PC, Server, or Workstation 3-12
Connecting a Phone 3-13
Connecting an External Ethernet Switch 3-14
Connecting the V.92 modem Port 3-15
Connecting a Terminal or PC to the Console Port 3-16
Terminal Emulator Settings 3-16
Connecting a Modem to the Auxiliary Port 3-17
Connecting the 3G Card 3-18
Installing the 3G Adapter for Extended Cable/Antenna 3-24
Connecting a Data BRI Port 3-28
Connecting an FE Line to an FE WAN Port 3-30
Connecting a GE Line to an GE WAN Port 3-31
Connecting an xDSL Line 3-31
Connecting Power over Ethernet 3-34
Connecting the AC Adapter 3-35
Connecting an FXS Line 3-39
Connecting an FXO Line 3-40
Connecting a Voice ISDN BRI Line 3-42
Verifying Connections 3-45

Initial Configuration 4-1

Cisco 810 Series 4-1
Cisco 819 Series 4-1
Cisco IOS CLI 4-1
Setup Command Facility 4-1
Verifying the Initial Configuration 4-2
Cisco 860, 880, 890 Series 4-2
Cisco Configuration Professional Express 4-2
Cisco IOS CLI 4-2
Setup Command Facility 4-4
Verifying the Initial Configuration 4-6
Initial Configuration of the Wireless Access Point 4-7

Technical Specifications A-1

Cisco 810 Series A-1
Cisco 812 Series A-1
Router Specifications A-1

Mean Time Between Failure Ground Benign Environment A-4
Cisco 819 Series A-4
Router Specifications A-4
Mean Time Between Failure Ground Benign Environment A-8
Supported Power Adapters A-9
Cisco 860, 880, 890 Series A-11
Router Specifications A-12
All Models Except Cisco 860VAE Series A-12
Cisco 860VAE Series A-14
Cisco 860VAE-W-A-K9, Cisco 860VAE-W-E-K9, and Cisco 860VAE-POE-W-A-K9 Series A-15
Cisco 870 Series A-16
Cisco 880 Series A-17
Cisco 880G Series 3G Wireless Integrated Services Router A-19
Cisco 880VA Series A-19
Cisco 890 Series A-21
Power Supply A-22
Wireless Access Point A-22
FE and GE Port Pinouts A-23
Console and Auxiliary Port Connector Pinouts A-24
FXS and FXO Port Connector Pinouts A-24
VDSL2 Port Connector Pinouts A-24
ADSL2+ Port Connector Pinouts A-25
V.92 Port Connector Pinouts A-25
G.SHDSL Port Connector Pinouts A-25
Data BRI Port Connector Pinouts A-26
Voice ISDN BRI Interface Pin Numbers and Functions A-27
SFP Port Connector Pinouts A-27
Cable Specifications A-28
Ethernet Cable Specifications A-28
Maximum Cable Length A-28

Preface

This preface describes the objectives, audience, organization, and conventions of this guide and describes related documents that have additional information. It contains the following sections:

- Objective, page vii
- Audience, page vii
- Organization, page viii
- Conventions, page viii
- Related Documentation, page xvi
- Searching Cisco Documents, page xvi
- Obtaining Documentation and Submitting a Service Request, page xvii

Objective

This guide provides an overview and explains how to install, connect, and perform initial configuration for the following series:

- Cisco 810 series ISRs that include both Cisco 812 series and 819 series ISRs
- Wireless and non-wireless Cisco 860 series, Cisco 880 series, and Cisco 890 Integrated Services Routers (ISRs)

Audience

This guide is intended for Cisco equipment providers who are technically knowledgeable and familiar with Cisco routers and Cisco IOS software and features.

Organization

This guide is organized into the following chapters and appendix.

Chapter	Name	Description
Chapter 1	Chapter 1, “Product Overview”	Describes the router models and the hardware features available.
Chapter 2	Chapter 2, “Installing the Router”	Lists the items shipped with the router, the equipment and tools necessary for installing the router, the safety warnings and guidelines, and the procedures for installing the router.
Chapter 3	Chapter 3, “Connecting the Router”	Describes typical connections for the router, procedures for connecting the router to various devices, and how to verify the connections.
Chapter 4	Chapter 4, “Initial Configuration”	Provides the procedures for initially configuring the router settings.
Appendix A	Appendix A, “Technical Specifications”	Provides the router, port, and cabling specifications.

Conventions

This section describes the conventions used in this guide.

Note Means *reader take note*. Notes contain helpful suggestions or references to additional information and material.

Caution This symbol means *reader be careful*. In this situation, you might do something that could result in equipment damage or loss of data.

Tip Means *the following information will help you solve a problem*. The tip information might not be troubleshooting or even an action, but could be useful information.

Warning **IMPORTANT SAFETY INSTRUCTIONS**

This warning symbol means danger. You are in a situation that could cause bodily injury. Before you work on any equipment, be aware of the hazards involved with electrical circuitry and be familiar with standard practices for preventing accidents. Use the statement number provided at the end of each warning to locate its translation in the translated safety warnings that accompanied this device. Statement 1071

SAVE THESE INSTRUCTIONS

Waarschuwing **BELANGRIJKE VEILIGHEIDSINSTRUCTIES**

Dit waarschuwingssymbool betekent gevaar. U verkeert in een situatie die lichamelijk letsel kan veroorzaken. Voordat u aan enige apparatuur gaat werken, dient u zich bewust te zijn van de bij elektrische schakelingen betrokken risico's en dient u op de hoogte te zijn van de standaard praktijken om ongelukken te voorkomen. Gebruik het nummer van de verklaring onderaan de waarschuwing als u een vertaling van de waarschuwing die bij het apparaat wordt geleverd, wilt raadplegen.

BEWAAR DEZE INSTRUCTIES

Varoitus **TÄRKEITÄ TURVALLISUUSOHJEITA**

Tämä varoitusmerkki merkitsee vaaraa. Tilanne voi aiheuttaa ruumiillisia vammoja. Ennen kuin käsittelet laitteistoa, huomioi sähköpiirien käsittelemiseen liittyvät riskit ja tutustu onnettomuuksien yleisiin ehkäisytapoihin. Turvallisuusvaroitusten käännökset löytyvät laitteen mukana toimitettujen käännettyjen turvallisuusvaroitusten joukosta varoitusten lopussa näkyvien lausuntonumeroiden avulla.

SÄILYTÄ NÄMÄ OHJEET

Attention **IMPORTANTES INFORMATIONS DE SÉCURITÉ**

Ce symbole d'avertissement indique un danger. Vous vous trouvez dans une situation pouvant entraîner des blessures ou des dommages corporels. Avant de travailler sur un équipement, soyez conscient des dangers liés aux circuits électriques et familiarisez-vous avec les procédures couramment utilisées pour éviter les accidents. Pour prendre connaissance des traductions des avertissements figurant dans les consignes de sécurité traduites qui accompagnent cet appareil, référez-vous au numéro de l'instruction situé à la fin de chaque avertissement.

CONSERVEZ CES INFORMATIONS

Warnung **WICHTIGE SICHERHEITSHINWEISE**

Dieses Warnsymbol bedeutet Gefahr. Sie befinden sich in einer Situation, die zu Verletzungen führen kann. Machen Sie sich vor der Arbeit mit Geräten mit den Gefahren elektrischer Schaltungen und den üblichen Verfahren zur Vorbeugung vor Unfällen vertraut. Suchen Sie mit der am Ende jeder Warnung angegebenen Anweisungsnummer nach der jeweiligen Übersetzung in den übersetzten Sicherheitshinweisen, die zusammen mit diesem Gerät ausgeliefert wurden.

BEWAHREN SIE DIESE HINWEISE GUT AUF.

Avvertenza **IMPORTANTI ISTRUZIONI SULLA SICUREZZA**

Questo simbolo di avvertenza indica un pericolo. La situazione potrebbe causare infortuni alle persone. Prima di intervenire su qualsiasi apparecchiatura, occorre essere al corrente dei pericoli relativi ai circuiti elettrici e conoscere le procedure standard per la prevenzione di incidenti. Utilizzare il numero di istruzione presente alla fine di ciascuna avvertenza per individuare le traduzioni delle avvertenze riportate in questo documento.

CONSERVARE QUESTE ISTRUZIONI

Advarsel **VIKTIGE SIKKERHETSINSTRUKSJONER**

Dette advarselssymbolet betyr fare. Du er i en situasjon som kan føre til skade på person. Før du begynner å arbeide med noe av utstyret, må du være oppmerksom på farene forbundet med elektriske kretser, og kjenne til standardprosedyrer for å forhindre ulykker. Bruk nummeret i slutten av hver advarsel for å finne oversettelsen i de oversatte sikkerhetsadvarslene som fulgte med denne enheten.

TA VARE PÅ DISSE INSTRUKSJONENE

Aviso **INSTRUÇÕES IMPORTANTES DE SEGURANÇA**

Este símbolo de aviso significa perigo. Você está em uma situação que poderá ser causadora de lesões corporais. Antes de iniciar a utilização de qualquer equipamento, tenha conhecimento dos perigos envolvidos no manuseio de circuitos elétricos e familiarize-se com as práticas habituais de prevenção de acidentes. Utilize o número da instrução fornecido ao final de cada aviso para localizar sua tradução nos avisos de segurança traduzidos que acompanham este dispositivo.

GUARDE ESTAS INSTRUÇÕES

¡Advertencia! **INSTRUCCIONES IMPORTANTES DE SEGURIDAD**

Este símbolo de aviso indica peligro. Existe riesgo para su integridad física. Antes de manipular cualquier equipo, considere los riesgos de la corriente eléctrica y familiarícese con los procedimientos estándar de prevención de accidentes. Al final de cada advertencia encontrará el número que le ayudará a encontrar el texto traducido en el apartado de traducciones que acompaña a este dispositivo.

GUARDE ESTAS INSTRUCCIONES

Varning! **VIKTIGA SÄKERHETSANVISNINGAR**

Denna varningssignal signalerar fara. Du befinner dig i en situation som kan leda till personskada. Innan du utför arbete på någon utrustning måste du vara medveten om farorna med elkretsar och känna till vanliga förfaranden för att förebygga olyckor. Använd det nummer som finns i slutet av varje varning för att hitta dess översättning i de översatta säkerhetsvarningar som medföljer denna anordning.

SPARA DESSA ANVISNINGAR

Figyelem

중요 안전 지침

이 경고 기호는 위험을 나타냅니다. 작업자가 신체 부상을 일으킬 수 있는 위험한 환경에 있습니다. 장비에 작업을 수행하기 전에 전기 회로와 관련된 위험을 숙지하고 표준 작업 관례를 숙지하여 사고를 방지하십시오. 각 경고의 마지막 부분에 있는 경고문 번호를 참조하여 이 장치와 함께 제공되는 번역된 안전 경고문에서 해당 번역문을 찾으십시오.

이 지시 사항을 보관하십시오.

Предупреждение

ВАЖНЫЕ ИНСТРУКЦИИ ПО СОБЛЮДЕНИЮ ТЕХНИКИ БЕЗОПАСНОСТИ

Этот символ предупреждения обозначает опасность. То есть имеет место ситуация, в которой следует опасаться телесных повреждений. Перед эксплуатацией оборудования выясните, каким опасностям может подвергаться пользователь при использовании электрических цепей, и ознакомьтесь с правилами техники безопасности для предотвращения возможных несчастных случаев. Воспользуйтесь номером заявления, приведенным в конце каждого предупреждения, чтобы найти его переведенный вариант в переводе предупреждений по безопасности, прилагаемом к данному устройству.

СОХРАНИТЕ ЭТИ ИНСТРУКЦИИ

警告

重要的安全性说明

此警告符号代表危险。您正处于可能受到严重伤害的工作环境中。在您使用设备开始工作之前，必须充分意识到触电的危险，并熟练掌握防止事故发生的标准工作程序。请根据每项警告结尾提供的声明号码来找到此设备的安全性警告说明的翻译文本。

请保存这些安全性说明

警告

安全上の重要な注意事項

「危険」の意味です。人身事故を予防するための注意事項が記述されています。装置の取り扱い作業を行うときは、電気回路の危険性に注意し、一般的な事故防止策に留意してください。警告の各国語版は、各注意事項の番号を基に、装置に付属の「Translated Safety Warnings」を参照してください。

これらの注意事項を保管しておいてください。

주의

중요 안전 지침

이 경고 기호는 위험을 나타냅니다. 작업자가 신체 부상을 일으킬 수 있는 위험한 환경에 있습니다. 장비에 작업을 수행하기 전에 전기 회로와 관련된 위험을 숙지하고 표준 작업 관례를 숙지하여 사고를 방지하십시오. 각 경고의 마지막 부분에 있는 경고문 번호를 참조하여 이 장치와 함께 제공되는 번역된 안전 경고문에서 해당 번역문을 찾으십시오.

이 지시 사항을 보관하십시오.

Aviso **INSTRUÇÕES IMPORTANTES DE SEGURANÇA**

Este símbolo de aviso significa perigo. Você se encontra em uma situação em que há risco de lesões corporais. Antes de trabalhar com qualquer equipamento, esteja ciente dos riscos que envolvem os circuitos elétricos e familiarize-se com as práticas padrão de prevenção de acidentes. Use o número da declaração fornecido ao final de cada aviso para localizar sua tradução nos avisos de segurança traduzidos que acompanham o dispositivo.

GUARDE ESTAS INSTRUÇÕES

Advarsel **VIGTIGE SIKKERHEDSANVISNINGER**

Dette advarselssymbol betyder fare. Du befinder dig i en situation med risiko for legemesbeskadigelse. Før du begynder arbejde på udstyr, skal du være opmærksom på de involverede risici, der er ved elektriske kredsløb, og du skal sætte dig ind i standardprocedurer til undgåelse af ulykker. Brug erklæringsnummeret efter hver advarsel for at finde oversættelsen i de oversatte advarsler, der fulgte med denne enhed.

GEM DISSE ANVISNINGER

تحذير **إرشادات الأمان الهامة**

يوضح رمز التحذير هذا وجود خطر. وهذا يعني أنك متواجد في مكان قد ينتج عنه التعرض لإصابات. قبل بدء العمل، احذر مخاطر التعرض للصدمات الكهربائية وكن على علم بالإجراءات القياسية للحيلولة دون وقوع أي حوادث. استخدم رقم البيان الموجود في أخر كل تحذير لتحديد مكان ترجمته داخل تحذيرات الأمان المترجمة التي تأتي مع الجهاز.
قم بحفظ هذه الإرشادات

Upozorenje **VAŽNE SIGURNOSNE NAPOMENE**

Ovaj simbol upozorenja predstavlja opasnost. Nalazite se u situaciji koja može prouzročiti tjelesne ozljede. Prije rada s bilo kojim uređajem, morate razumjeti opasnosti vezane uz električne sklopove, te biti upoznati sa standardnim načinima izbjegavanja nesreća. U prevedenim sigurnosnim upozorenjima, priloženima uz uređaj, možete prema broju koji se nalazi uz pojedino upozorenje pronaći i njegov prijevod.

SAČUVAJTE OVE UPUTE

DŮLEŽITÉ BEZPEČNOSTNÍ POKYNY

Tento upozorňující symbol označuje nebezpečí. Jste v situaci, která by mohla způsobit nebezpečí úrazu. Před prací na jakémkoliv vybavení si uvědomte nebezpečí související s elektrickými obvody a seznamte se se standardními opatřeními pro předcházení úrazům. Podle čísla na konci každého upozornění vyhledejte jeho překlad v přeložených bezpečnostních upozorněních, která jsou přiložena k zařízení.

USCHOVEJTE TYTO POKYNY

Προειδοποίηση

ΣΗΜΑΝΤΙΚΕΣ ΟΔΗΓΙΕΣ ΑΣΦΑΛΕΙΑΣ

Αυτό το προειδοποιητικό σύμβολο σημαίνει κίνδυνο. Βρίσκεστε σε κατάσταση που μπορεί να προκαλέσει τραυματισμό. Πριν εργαστείτε σε οποιοδήποτε εξοπλισμό, να έχετε υπόψη σας τους κινδύνους που σχετίζονται με τα ηλεκτρικά κυκλώματα και να έχετε εξοικειωθεί με τις συνήθεις πρακτικές για την αποφυγή ατυχημάτων. Χρησιμοποιήστε τον αριθμό δήλωσης που παρέχεται στο τέλος κάθε προειδοποίησης, για να εντοπίσετε τη μετάφρασή της στις μεταφρασμένες προειδοποιήσεις ασφαλείας που συνοδεύουν τη συσκευή.

ΦΥΛΑΞΤΕ ΑΥΤΕΣ ΤΙΣ ΟΔΗΓΙΕΣ

אזהרה

הוראות בטיחות חשובות

סימן אזהרה זה מסמל סכנה. אתה נמצא במצב העלול לגרום לפציעה. לפני שתעבוד עם ציוד כלשהו, עליך להיות מודע לסכנות הכרוכות במעגלים חשמליים ולהכיר את הנהלים המקובלים למניעת תאונות. השתמש במספר ההוראה המסופק בסופה של כל אזהרה כדי לאתר את התרגום באזהרות הבטיחות המתורגמות שמצורפות להתקן.

שמור הוראות אלה

предупредување

ВАЖНИ БЕЗБЕДНОСНИ НАПАТСТВИЈА

Симболот за предупредување значи опасност. Се наоѓате во ситуација што може да предизвика телесни повреди. Пред да работите со опремата, бидете свесни за ризикот што постои кај електричните кола и треба да ги познавате стандардните постапки за спречување на несреќни случаи. Искористете го бројот на изјавата што се наоѓа на крајот на секое предупредување за да го најдете неговиот период во преведените безбедносни предупредувања што се испорачани со уредот.

ЧУВАЈТЕ ГИ ОВИЕ НАПАТСТВИЈА

Ostrzeżenie

WAŻNE INSTRUKCJE DOTYCZĄCE BEZPIECZEŃSTWA

Ten symbol ostrzeżenia oznacza niebezpieczeństwo. Zachodzi sytuacja, która może powodować obrażenia ciała. Przed przystąpieniem do prac przy urządzeniach należy zapoznać się z zagrożeniami związanymi z układami elektrycznymi oraz ze standardowymi środkami zapobiegania wypadkom. Na końcu każdego ostrzeżenia podano numer, na podstawie którego można odszukać tłumaczenie tego ostrzeżenia w dołączonym do urządzenia dokumencie z tłumaczeniami ostrzeżeń.

NINIEJSZE INSTRUKCJE NALEŻY ZACHOWAĆ

Upozornenie

DÔLEŽITÉ BEZPEČNOSTNÉ POKYNY

Tento varovný symbol označuje nebezpečenstvo. Nachádzate sa v situácii s nebezpečenstvom úrazu. Pred prácou na akomkoľvek vybavení si uvedomte nebezpečenstvo súvisiace s elektrickými obvodmi a oboznámte sa so štandardnými opatreniami na predchádzanie úrazom. Podľa čísla na konci každého upozornenia vyhľadajte jeho preklad v preložených bezpečnostných upozorneniach, ktoré sú priložené k zariadeniu.

USCHOVAJTE SI TENTO NÁVOD

Opozorilo **POMEMBNI VARNOSTNI NAPOTKI**

Ta opozorilni simbol pomeni nevarnost. Nahajate se v situaciji, kjer lahko pride do telesnih poškodb. Preden pričnete z delom na napravi, se morate zavedati nevarnosti udara električnega toka, ter tudi poznati preventivne ukrepe za preprečevanje takšnih nevarnosti. Uporabite obrazložitveno številko na koncu posameznega opozorila, da najdete opis nevarnosti v priloženem varnostnem priročniku.

SHRANITE TE NAPOTKE!

警告 重要安全性指示
此警告符號代表危險，表示可能造成人身傷害。使用任何設備前，請留心電路相關危險，並熟悉避免意外的標準作法。您可以使用每項警告後的聲明編號，查詢本裝置隨附之安全性警告譯文中的翻譯。
請妥善保留此指示

Warning **When installing the product, please use the provided or designated connection cables/power cables/AC adaptors. Using any other cables/adaptors could cause a malfunction or a fire. Electrical Appliance and Material Safety Law prohibits the use of UL-certified cables (that have the "UL" shown on the code) for any other electrical devices than products designated by CISCO. The use of cables that are certified by Electrical Appliance and Material Safety Law (that have "PSE" shown on the code) is not limited to CISCO-designated products.** Statement 371

Warning **Read the wall-mounting instructions carefully before beginning installation. Failure to use the correct hardware or to follow the correct procedures could result in a hazardous situation to people and damage to the system.** Statement 378

Warning **There is the danger of explosion if the battery is replaced incorrectly. Replace the battery only with the same or equivalent type recommended by the manufacturer. Dispose of used batteries according to the manufacturer's instructions**. Statement 1015

Warning **To avoid electric shock, do not connect safety extra-low voltage (SELV) circuits to telephone-network voltage (TNV) circuits. LAN ports contain SELV circuits, and WAN ports contain TNV circuits. Some LAN and WAN ports both use RJ-45 connectors. Use caution when connecting cables.** Statement 1021

Warning **This equipment must be grounded. Never defeat the ground conductor or operate the equipment in the absence of a suitably installed ground conductor. Contact the appropriate electrical inspection authority or an electrician if you are uncertain that suitable grounding is available**. Statement 1024

Warning **If the symbol of suitability with an overlaid cross appears above a port, you must not connect the port to a public network that follows the European Union standards. Connecting the port to this type of public network can cause severe personal injury or can damage the unit.** Statement 1031

Warning **Connect the unit only to DC power source that complies with the safety extra-low voltage (SELV) requirements in IEC 60950 based safety standards.** Statement 1033

Warning **Do not use this product near water; for example, near a bath tub, wash bowl, kitchen sink or laundry tub, in a wet basement, or near a swimming pool.** Statement 1035

Warning **Never install telephone jacks in wet locations unless the jack is specifically designed for wet locations.** Statement 1036

Warning **Never touch uninsulated telephone wires or terminals unless the telephone line has been disconnected at the network interface.** Statement 1037

Warning **Avoid using a telephone (other than a cordless type) during an electrical storm. There may be a remote risk of electric shock from lightning.** Statement 1038

Warning **When installing or replacing the unit, the ground connection must always be made first and disconnected last.** Statement 1046

Warning **Do not locate the antenna near overhead power lines or other electric light or power circuits, or where it can come into contact with such circuits. When installing the antenna, take extreme care not to come into contact with such circuits, because they may cause serious injury or death. For proper installation and grounding of the antenna, please refer to national and local codes (for example, U.S.:NFPA 70, National Electrical Code, Article 810, Canada: Canadian Electrical Code, Section 54).** Statement 1052

Warning **No user-serviceable parts inside. Do not open.** Statement 1073

Warning **Installation of the equipment must comply with local and national electrical codes.** Statement 1074

Warning **Only trained and qualified personnel should be allowed to install, replace, or service this equipment.** Statement 1030

Warning **Read the installation instructions before connecting the system to the power source.** Statement 1004

Warning **Ultimate disposal of this product should be handled according to all national laws and regulations.** Statement 1040

Warning **The covers are an integral part of the safety design of the product. Do not operate the unit without the covers installed.** Statement 1077

Warning **Hot surface.** Statement 1079

Warning **The equipment is suitable for installation in the following locations:**

Network Telecommunications Facilities
Location where the NEC applies
OSP

Related Documentation

- *Regulatory Compliance and Safety Information for Cisco 800 Series Routers*
- *Cisco IOS Software Releases 12.4 Special and Early Deployments*
- *Cisco IOS Quality of Service Solutions Command Reference, Release 12.4T*
- *Cisco IOS Security Configuration Guide, Release 12.4T*
- *Cisco IOS Security Command Reference, Release 12.4T*
- *Cisco CP Express User's Guide*

Searching Cisco Documents

To search an HTML document using a web browser, press **Ctrl-F** (Windows) or **Cmd-F** (Apple). In most browsers, the option to search whole words only, invoke case sensitivity, or search forward and backward is also available.

To search a PDF document in Adobe Reader, use the basic Find toolbar (**Ctrl-F**) or the Full Reader Search window (**Shift-Ctrl-F**). Use the Find toolbar to find words or phrases within a specific document. Use the Full Reader Search window to search multiple PDF files simultaneously and to change case sensitivity and other options. Adobe Reader's online help has more information about how to search PDF documents.

Obtaining Documentation and Submitting a Service Request

For information on obtaining documentation, submitting a service request, and gathering additional information, see the monthly *What's New in Cisco Product Documentation*, which also lists all new and revised Cisco technical documentation, at:

http://www.cisco.com/en/US/docs/general/whatsnew/whatsnew.html

Subscribe to the *What's New in Cisco Product Documentation* as a Really Simple Syndication (RSS) feed and set content to be delivered directly to your desktop using a reader application. The RSS feeds are a free service and Cisco currently supports RSS Version 2.0.

Product Overview

This chapter provides an overview of the features available for the Cisco 812, Cisco 819, Cisco 860, 880, 890 Integrated Services Router (ISR) and contains the following sections:

- Cisco 810 Series, page 1-1
- Cisco 860, 880, 890 Series, page 1-42

Note For compliance and safety information, see *Regulatory Compliance and Safety Information for Cisco 800 Series Routers*.

Cisco 810 Series

This section contains the following:

- Cisco 812 Series, page 1-1
- Cisco 819 Series, page 1-10

Cisco 812 Series

This section provides an overview of the features available for the Cisco 812 Integrated Services Router (ISR) and contains the following sections:

- General Description, page 1-1
- Hardware Features, page 1-4
- SKU Information, page 1-9

Note For compliance and safety information, see *Regulatory Compliance and Safety Information for Cisco 800 Series and SOHO Series Routers*.

General Description

The Cisco 812 ISR is a new router that looks like an Access Point with 3G, WLAN, and routing capabilities.

The 3rd Generation (3G) is a generation of standards for mobile technology that facilitates growth, increased in bandwidth, and supports more diverse applications.

The Cisco 812 ISR can be powered by an (included) external AC adapter or by a PoE+ capable Ethernet source using an optional Cisco PoE splitter C810-POE-SPL.

A Wireless Local Area Network (WLAN) implements a flexible data communication system frequently augmenting rather than replacing a wired LAN within a building or campus. WLANs use radio frequency to transmit and receive data over the air, minimizing the need for wired connections. Figure 1-1 shows the Cisco 812 ISR.

Figure 1-1 Cisco 812 ISR

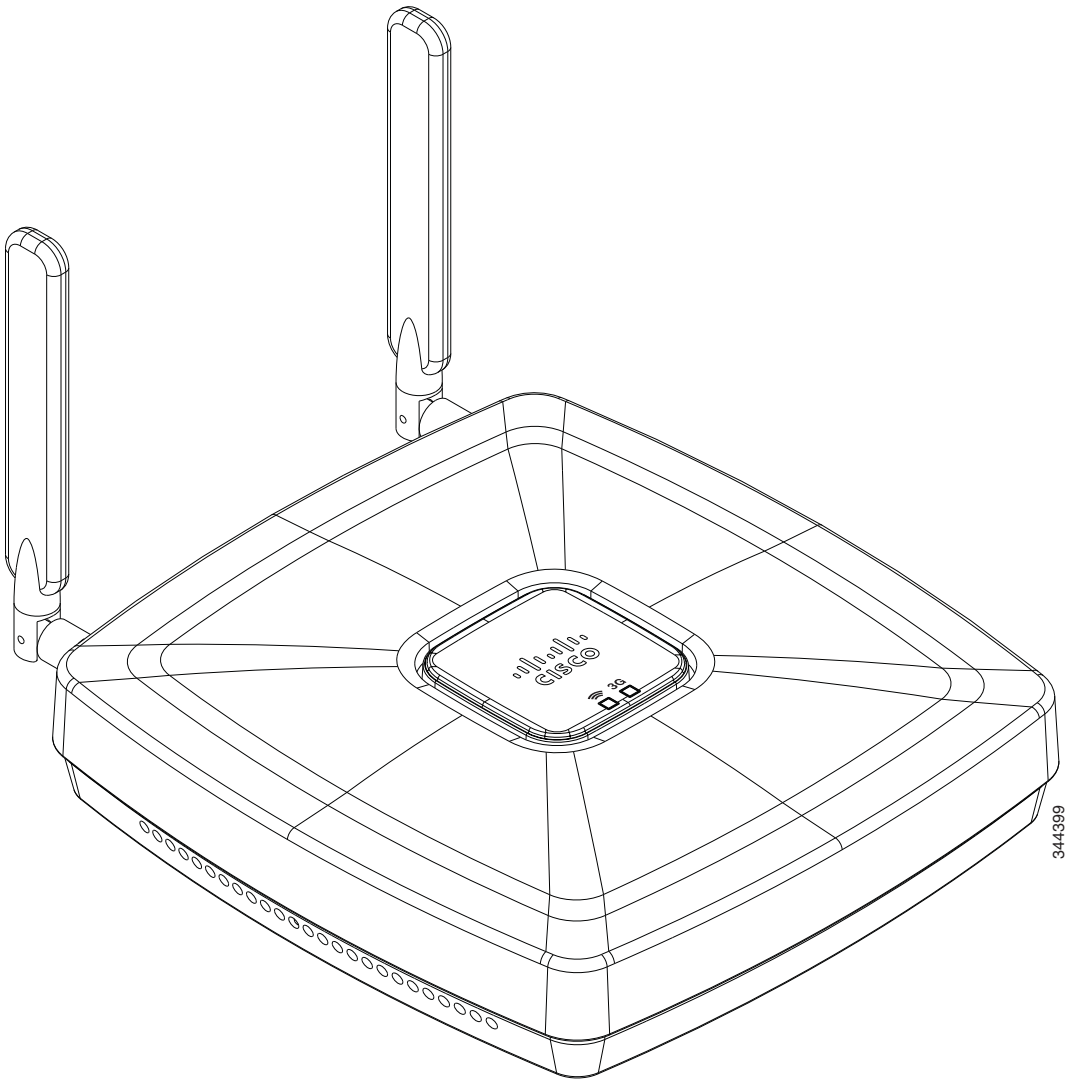

Figure 1-2 shows the 3G antenna and LEDs display.

Figure 1-2 Cisco 812 ISR 3G and LEDs Display

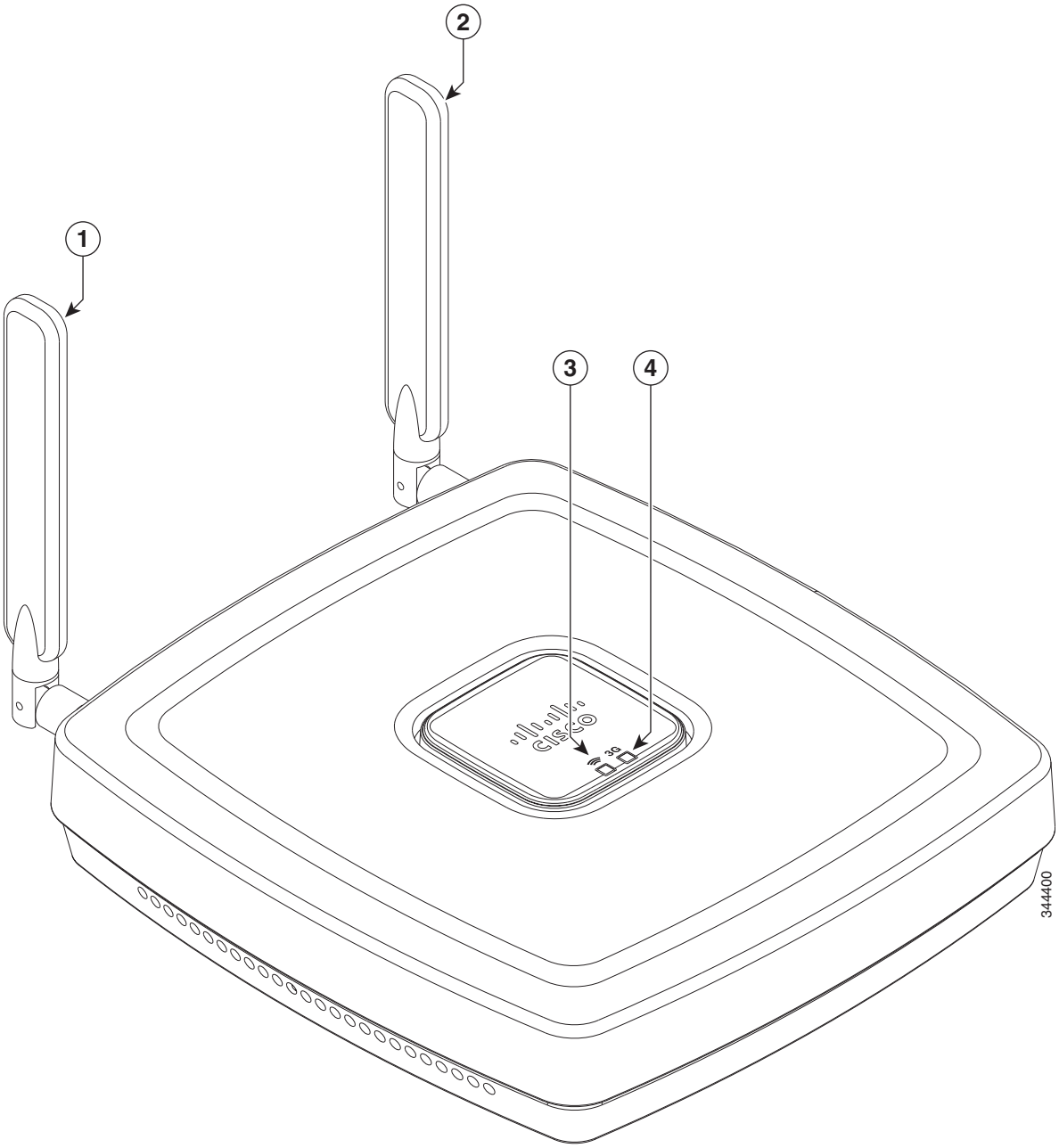

1	3G diversity antenna	**3**	WiFi LED
2	3G main antenna	**4**	3G LED

Figure 1-3 shows the I/O side of the Cisco 812 ISR.

Figure 1-3 Cisco 812 ISR I/O Side

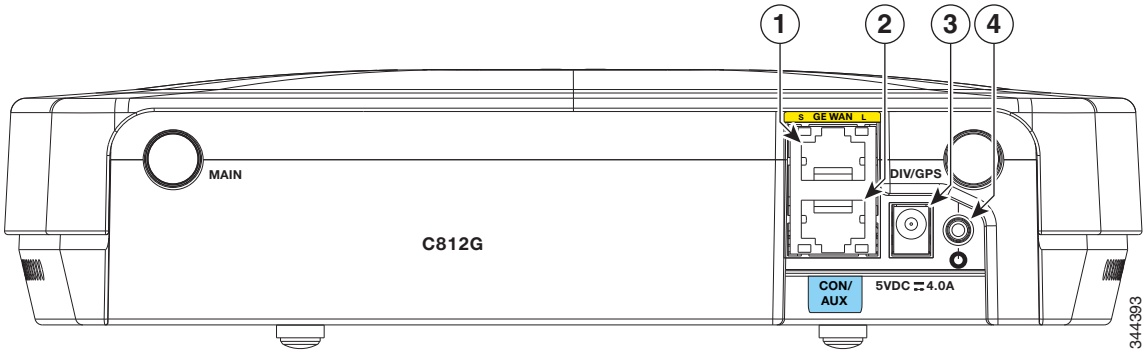

1	GE WAN port	**3**	Power connection port
2	Console/Aux port	**4**	Power switch

Hardware Features

The Cisco 812 ISR supports the following hardware features:

- Platform Features, page 1-4
- Antenna, page 1-5
- LEDs, page 1-5
- Memory, page 1-8
- Power Supply, page 1-8

Note The WAAS Express feature is not supported. This feature will be supported for 3G and 4G interfaces with later IOS releases.

Platform Features

The Cisco 812 ISR has the following platform features:

- 1x GE Enabled WAN (1000/100/10 Base T)
- 2 TNC connectors for 3G main and diversity antenna (diversity antenna multiplexed with GPS)
- 512 MB Compact Flash Memory
- 512 MB DRAM
- AC Power Brick (100–264 V and max 0.5 A)
- Optional PoE+ (802.3at Class 4) Power Splitter
- Built-in Grounding

- Ceiling and Wall Mounting Option
- LED indicators for the platform

Antenna

The Cisco 812 ISR supports 3G external antenna and WiFi embedded antenna.

3G External Antenna

The Cisco 812 ISR provides two standard panel-mount TNC connectors to support 3G. The main antenna is used for the primary 3G antenna. The second can be used as a diversity receive only 3G antenna or an amplified GPS antenna. See Figure 1-2 for the location of the antennas.

WiFi Embedded Antenna

The Cisco 812 ISR supports Dual ports WiFi radios (802.11 a/b/g/n) with embedded 2x3 MIMO.

For compliance and safety information, see the *Regulatory Compliance and Safety Information for the Cisco 800 Series and SOHO Series Routers*.

LEDs

The Cisco 812 ISR has two LEDs located on the top side of the router. The 3G LED is located on the lower right side with respect to the Cisco logo. 3G LED supports multiple functions and colors. The WiFi LED is located on lower left side with respect to the Cisco logo. Table 1-1 describes the 3G LED for the Cisco 812 ISR.

Table 1-1 Cisco 812 3G LED Descriptions

ROMMON Mode		
3G LED	**LED Color**	**Description**
System	Yellow	FPGA download is complete.
	Green (four blinks)	ROMMON is running.
	Off	No power. Incomplete FPGA download.
IOS 3G Mode		
3G Service Type	White	MC8700—2G (GPRS/EDGE) MC5728—1xRTT
	Green	MC8700—3G (UMTS) MC5728—EVDO Rev 0
	Light Blue	MC8700—3.5G (HSPA) MC5728—EVDO Rev A
	Blue	MC8700—3.7G (HSPA+) MC5728—N/A
	Off (solid)	No service.

Table 1-1 Cisco 812 3G LED Descriptions (continued)

ROMMON Mode		
3G LED	**LED Color**	**Description**
RSSI[1]	White, Green, Light Blue, or Blue (solid)	Signal > –60 dBm Very strong signal
	White, Green, Light Blue, or Blue (three blinks and then a long pause)	Signal <= –60 to 74 dBm Strong signal.
	White, Green, Light Blue, or Blue (two blinks and then a long pause)	Signal <= –75 to –89 dBm Fair signal.
	White, Green, Light Blue, or Blue (one blink and then a long pause)	Signal <= –90 to –109 dBm Marginal signal.
	Off	Signal <= –110 dBm Unusable signal.
Fault / Alarm	Amber (solid)	Fault detected.
	Red (four blinks)	Temperature alert.
	Red (solid)	Software failure. Power cycle.

1. The LED colors of RSSI can be any of the four colors (White, Green, Light Blue, or Blue) listed under 3G service type.

Table 1-2 describes the WiFi LED for the Cisco 812 ISR.

Table 1-2 Cisco 812 ISR WiFi LED Descriptions

Message Type	Color	Description
Boot loader status sequence	Blinking Green	DRAM memory test in progress.
		DRAM memory test is OK.
		Board initialization in progress.
		Initializing FLASH file system.
		Initializing Ethernet.
		Ethernet is OK.
		Starting Cisco IOS.
		Initialization successful.
Association status	Green	Normal operating condition with no wireless client associated.
	Blue	Normal operating condition with at least one wireless client associated.
Operating status	Blinking Blue	Software upgrade in progress.
	Rapidly cycling through Blue, Green, Red, and White	Access point location command invoked.
	Blinking Red	Ethernet link not operational.
	Yellow	Router is powered up.
		FPGA download is complete.
	Blinking Green	LED blinks four times when ROMMON is up.
Boot loader warnings	Blinking Blue	Configuration recovery in progress. (MODE button pushed for 2 to 3 seconds)
	Red	Ethernet failure.
	Blinking Green	Image recovery in progress (MODE button released).
Boot loader errors	Red	DRAM memory test failure.
	Blinking Red and Blue	FLASH file system failure.
	Blinking Red and Off	Environment variable failure.
		Bad MAC address.
		Ethernet failure during image recovery.
		Boot environment failure.
		No Cisco image file.
		Boot failure.

Table 1-2 Cisco 812 ISR WiFi LED Descriptions (continued)

Message Type	Color	Description
Cisco IOS errors	Red	Software failure. Try to disconnect and reconnect the unit power.
	Cycling through Blue, Green, Red, and Off	General warning.

Memory

The Cisco 812 ISR supports 512 MB DRAM and 512 MB compact flash memory. The Host router software runs on the first core. The second core runs the WLAN Access Point software.

If WLAN is not supported in an SKU, all 512 MB DRAM memory is allocated to the first core. For the SKUs that support WLAN, 128 MB out of the 512 MB main memory is allocated to the second core.

If WLAN is not supported in an SKU, all 512 MB DRAM compact flash memory is allocated to the first core. For the SKUs that support WLAN, 64 MB out of the 512 MB main memory is allocated to the second core.

Power Supply

The following are power adapters supported in the Cisco 812 ISR:

- AC Power Adapter, page 1-8
- PoE+ Splitter, page 1-8

AC Power Adapter

The default configuration is AC adapter that supports up to 4 A of 5 VDC current. The supported AC power adapter is PWR2-20W-AC that has a nominal input voltage of 100 to 240 VAC.

PoE+ Splitter

The Cisco PoE+ splitter (C810-POE-SPL) splits PoE+ into power and GE. It has connectors built into the power supply at both input and output so cables can be used at desired length as an option. Figure 1-4 shows the I/O side of the PoE+ splitter.

Figure 1-4 PoE+ Splitter I/O Side

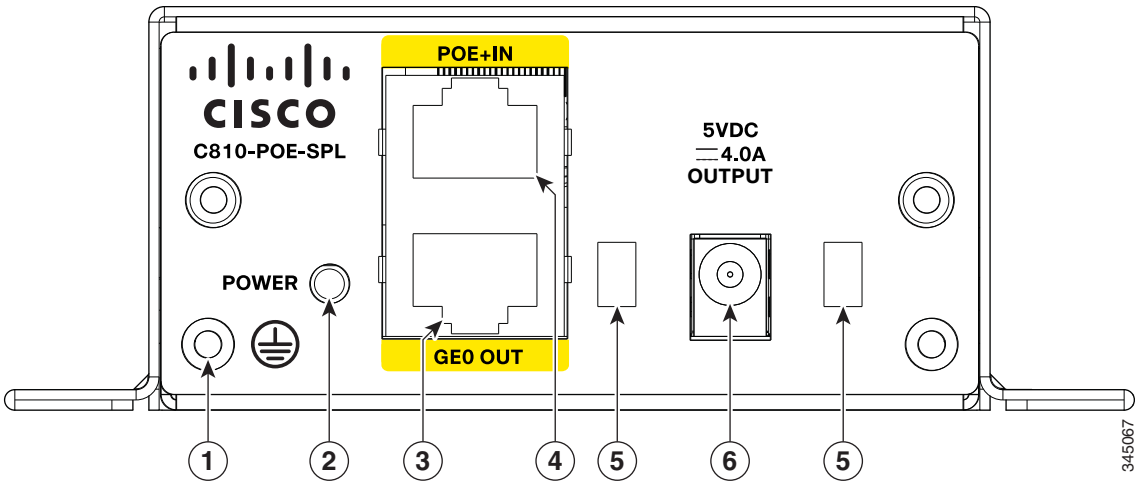

1	Grounding location	**4**	PoE+ input
2	Power status LED	**5**	Openings for power cord latch to lock into enclosure
3	GE0 output	**6**	Input power connection

SKU Information

Table 1-3 lists the different SKUs available for the Cisco 812 ISR. The AP802-AGN-X-K9 (WLAN PID) is integrated as part of the router for the SKUs that support WLAN and is not orderable separately.

Table 1-3 Supported SKUs

SKU ID	WLAN PID	Description
C812G+7-K9	—	C812 Secure Router Standalone Unit (non-US) 3.7G HSPA + Release 7 with SMS/GPS WLAN is not supported.
C812G-CIFI+7-E-K9	AP802-AGN-E-K9	C812 Secure Router (non-US) 3.7G HSPA + Release 7 with SMS/GPS and Dual WiFi Radio with ETSI
C812G-CIFI+7-N-K9	AP802-AGN-N-K9	C812 Secure Router (non-US) 3.7G HSPA + Release 7 with SMS/GPS and Dual WiFi Radio with ANZ
C812G-CIFI-V-A-K9	AP802-AGN-A-K9	C812 Secure Router for Verizon EV-DO Rev A with SMS/GPS and Dual WiFi Radio with FCC
C812G-CIFI-S-A-K9	AP802-AGN-A-K9	C812 Secure Router for Sprint EV-DO Rev A with SMS/GPS and Dual WiFi Radio with FCC

Cisco 819 Series

This section provides an overview of the features available for the Cisco 819 and Cisco 819H Integrated Services Routers (ISRs) and contains the following sections:

- General Description, page 1-10
- SKU Information, page 1-14
- Hardware Features, page 1-27

Note Cisco 819 is used to refer to Cisco 819HG, Cisco 819G, Cisco 819H, Cisco 819GW, Cisco 819HGW, Cisco 819HWD, Cisco 819HG-4G, and Cisco 819G-4G ISRs unless specifically called out otherwise.

Note This product is a Class 1 Outside Plant (OSP) as per Telcordia GR-3108.

Note For compliance and safety information, see *Regulatory Compliance and Safety Information Roadmap* that ships with the router and *Regulatory Compliance and Safety Information for Cisco 800 Series and SOHO Series Routers.*

General Description

The Cisco 819 Integrated Services Router, part of the Cisco Integrated Services Routers Generation 2 (ISR G2) Family designed in compact hardened and non-hardened form factors, is the smallest Cisco IOS Software router with support for integrated fourth-generation (4G LTE) and third-generation (3G) wireless WAN (mobile broadband backhaul). The Cisco 819GW now supports Dual 802.11 a/b/g/n radios WiFi. The Cisco 819 ISR machine-to-machine gateway provides a rapidly deployable, highly available, reliable, and secure solution into machine-to-machine applications for financial, telemetry, utility, retail, industrial automation, and transportation with comprehensive management capability. Transparently integrated into Cisco IOS Software as an enterprise-class feature, the Cisco 819 Hardened ISR provides highly secure data, voice, and video communications to stationary and mobile network nodes across wired and wireless links.

Available in both non-hardened (Cisco 819G) and hardened (Cisco 819HG) versions, the Cisco 819 supporting 4G LTE and 3G wireless WAN (WWAN) speeds offers a cost-effective, rapidly deployable, reliable, and secure primary or backup solution. With support for industrial-grade components, the hardened Cisco 819HG extends the ISR machine-to-machine gateway footprint and provides the flexibility for deployment in many different stationary and mobile environments where space, heat dissipation, exposure to extreme temperatures, harsher environments, and low power consumption are critical factors. For mobile applications, Mobile IP delivers transparent roaming across multiple wireless networks capable of covering wide geographic areas.

The Cisco 819 ISR is a standard form factor with a commercial operating range. The 3G Cisco 819 ISRs support the 3G speeds (High-Speed PacketAccess Plus [HSPA+] enabling up to 4G speeds and Evolution Data Optimized [EVDO Rev A]). They are backward-compatible with High-Speed Packet Access (HSPA), Universal Mobile Telecommunications Service (UMTS), Enhanced Data Rates for Global Evolution (EDGE), General Packet Radio Service (GPRS), and EVDO Rev 0/1xRTT.

The 4G LTE C819 supports the latest Third-Generation Partnership Project (3GPP) Release 8 LTE standards. The Cisco 4G multimode LTE WWAN C819 provides persistent and reliable LTE connectivity with fallback and transparent handoff to earlier technologies. The Cisco 819HG-4G and Cisco 819G-4G support multimode 4G LTE and have embedded Sierra Wireless multimode modem.

The Cisco 819 ISR is a desktop form factor with built-in wall-mount features, floor mount, and DIN rail mount features in selected SKUs. These routers are powered by an external AC power or optional DC adapter. Figure 1-5 shows the Cisco 819HG ISR.

The Cisco 819GW ISRs support WiFi radios with a higher memory density and a new barrel-type power connector. A Wireless Local Area Network (WLAN) implements a flexible data communication system frequently augmenting rather than replacing a wired LAN within a building or campus. WLANs use radio frequency to transmit and receive data over the air, minimizing the need for wired connections. Figure 1-6 shows the Cisco 819HGW ISR.

The Cisco 819GW ISRs have the following additional features:

- Dual 802.11 a/b/g/n radios
- External WiFi antenna
- WLAN LED

Figure 1-5 Cisco 819HG Integrated Services Router

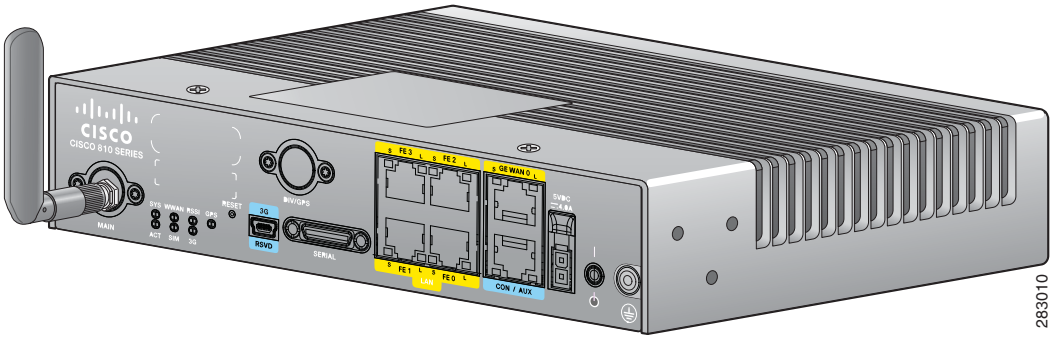

Figure 1-6 *Cisco 819HGW Integrated Services Router*

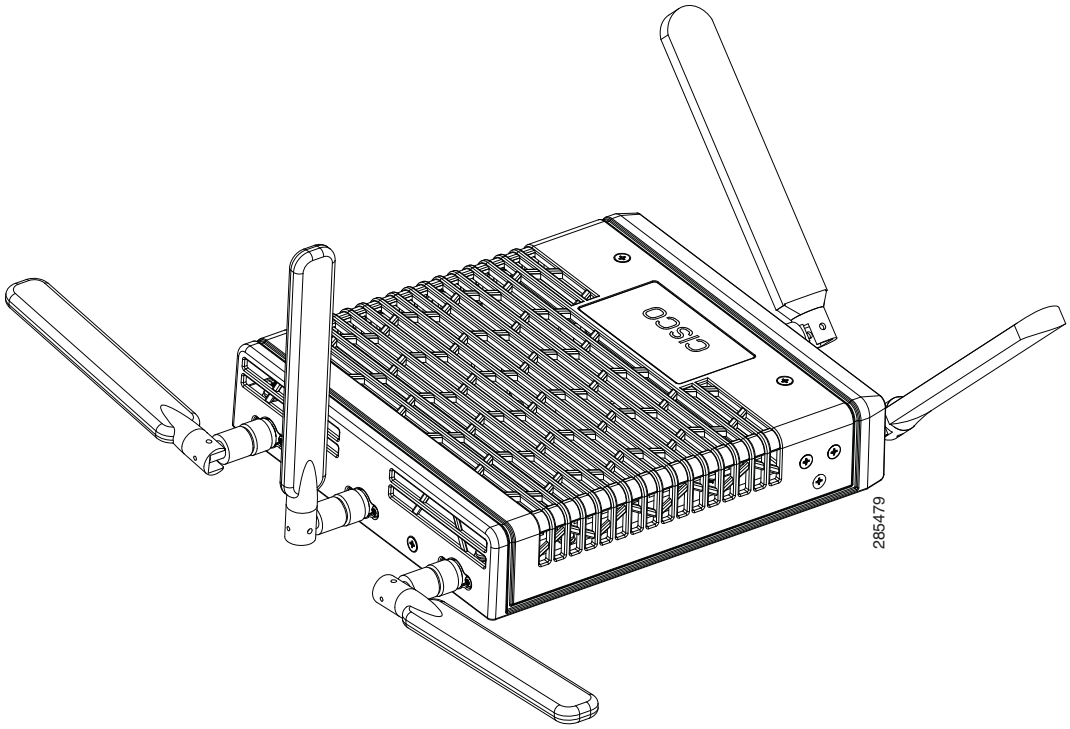

Figure 1-7 shows the front panel details of the Cisco 819HG ISR.

Figure 1-7 Cisco 819HG ISR Front Panel

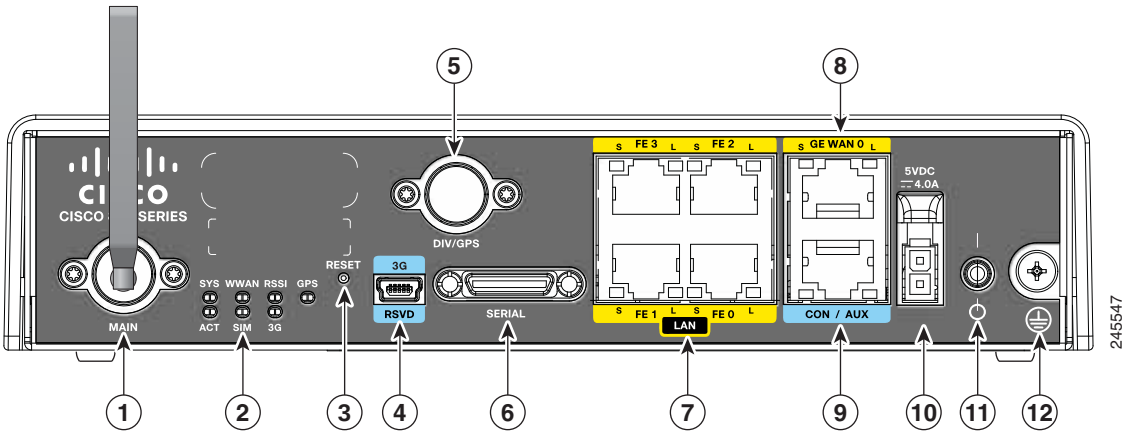

1	3G main antenna	**7**	FE ports
2	LEDs	**8**	GE WAN port
3	Reset button	**9**	Console/Aux port

4	3G mini-USB diagnostic port	**10**	5 VDC molex power input
5	Diversity/GPS antenna	**11**	Power switch
6	12-in-1 serial port	**12**	Ground

Figure 1-8 shows the front panel details of the Cisco 819HGW ISR.

Figure 1-8 Cisco 819HGW ISR Front Panel

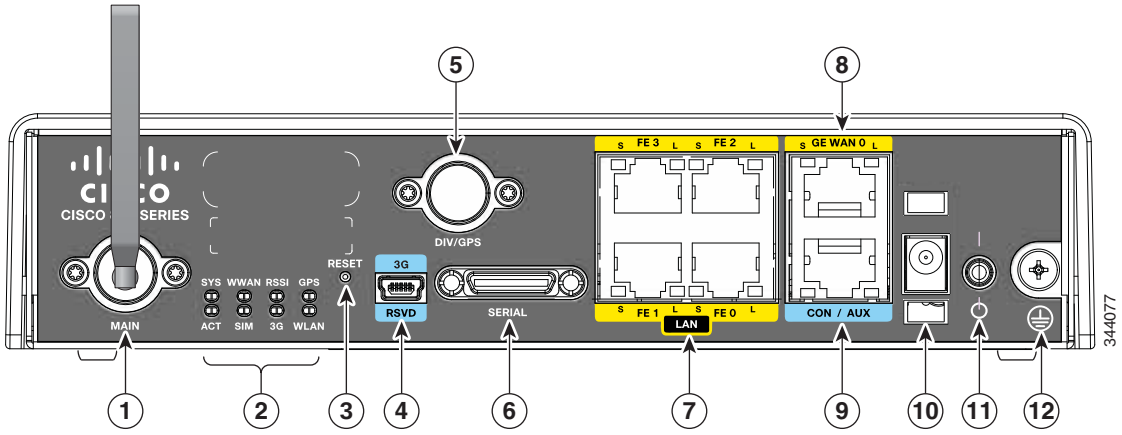

1	3G main antenna	**7**	FE ports
2	LEDs	**8**	GE WAN port
3	Reset button	**9**	Console/Aux port
4	3G mini-USB diagnostic port	**10**	5 VDC barrel-type power input
5	Diversity/GPS antenna	**11**	Power switch
6	12-in-1 serial port	**12**	Ground

Figure 1-9 shows the front panel details of the Cisco 819 4G LTE ISR.

Figure 1-9 Cisco 819 4G LTE ISR Front Panel

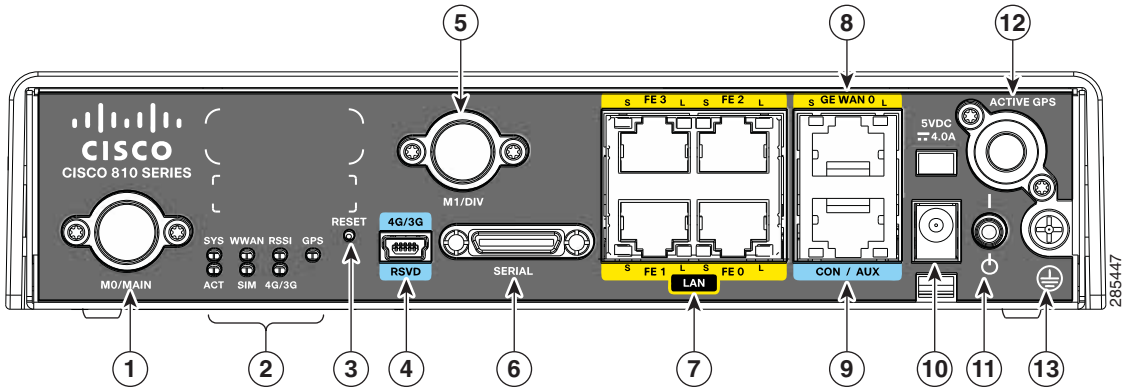

1	4G antenna connector—M0/MAIN	**8**	GE WAN port
2	LEDs	**9**	Console/Aux port
3	Reset button	**10**	Power input
4	4G/3G port	**11**	Power switch
5	4G antenna connector—M1/DIV	**12**	Active GPS antenna connector
6	Serial port	**13**	Ground
7	FE ports		

SKU Information

Table 1-4 lists the different 3G SKUs available for the Cisco 819HG and Cisco 819G ISRs. All SKUs support external antenna.

Note WLAN is not supported.

Table 1-4 Supported 3G SKUs for Cisco 819HG and Cisco 819G ISRs

SKU ID	Description
C819HG+7-K9	Compact Hardened 3G IOS Router with Global HSPA + Release 7 based on MC8705
C819HG-U-K9	Compact Hardened 3G IOS Router with GLOBAL HSPA Release 6 based on MC8795V
C819HG-V-K9	Compact Hardened 3G IOS Router with Verizon EVDO Rev A based on MC5728V
C819HG-S-K9	Compact Hardened 3G IOS Router with Sprint EVDO Rev A based on MC5728V

Table 1-4 Supported 3G SKUs for Cisco 819HG and Cisco 819G ISRs (continued)

SKU ID	Description
C819HG-B-K9	Compact Hardened 3G IOS Router with Bharat generic EVDO Rev A based on MC5728V
C819G+7-K9	Compact Non-hardened 3G IOS Router with Global HSPA + Release 7 based on MC8705
C819G-U-K9	Compact Non-hardened 3G IOS Router with GLOBAL HSPA Release 6 based on MC8795V
C819G-V-K9	Compact Non-hardened 3G IOS Router with Verizon EVDO Rev A based on MC5728V
C819G-S-K9	Compact Non-hardened 3G IOS Router with Sprint EVDO Rev A based on MC5728V
C819G-B-K9	Compact Non-hardened 3G IOS Router with Bharat generic EVDO Rev A based on MC5728V

Table 1-5 lists the different SKUs available for the Cisco 819HGW, Cisco 819H, and Cisco 819HWD ISRs.

Table 1-5 Supported SKUs for Cisco 819HGW, Cisco 819H, and Cisco 819HWD ISRs

SKU ID	WLAN ID	WiFi External Antenna Support	Description
C819HGW+7-E-K9	AP802H-AGN-E-K9	Yes	Cisco 819 Secure Hardened M2M GW (non-US) 3.7G HSPA + Release 7 with SMS/GPS and Dual WiFi Radio with ETSI
C819HGW+7-N-K9	AP802H-AGN-N-K9	Yes	Cisco 819 Secure Hardened M2M GW (non-US) 3.7G HSPA + Release 7 with SMS/GPS and Dual WiFi Radio with ANZ
C819HGW+7-A-A-K9	AP802H-AGN-A-K9	Yes	Cisco 819 Secure Hardened M2M GW (North America) 3.7G HSPA + Release 7 with SMS/GPS and Dual WiFi Radio with FCC for ATT
C819HGW-V-A-K9	AP802H-AGN-A-K9	Yes	Cisco 819 Secure Hardened Router for Verizon EV-DO Rev A with SMS/GPS and Dual WiFi Radio with FCC
C819HGW-S-A-K9	AP802H-AGN-A-K9	Yes	Cisco 819 Secure Hardened Router for Sprint EV-DO Rev A with SMS/GPS and Dual WiFi Radio with FCC
C819H-K9	—	—	Cisco 819 Secure Hardened Router with Serial WLAN and 3G are not supported
C819HWD-E-K9	AP802H-AGN-E-K9	Yes	Cisco 819 Secure Hardened Router and Dual WiFi Radio with ETSI 3G is not supported
C819HWD-A-K9	AP802H-AGN-A-K9	Yes	Cisco 819 Secure Hardened Router and Dual WiFi Radio with FCC 3G is not supported

Table 1-6 lists the different 4G LTE SKUs available for the Cisco 819HG and Cisco 819G ISRs.

Table 1-6 Supported 4G LTE SKUs for Cisco 819HG-4G and Cisco 819G-4G ISRs

SKU ID	Mode	Operating Regions	Frequency Band	Description
C819HG-4G-V-K9	LTE—DOrA	North America	700 MHz (band 13) or LTE 800/1900 MHz for CDMA 1xRTT, 1xEVDO Rev A	Compact Hardened Cisco 819 router with multi mode LTE feature dedicated to Verizon Wireless networks. This comes with a Sierra Wireless MC7750 modem.
C819G-4G-V-K9	LTE—DOrA	North America	700 MHz (band 13) for LTE 800/1900 MHz for CDMA 1xRTT, 1xEVDO Rev A	Compact Non-hardened Cisco 819 router with multi mode LTE feature dedicated to Verizon Wireless networks. This comes with a Sierra Wireless MC7750 modem.
C819HG-4G-A-K9	LTE—HSPA+/ HSPA/UMTS/ EDGE/GPRS	North America	700 MHz (band 17)/AWS (band 4)/2100MHz (band 1) for LTE 800/850/1900/2100 MHz for UMTS/ HSPA+/HSPA 850/900/1800/1900 MHz for GSM/EDGE/GPRS	Compact Hardened Cisco 819 router with multi mode LTE feature dedicated to AT&T Wireless networks. This comes with a Sierra Wireless MC7700 modem.
C819G-4G-A-K9	LTE—HSPA+/ HSPA/UMTS/ EDGE/GPRS	North America	700 MHz(band 17)/AWS(band 4)/2100MHz(band 1) for LTE 800/850/1900/2100 MHz for UMTS/ HSPA+/HSPA 850/900/1800/1900 MHz for GSM/EDGE/GPRS	Compact Non-hardened Cisco 819 router with multi mode LTE feature dedicated to AT&T Wireless networks. This comes with a Sierra Wireless MC7700 modem.
C819HG-4G-G-K9	LTE—HSPA+/ HSPA/UMTS/ EDGE/GPRS	Global	800 MHz (band 20)/900 MHz (band 8)/1800 MHz (band 3)/2100 MHz (band 1)/2600 MHz (band 7) for LTE 900/2100 MHz for UMTS/ HSPA+/HSPA 900/1800/1900 MHz for GSM/EDGE/GPRS	Hardened Cisco 819 router with multi-mode LTE feature for global wireless networks. This comes with a Sierra Wireless MC7710 modem.

Table 1-6 Supported 4G LTE SKUs for Cisco 819HG-4G and Cisco 819G-4G ISRs (continued)

SKU ID	Mode	Operating Regions	Frequency Band	Description
C819G-4G-GA-K9	LTE—HSPA+/ HSPA/UMTS/ EDGE/GPRS	Global (Europe, Australia and New Zealand)	LTE—800 MHz (band 20)/900 MHz (band 8)/1800 MHz (band 3)/2100 MHz (band 1)/2600 MHz (band 7) 3G—800 MHz (band 6)/850 MHz (band 5)/900 MHz (band 8) /1900 MHz (band 2) 2100 MHz (band 1) for UMTS/ HSPA+/HSPA 2G—850/900/1800/1900 MHz for GSM/EDGE/GPRS	Non-hardened Cisco 819 router with multi-mode LTE feature for global wireless networks. This comes with a Sierra Wireless MC7304 modem.
C819G-4G-NA-K9	• LTE • HSPA+ • HSPA • UMTS • EDGE • GPRS	North America (AT&T, Bell-Canada, Roger, Telus, and other GSM/LTE operators in USA and Canada)	LTE: • AWS (band 4) • 700 MHz (band 5) • 850 MHz (band 17) • 1900 MHz (band 2) • 2600 MHz (band 7) UMTS, HSPA+, HSPA: • 1900 MHz (band 2) • AWS (band 4) • 850 (band 5) GSM, EDGE, GPRS: • 850 MHz • 900 MHz • 1800 MHz • 1900 MHz	Non-hardened Cisco 819 router with multi-mode LTE feature for AT & T wireless networks. This comes with a Sierra Wireless MC7354 modem

Table 1-6 Supported 4G LTE SKUs for Cisco 819HG-4G and Cisco 819G-4G ISRs (continued)

SKU ID	Mode	Operating Regions	Frequency Band	Description
C819G-4G-ST-K9	• LTE • EVDO Rev-A • 1xRTT	North America (Sprint)	LTE: • AWS (band 4) • 700 MHz (band 13) • PCS 1900 MHz (band 25) 3G: • 800 MHz (band class 0) • 1900 MHz (band class 1) • 800 MHz (band class 10) 2G: • 800 MHz (band class 0) • 1900 MHz (band class 1) • 800 MHz (band class 10)	Non-hardened Cisco 819 router with multi-mode LTE feature for Sprint wireless networks. This comes with a Sierra Wireless MC7350 modem.
C819G-4G-VZ-K9	• LTE • EVDO Rev-A • 1xRTT	North America (Verizon)	LTE: • AWS (band 4) • 700 MHz (band 13) • PCS 1900 MHz (band 25) 3G: • 800 MHz (band class 0) • 1900 MHz (band class 1) • 800 MHz (band class 10) 2G: • 800 MHz (band class 0) • 1900 MHz (band class 1) • 800 MHz (band class 10)	Non-hardened Cisco 819 router with multi-mode LTE feature for Verizon wireless networks. This comes with a Sierra Wireless MC7350 modem.

Table 1-6 Supported 4G LTE SKUs for Cisco 819HG-4G and Cisco 819G-4G ISRs (continued)

SKU ID	Mode	Operating Regions	Frequency Band	Description
C819GW-LTE-MNA-AK9	• LTE • HSPA+ • EVDO Revision A (DOrA) • CDMA • EDGE/GPRS/GSM	North America	For LTE: • 700 MHz (Band 13) • 700 MHz (Band 17) • 800 MHz (Band 5) • 1900 MHz (Band 2) • 1900 MHz (Band 25) • AWS 1700/2100 MHz (Band 4) For HSPA+: • 850 MHz (Band 5) • 900 MHz (Band 8) • 1900 MHz (Band 2) • 2100 MHz (Band 1) • AWS 1700/2100 MHz (Band 4) For CDMA and EVDO Revision A: • 800 MHz (Band Class 0) • 1900 MHz (Band Class 1) • 800 MHz (Band Class 10) For EDGE/GPRS/GSM: • 850 MHz • 900 MHz • 1800 MHz • 1900 MHz	C819GW-LTE-MNA-AK9 is a dedicated Multimode LTE SKU for North American wireless networks and comes with a Sierra Wireless MC7354MNA modem. C819GW-LTE-MNA-AK9 is a non-hardened Cisco 819 Series Router. For 3GPP compliance, the extended temperature range for this SKU is -15 to 50C. For non-3GPP compliance, it is -15 to 55C. Dual SIMs in this SKU provide high reliability and cellular multihoming support for LTE and HSPA-based networks using the common FW technology within the same region. Dual SIMs in the North American SKUs provide switchover with different FW technology. **Note** This is a 4G+ WiFi SKU. This SKU supports all North American carriers like Verizon, ATT, Sprint, and Canada using MC7354MNA modems.

Table 1-6 Supported 4G LTE SKUs for Cisco 819HG-4G and Cisco 819G-4G ISRs (continued)

SKU ID	Mode	Operating Regions	Frequency Band	Description
C819G-LTE-MNA-K9	• LTE • HSPA+ • EDGE/GPRS/GSM • CDMA • EVDO	Global (Europe and Australia)	LTE: • 850MHz(band 19) • 1500MHz(band 21) • 2100MHz(band 1) 3G(UMTS,HSPA+,HSPA): • 800MHz(band 6) • 850MHz(band 5) • 850MHz(band 19) • 2100MHz(band 1) 2G(GSM,EDGE,GPRS): • 850MHz • 900MHz • 1800MHz • 1900MHz	C819G-LTE-MNA-K9 is a dedicated Multimode LTE SKU for global wireless network and comes with a Sierra Wireless MC7354-MNA modem. C819G-LTE-MNA-K9 is a non-hardened Cisco 819 Series Router. For 3GPP compliance, the extended temperature range for this SKU is -15 to 50C. For non-3GPP compliance, it is -15 to 55C. Dual SIMs in this SKU provide high reliability and cellular multihoming support for LTE and HSPA-based networks using the common FW technology within the same region. Dual SIMs provide switchover with different FW technology. **Note** This SKU does not have a WiFi module.

Table 1-6 Supported 4G LTE SKUs for Cisco 819HG-4G and Cisco 819G-4G ISRs (continued)

SKU ID	Mode	Operating Regions	Frequency Band	Description
C819HG-LTE-MNA-K9	• LTE • HSPA+ • EDGE/GPRS/GSM • CDMA • EVDO	North America	LTE: • AWS (band 4) • 850MHz(band 19) • 1500MHz(band 21) • 2100MHz(band 1) 3G(UMTS,HSPA+,HSPA): • 800MHz(band 6) • 850MHz(band 5) • 850MHz(band 19) • 2100MHz(band 1) 2G(GSM,EDGE,GPRS): • 850MHz • 900MHz • 1800MHz • 1900MHz	C819HG-LTE-MNA-K9 is a dedicated Multimode LTE SKU for North American wireless networks and comes with a Sierra Wireless MC7354-MNA modem. C819G-LTE-MNA-K9 is a hardened Cisco 819 Series Router. For 3GPP compliance, the extended temperature range for this SKU is -15 to 50C. For non-3GPP compliance, it is -15 to 55C. Dual SIMs in this SKU provide high reliability and cellular multihoming support for LTE and HSPA-based networks using the common FW technology within the same region. Dual SIMs provide switchover with different FW technology. **Note** This SKU does not have a WiFi module.

Table 1-6 Supported 4G LTE SKUs for Cisco 819HG-4G and Cisco 819G-4G ISRs (continued)

SKU ID	Mode	Operating Regions	Frequency Band	Description
C819G-LTE-LA-K9	• LTE • HSPA+ • HSPA • UMTS	Latin America/APAC	For FDD LTE: • 700 MHz (band 28) • 850 MHz (band 5) • 800 MHz (band 19) • 800 MHz (band 18) • 900 MHz (band 8) • 1800 MHz (band 3) • 2100 MHz (band 1) • 2600 MHz (band 7) For TDD LTE: • 1900 MHz (Band 39) • 2300 MHz (Band 40) • 2500 MHz (Band 41) • 2600 MHz (Band 38) For UMTS, HSPA+, HSPA: • 800 MHz (band 6) • 800 MHz (band 19) • 850 MHz (band 5) • 900 MHz (band 8) • 1700 MHz (band 9) • 2100 MHz (band 1)	C819G-LTE-LA-K9 is a dedicated Multimode LTE SKU for Latin American wireless networks and comes with a Sierra Wireless MC7430 modem.

Table 1-6 Supported 4G LTE SKUs for Cisco 819HG-4G and Cisco 819G-4G ISRs (continued)

SKU ID	Mode	Operating Regions	Frequency Band	Description
C819GW-LTE-LA-CK9	• LTE • HSPA+ • HSPA • UMTS	Latin America/APAC	For FDD LTE: • 700 MHz (band 28) • 850 MHz (band 5) • 800 MHz (band 19) • 800 MHz (band 18) • 900 MHz (band 8) • 1800 MHz (band 3) • 2100 MHz (band 1) • 2600 MHz (band 7) For TDD LTE: • 1900 MHz (Band 39) • 2300 MHz (Band 40) • 2500 MHz (Band 41) • 2600 MHz (Band 38) For UMTS, HSPA+, HSPA: • 800 MHz (band 6) • 800 MHz (band 19) • 850 MHz (band 5) • 900 MHz (band 8) • 1700 MHz (band 9) • 2100 MHz (band 1)	C819G-LTE-LA-CK9 is a dedicated Multimode LTE SKU for Latin American/ APAC wireless networks and comes with a Sierra Wireless MC7430 modem. C819GW-LTE-LA-CK9 comes with WiFi-C 802.11n dual radio.

Table 1-6 Supported 4G LTE SKUs for Cisco 819HG-4G and Cisco 819G-4G ISRs (continued)

SKU ID	Mode	Operating Regions	Frequency Band	Description
C819GW-LTE-LA-QK9	• LTE • HSPA+ • HSPA • UMTS	Latin America/APAC	For FDD LTE: • 700 MHz (band 28) • 850 MHz (band 5) • 800 MHz (band 19) • 800 MHz (band 18) • 900 MHz (band 8) • 1800 MHz (band 3) • 2100 MHz (band 1) • 2600 MHz (band 7) For TDD LTE: • 1900 MHz (Band 39) • 2300 MHz (Band 40) • 2500 MHz (Band 41) • 2600 MHz (Band 38) For UMTS, HSPA+, HSPA: • 800 MHz (band 6) • 800 MHz (band 19) • 850 MHz (band 5) • 900 MHz (band 8) • 1700 MHz (band 9) • 2100 MHz (band 1)	C819GW-LTE-LA-QK9 is a dedicated Multimode LTE SKU for Latin American / APAC wireless networks and comes with a Sierra Wireless MC7430 modem. C819GW-LTE-LA-QK9 comes with WiFi-Q 802.11n dual radio.

Table 1-6 Supported 4G LTE SKUs for Cisco 819HG-4G and Cisco 819G-4G ISRs (continued)

SKU ID	Mode	Operating Regions	Frequency Band	Description
C819GW-LTE-LA-NK9	• LTE • HSPA+ • HSPA • UMTS	Latin America / APAC	For FDD LTE: • 700 MHz (band 28) • 850 MHz (band 5) • 800 MHz (band 19) • 800 MHz (band 18) • 900 MHz (band 8) • 1800 MHz (band 3) • 2100 MHz (band 1) • 2600 MHz (band 7) For TDD LTE: • 1900 MHz (Band 39) • 2300 MHz (Band 40) • 2500 MHz (Band 41) • 2600 MHz (Band 38) For UMTS, HSPA+, HSPA: • 800 MHz (band 6) • 800 MHz (band 19) • 850 MHz (band 5) • 900 MHz (band 8) • 1700 MHz (band 9) • 2100 MHz (band 1)	C819GW-LTE-LA-NK9 is a dedicated Multimode LTE SKU for Latin American / APAC wireless networks and comes with a Sierra Wireless MC7430 modem. C819GW-LTE-LA-NK9 comes with WiFi-N 802.11n dual radio.

Re-branding of C8xx-B and EHWIC-3G-EVDO-B

The C881G-B-K9, C819G-B-K9, and EHWIC-EVDO-B (Bharat) SKUs are introduced as an umbrella SKU to cover BSNL, Tata, and Reliance service providers in India.

Software based mechanism is introduced to identify specific carrier.

Carrier ID and name are displayed under "*show cellular <unit> hardware*".

The software mechanism is backward compatible with other existing CDMA SKUs such as HWIC-3G-CDMA(-S,-V) and PCEX-3G-CDMA(-S,-V).

Cisco IOS Requirement

15.3(2)T, 15.3(3)M or later. New MIB objects for carrier ID and name will be introduced in later release.

Sample CLI Output

```
Router#show cellular 0/0/0 hardware
Modem Firmware Version = p2813301
Modem Firmware built = 06-24-10
Hardware Version = MC5728V Rev 1.0
```

```
Electronic Serial Number (ESN) = 0x60E62C87 [09615084679] Preferred Roaming List (PRL)
Version = 10 PRI SKU ID = 535479 Carrier ID = 19 Carrier Name = Reliance Current Modem
Temperature = 30 degrees Celsius Endpoint Port Map = 75
Router#


Router#show cellular 0/1/0 hardware
Modem Firmware Version = p2813301
Modem Firmware built = 06-24-10
Hardware Version = MC5728V Rev 1.0
Electronic Serial Number (ESN) = 0x60E62431 [09615082545] Preferred Roaming List (PRL)
Version = 10 PRI SKU ID = 535479 Carrier ID = 29 Carrier Name = Tata Current Modem
Temperature = 30 degrees Celsius Endpoint Port Map = 75
Router#
```

Hardware Features

This section provides an overview of the following hardware features for the Cisco 819 ISR.

- Platform Features for Cisco 819 ISRs, page 1-27
- Antennas, page 1-29
- Power Switch, page 1-29
- Reset Button, page 1-30
- LEDs, page 1-30
- Memory, page 1-34
- Embedded 3G Modem, page 1-34
- Embedded 4G LTE Modem, page 1-34
- SIM Card, page 1-34
- Supported Cisco Antennas and Cables, page 1-35
- Serial Port, page 1-40
- Power Supply, page 1-41
- Accessories, page 1-42

Note The WAAS Express feature is not supported. This feature will be supported for 3G and 4G interfaces with later IOS releases.

Platform Features for Cisco 819 ISRs

Table 1-7 lists the platform features comparison for the Cisco 819 ISRs.

Table 1-7 Cisco 819 ISRs Platform Features

Platform Features	Cisco 819HG Cisco 819G (with 3G)	Cisco 819HGW Cisco 819HWD (with 3G and WiFi)	Cisco 819HG-4G Cisco 819G-4G (with 4G LTE)	Cisco 819GW (with 4G LTE and WiFi)
512 MB DRAM	Yes	—	—	—
1 GB DRAM	—	Yes	Yes	Yes
1 Gigabit Ethernet WAN port	Yes	Yes	Yes	Yes
12-in-1 serial interface	Yes	Yes	Yes	Yes
256 KB of NVRAM storage	Yes	Yes	Yes	Yes
256 Compact Flash support in IDE mode (internal)	Yes	—	—	—
1 GB Compact Flash support in IDE mode (internal)	—	Yes	Yes	Yes
Cisco EnergyWise	Yes	Yes	—	Yes
Dual 802.11 a/b/g/n Radios with Cisco DFS, CleanAir, and Client Link support	—	Yes	—	Yes
Embedded 3G modem	Yes	Yes	—	—
Embedded 4G LTE modem	—	—	Yes	Yes
Environmental monitoring and temperature logging	Yes	Yes	—	Yes
Four ports FE interconnect switch support	Yes	Yes	Yes	Yes
LED indicators for the platform	Yes	Yes	Yes	Yes
Onboard crypto acceleration	Yes	Yes	Yes	Yes
Power cord retention lock	—	Yes	Yes	Yes
Power switch lock	—	Yes	Cisco 819HG-4G ISRs only	Yes
Reset button	Yes	Yes	Yes	Yes

Table 1-7 Cisco 819 ISRs Platform Features (continued)

Platform Features	Cisco 819HG Cisco 819G (with 3G)	Cisco 819HGW Cisco 819HWD (with 3G and WiFi)	Cisco 819HG-4G Cisco 819G-4G (with 4G LTE)	Cisco 819GW (with 4G LTE and WiFi)
Real Time Clock (RTC)[1]	Yes	Yes	Yes	Yes
ScanSafe	Yes	Yes	—	Yes
Single console/AUX port	Yes	Yes	Yes	Yes
SNMP	Yes	Yes	—	Yes
TFTP support with Ethernet WAN interface	—	Yes	—	Yes
Warm reload	Yes	Yes	—	Yes

1. A real-time clock (RTC) with battery backup provides date and time when the system is powered on. The RTC is used to verify the validity of the Certification Authority stored on the router.

Antennas

The Cisco 819 3G routers provide two standard panel-mount TNC connectors to support the 3G antenna and the diversity and GPS external antenna. The main antenna is used for the primary 3G antenna. The second can be used as a diversity receive only 3G antenna or GPS antenna that does not require power supply from the router.

The Cisco 819 4G routers provide two standard panel-mount TNC connectors on the router front panel for the main and diversity antennas. The main antenna connector is used for the primary 4G antenna. The second antenna connector can be used as a diversity receive only 4G antenna. An SMA connector for active GPS antenna is also available on the front panel of the router.

The Cisco 819HGW and Cisco 819HWD ISRs also support Cisco WiFi external antennas. See the "Supported Cisco Antennas and Cables" section on page 1-35 for more information.

WiFi External Antenna

The external WiFi antenna is used to support better WiFi coverage. All external antenna supports the following:

- Dual 802.11 a/b/g/n radios
- 2x3 MIMO
- Omnidirectional

Power Switch

The power switch shuts down the router. A power switch lock is available to prevent accidental turning off of the router in the hardened SKUs.

Reset Button

The Reset button resets the router configuration to the default configuration set by the factory. To restore the router configuration to the default configuration set by the factory, use a standard size #1 paper clip with wire gauge 0.033 inch or smaller and simultaneously press the reset button while applying power to the router.

LEDs

The LEDs are located on the front panel of the router. Table 1-8 describes the 3G LEDs for the Cisco 819 ISR.

Table 1-8 3G LED Descriptions

LED	Color	Description
SYS	Yellow	FPGA download is complete.
	Green (blinking)	ROMMON is operational.
	Green (solid)	IOS is operational.
	Green (four blinks during bootup)	Reset button has been pushed during the bootup.
	Off	After powering up, when FPGA is being downloaded (in ROMMON).
ACT	Green (blinking)	Network activity on FE Switch ports, GE WAN port, 3G cellular interface, and serial interfaces.
	Off	No network activity.
WWAN	Green	Module is powered on and connected but not transmitting or receiving.
	Green (slow blinking)	Module is powered on and searching for connection.
	Green (fast blinking)	Module is transmitting or receiving.
	Off	Module is not powered.
GPS	Green (solid)	Standalone GPS.
	Green (slow blinking)	GPS is acquiring.
	Yellow (solid)	Assisted GPS.
	Yellow (slow blinking)	Assisted GPS is acquiring.
	Off	GPS is not configured.

Table 1-8 3G LED Descriptions (continued)

LED	Color	Description
RSSI	Green (solid)	Signal > –60 dBm Very strong signal
	Green (three blinks and then a long pause)	Signal <= –60 to 74 dBm Strong signal
	Green (two blinks and then a long pause)	Signal <= –75 to –89 dBm Fair signa
	Green (one blink and then a long pause)	Signal <= –90 to –109 dBm Marginal signal
	Off	Signal <= –110 dBm Unusable signal
SIM[1,2]	Green / Yellow (one green blink followed by two yellow blinks)	SIM in slot 0 active, SIM in slot 1 is not.
	Yellow / Green (one yellow blink followed by two green blinks)	SIM in slot 1 active, SIM in slot 0 is not.
	Off / Green (two green blinks and then a pause)	No SIM in slot 0, SIM present in slot 1.
	Green / Off (Slow single green blink and then a pause	SIM present in slot0, no SIM in slot 1.
	Off / Off	No SIM present in either slots.
3G	Green (one blink and then a pause)	For 1xRTT, EGPRS, or GPRS service.
	Green (two blinks and then a pause)	For EVDO, EVDO/1xRTT, or UMTS.
	Green (three blinks and then a pause)	For EVDO/1xRTT RevA, HSPA, or HSUPA/HSDPA.
	Green (solid)	For HSPA PLUS.
	Off	No Service.

1. Not applicable to Verizon and Sprint EVDO modems.
2. There is only one LED to indicate the status of two SIMs. A one-blink pattern represents the status of the SIM in slot 0, followed by a two-blink pattern for the SIM in slot 1.

Table 1-9 describes the WLAN LEDs for the Cisco 819HGW and Cisco 819HWD ISRs.

Table 1-9 WLAN LED Descriptions

WLAN LED	Color	Description
Boot loader status sequence	Blinking Green	Board initialization in progress.
		Initializing FLASH file system.
		Initializing Ethernet.
		Ethernet is OK.
		Starting Cisco IOS.
		Initialization is successful.
Association status	Green	Normal operating condition with no wireless client associated.
	Blue	Normal operating condition with at least one wireless client associated.
Operating status	Blinking Blue	Software upgrade in progress.
	Rapidly cycling through Green, Red, and White	Access point location command invoked.
	Blinking Red	Ethernet link is not operational.
Boot loader errors	Blinking Red and Blue	FLASH file system failure.
	Blinking Red and Off	Environment variable failure.
		Bad MAC address.
		Ethernet failure during the image recovery.
		Boot environment failure.
		No Cisco image file.
		Boot failure.
Cisco IOS errors	Red	Software failure. Try to disconnect and reconnect the unit power.

Table 1-10 describes the 4G LTE LEDs for the Cisco 819 ISR.

Table 1-10 4G LTE LED Descriptions

LED	Color	Description
SYS	Yellow	FPGA download is complete.
	Green (blinking)	ROMMON is operational.
	Green (solid)	IOS is operational.
	Green (four blinks during bootup)	Reset button has been pushed during the bootup.
	Off	After powering up, when FPGA is being downloaded (in ROMMON).

Table 1-10 4G LTE LED Descriptions (continued)

LED	Color	Description
ACT	Green (blinking)	Network activity on FE Switch ports, GE WAN port, 3G cellular interface, and serial interfaces.
	Off	No network connectivity.
WWAN	Green	Module is powered on and connected but not transmitting or receiving.
	Green (slow blinking)	Module is powered on and searching for connection.
	Green (fast blinking)	Module is transmitting or receiving.
	Off	Module is not powered.
GPS	Green (solid)	Standalone GPS.
	Green (slow blinking)	GPS is acquiring.
	Yellow (solid)	Assisted GPS.
	Yellow (slow blinking)	Assisted GPS is acquiring.
	Off	GPS is not configured.
RSSI	Green (solid)	Signal > –60 dBm Very strong signal
	Green (three blinks and then a long pause)	Signal <= –60 to 74 dBm Strong signal
	Green (two blinks and then a long pause)	Signal <= –75 to –89 dBm Fair signal
	Green (one blink and then a long pause)	Signal <= –90 to –109 dBm Marginal signal
	Off	Signal <= –110 dBm Unusable signal
SIM	Green / Yellow (one green blink followed by two yellow blinks)	SIM in slot 0 is active, SIM in slot 1 is not.
	Yellow / Green (one yellow blink followed by two green blinks)	SIM in slot 1 is active, SIM in slot 0 is not.
	Off / Green (two green blinks and then a pause)	No SIM in slot 0, SIM present in slot 1.
	Green / Off (Slow single green blink and then a pause)	SIM present in slot 0, no SIM in slot 1.
	Off / Off	No SIM present in either slots.

Table 1-10 4G LTE LED Descriptions (continued)

LED	Color	Description
3G/4G	Green (one blink and then a pause)	For 1xRTT, EGPRS, or GPRS service.
	Green (two blinks and then a pause)	For EVDO, EVDO/1xRTT, or UMTS service.
	Green (three blinks and then a pause)	For EVDO/1xRTT RevA, HSPA, or HSUPA/HSDPA service.
	Green (four blinks and then a pause)	For HSPA+ service.
	Green (Solid)	For 4G/LTE service.
	Off	No Service.

Memory

The Cisco 819HG and Cisco 819G ISRs uses non-upgradable flash memory and main memory. The onboard flash memory contains the Cisco IOS software image and the boot flash contains the ROMMON boot code. Table 1-11 lists the memory requirements for Cisco 819 ISRs.

Table 1-11 Memory Requirements for Cisco 819 ISRs

Memory Requirements	Cisco 819HG Cisco 819G (with 3G)	Cisco 819HGW Cisco 819HWD (with WiFi)	Cisco 819HG-4G Cisco 819G-4G (with 4G LTE)
256 Compact Flash support in IDE mode (internal)	Yes	—	—
1 GB Compact Flash support in IDE mode (internal)	—	Yes	Yes
512 MB DRAM	Yes	—	—
1 GB DRAM	—	Yes	Yes

Embedded 3G Modem

The 3G cellular interface is the primary WAN data link, but it can also be used as a backup data link. The 3G technology is third-generation wide-area cellular technology that is used in broadband wireless data in a mobile environment.

Embedded 4G LTE Modem

The Cisco 819HG-4G and Cisco 819G-4G routers have an embedded 4G LTE modem provided by Sierra Wireless. The Verizon SKUs come with an MC7750 modem, the AT&T SKUs come with an MC7700 modem, and the Global SKUs come with an MC7710 modem.

SIM Card

Table 1-12 lists the SIM Card slots available for Cisco the 819 ISRs.

Table 1-12 SIM Card Slot

Two Internal SIM Card Slots	One Internal SIM Card Slot	No SIM Card Slot
C819G-U-K9	C819HG-4G-V-K9	C819HG-V-K9
C819G+7-K9	C819G-4G-V-K9	C819HG-S-K9
C819HG-U-K9	C819HG-4G-A-K9	C819G-V-K9
C819HG+7-K9	C819G-4G-A-K9	C819G-S-K9
C819HGW+7-A-A-K9	C819G-4G-VZ-K9	C819HGW-V-A-K9
C819HGW+7-E-K9	C819G-4G-ST-K9	C819HGW-S-A-K9
C819HGW+7-N-K9	C819G-4G-NA-K9	C819HG-B-K9
C819HG-4G-G-K9		C819G-B-K9
C819G-4G-G-K9		
C819GW-LTE-MNA-AK9		
C819GW-LTE-GA-EK9		
C819G-LTE-LA-K9		
C819G-4G-GA-K9		
C819G-LTE-MNA-K9		
C819HG-LTE-MNA-K9		
C819GW-LTE-LA-CK9		
C819GW-LTE-LA-QK9		
C819GW-LTE-LA-NK9		

Supported Cisco Antennas and Cables

The Cisco 819 ISR provides two standard panel-mount TNC connectors to support the 3G antenna and the diversity and GPS external antenna. The main antenna is used for the primary 3G antenna. The second can be used as a diversity receive only 3G antenna or GPS antenna that does not require power supply from the router.

Note A Lightning Arrestor must be used when you install antenna outdoor. Note that the center conductor is not protected under 200V (sparkover voltage nominal value).

Table 1-13 lists the Cisco 3G antennas that are supported for use on Cisco 819 ISRs.

Table 1-13 Supported Cisco 3G Antennas

Cisco Part Number	Antenna Type	Maximum Gain and Frequency Range	Description
3G-ANTM1919D	Dipole omnidirectional	0 dBi (806–960 MHz) 0 dBi (1710–2170 MHz)	This is the default antenna with dual faceplate mount. Multiband faceplate-mounted dipole antenna. For more information, see *Cisco Multiband Swivel Mount Dipole Antenna (3G-ANTM1919D)*.
3G-ANTM1916-CM	High-gain ceiling-mount omnidirectional	1.5 dBi (806–960 MHz) 2.5 dBi (1710–2170 MHz)	Multiband ceiling-mounted omnidirectional antenna. For more information, see *Cisco Multiband Omnidirectional Ceiling Mount Antenna (3G-ANTM1916-CM)*.
3G-AE015-R (Antenna Extension)	Extension base	0.8–6.0 GHz	This antenna extension is a base with a 15-foot cable included for use with a dipole omnidirectional antenna. For more information, see *Cisco Single-Port Antenna Stand for Multiband TNC Male-Terminated Portable Antenna (3G-AE015-R)*.
3G-ANTM-OUT-OM	Outdoor Omnidirectional	+2 dBi 800/900 MHz +4 dBi 1800/1900/2100 MHz	This is an outdoor low-profile omindirectional mast antenna. For more information, see *Cisco 3G Omnidirectional Outdoor Antenna (3G-ANTM-OUT-OM)*.
3G-ANTM-OUT-LP	Low Profile Stick Antenna	–1.5 dBi 850, 900 MHz –2.5 dBi 1800, 1900, 2100 MHz	This is an omindirectional stick antenna. For more information, see *Cisco 3G Low Profile Outdoor Antenna (3G-ANTM-OUT-LP)*.
3G-ACC-OUT-LA (Lightning Arrestor)	Lightning Arrestor	800–2200 MHz	This is a quarter-wave lightning protector with integrated high-pass filter. For more information, see *Cisco 3G Lightning Arrestor (3G-ACC-OUT-LA)*.

Table 1-14 lists the supported Cisco WiFi antenna for Cisco 819HGW and Cisco 819HWD ISRs.

Table 1-14 Supported Cisco WiFi Antenna

Antenna	Frequency band(s)	Mounting Mechanical	IP Rating	Peak Gain 2.4 GHz (dBi)	Peak Gain 5 GHz (dBi)	Description
AIR-ANTM2050D-R	2.4–2.5 GHz 4.9–5.9 GHz	Faceplate Dipole	IP 41	1.4	4.5	This is the default antenna. For more information, see *Cisco Multiband Swivel-Mount Dipole Antenna (AIR-ANTM2050D-R).*
AIR-ANT2430V-R	2.4 GHz	Ceiling	IP 41	3	—	For more information, see *Cisco Aironet 3-dBi Omnidirectional Antenna (AIR-ANT2430V-R).*
AIR-ANT5140V-R	5 GHz	Ceiling	IP 41	—	4	For more information, see *Cisco Aironet 4-dBi Omnidirectional Antenna (AIR-ANT5140V-R).*
AIR-ANT2440NV-R	2.4 GHz	Multi-mount (Wall/Ceiling /Mast)	IP 54	4	—	For more information, see *Cisco Aironet 2.4-GHz MIMO Wall-Mounted Omnidirectional Antenna (AIR-ANT2440NV-R).*
AIR-ANT5140NV-R	5 GHz	Multi-mount (Wall/Ceiling /Mast)	IP 54	—	4	For more information, see *Cisco Aironet 5-GHz MIMO Wall Mount Omnidirectional Antenna (AIR-ANT5140NV-R).*

Table 1-15 lists the Cisco 4G LTE antennas that are supported for use on Cisco 819 ISRs.

Table 1-15 Supported 4G LTE Antennas

Cisco Part Number	Description	Maximum Gain and Frequency Ranges	Description
4G-LTE-ANTM-D	Indoor 4G dipole omnidirectional antenna	• 2 dBi – 698 to 806 MHz – 824 to 894 MHz – 925 to 960 MHz – 1710 to 1885 MHz – 1920 to 1980 MHz – 2110 to 2170 MHz – 2500 to 2690 MHz	Multiband dipole antenna. For more information, see *Cisco 4G/3G Omnidirectional Dipole Antenna (4G-LTE-ANTM-D)*.
4G-ANTM-OM-CM	Indoor ceiling-mount omnidirectional antenna	698 to 2690 MHz	Multiband omnidirectional ceiling-mount antenna. For more information, see *Cisco 4G Indoor Ceiling-Mount Omnidirectional Antenna (4G-ANTM-OM-CM)*.
ANT-4G-OMNI-OUT-N	Multiband outdoor omnidirectional stick antenna	• 1.5 dBi – 698 to 960 MHz • 3.5 dBi – 1710 to 2710 MHz – 2300 to 2700 MHz	Multiband outdoor omnidirectional stick antenna. For more information, see *Cisco Outdoor Omnidirectional Antenna for 2G/3G/4G Cellular (ANT-4G-OMNI-OUT-N)*.
ANT-4G-SR-OUT-TNC	Multiband outdoor omnidirectional saucer antenna	• 1.5 dBi (peak gain with 10-foot cable) or 0.8 dBi (peak gain with 15-foot cable) – 698 to 960 MHz • 3.7 dBi (peak gain with 10-foot cable) or 0.2 dBi (peak gain with 15-foot cable) – 1710 to 2700 MHz	Low-profile outdoor saucer antenna. For more information, see *Cisco Integrated 4G Low-Profile Outdoor Saucer Antenna (ANT-4G-SR-OUT-TNC)*.
CGR-LA-NF-NF	Lighning Arrestor	800 to 2200 MHz	4G lightning arrestor kit for use on Cisco 4G wireless devices. For more information, see *Lightning Arrestor for the Cisco 1240 Connected Grid Router*.
4G-ACC-OUT-LA	Lightning Arrestor	800 to 2200 MHz	4G lightning arrestor kit for use on Cisco 4G wireless devices. For more information, see *Cisco 4G Lightning Arrestor (4G-ACC-OUT-LA)*.

Table 1-16 to Table 1-18 list the extension cables for use with 3G, WiFi, and 4G LTE antennas. The tables include the insertion loss information for the ultra-low-loss (ULL) LMR 400 extension cables.

Table 1-16 Cisco Extension Cables for Use with 3G Antennas

Cisco Product Number	Cable Length	Insertion Loss	Frequency (MHz)
3G-CAB-ULL-20	20 ft (6 m)	1.50 dB max	2100
3G-CAB-ULL-50	50 ft (15 m)	3.50 dB max	2100
3G-CAB-LMR240-25	25 ft (7.5 m)	3.50 dB max	2200
3G-CAB-LMR240-50	50 ft (15 m)	6.90 dB max	2200
3G-CAB-LMR240-75	75 ft (23 m)	10.5 dB max	2200

Table 1-17 Cisco Extension Cables for Use with WiFi Antennas

Cisco Product Number	Cable Length	Insertion Loss	Frequency (MHz)
AIR-CAB005LL-R	5 ft (1.524 m) (one RP-TNC plug, one RP-TNC jack)	0.5 dB 0.8 dB	2400 5800
AIR-CAB020LL-R	20 ft (6 m) (one RP-TNC plug, one RP-TNC jack)	1.3 dB 2.5 dB	2400 5800
AIR-CAB050LL-R	50 ft (15.24 m) (one RP-TNC plug, one RP-TNC jack)	3.4 dB 5.75 dB	2400 5800

Table 1-18 Cisco Extension Cables for Use with 4G LTE Antennas

Cisco Product Number	Cable Length	Maximum Insertion Loss	Frequency (MHz)	Color	Plenum Rated?[1]
4G-AE010-R	10 ft (3 m)	1.4 dB at 700 MHz 2.0 dB at 1.9 GHz 2.1 dB at 2.1 GHz 2.3 dB at 2.5 GHz	700 to 2600 MHz	Black	No
4G-AE015-R	15 ft (4.6 m)	2.3 dB at 700 MHz 3.3 dB at 1.9 GHz 3.7 dB at 2.1 GHz 4.0 dB at 2.5 GHz	700 to 2600 MHz	Black	No
4G-CAB-LMR240-25	25 ft (7.6 m)	2.1 dB at 700 MHz 4.0 dB at 2.6 GHz	700 to 1000 MHz 1700 to 2600 MHz	Black	Yes

Table 1-18 Cisco Extension Cables for Use with 4G LTE Antennas (continued)

Cisco Product Number	Cable Length	Maximum Insertion Loss	Frequency (MHz)	Color	Plenum Rated?[1]
4G-CAB-LMR240-50	50 ft (15 m)	4.1 dB at 700 MHz 7.4 dB at 2.6 GHz	700 to 1000 MHz 1700 to 2600 MHz	Black	Yes
4G-CAB-LMR240-75	75 ft (23 m)	6.1 dB at 700 MHz 11.0 dB at 2.6 GHz	700 to 1000 MHz 1700 to 2600 MHz	Black	Yes
4G-CAB-LMR240-25N	25 ft (7.6 m)	2.1 dB at 700 MHz 4.0 dB at 2600 MHz	700 to 1000 MHz 1700 to 2600 MHz	Black	No
4G-CAB-ULL-20	20 ft (6 m)	1.8 dB	700 to 2600 MHz	Black	Yes
4G-CAB-ULL-50	50 ft (15 m)	4.2 dB	700 to 2600 MHz	Black	Yes
CAB-L400-20-TNC-N	20 ft (6 m)	1.75 dB	700 to 2600 MHz	Black	No
CAB-L400-50-TNC-N	50 ft (15 m)	4.0 dB	700 to 2600 MHz	Black	No
CAB-L400-20-N-N	20 ft (6 m)	2.75 dB	700 to 2600 MHz	Black	No

1. Cable can be routed within building plenum spaces.

Serial Port

The Cisco standard High Speed Smart Serial 12-in-1 connector allows the highest flexibility of connections to various DTE/DCE devices. The 12-in-1 serial interface pins connect to the FPGA. The FPGA configures the pin directions based on the cable type used. Figure 1-10 shows the magnified view of the 12-in-1 serial port. For more information, see *About Serial Connections*.

Figure 1-10 12-in-1 Serial Port

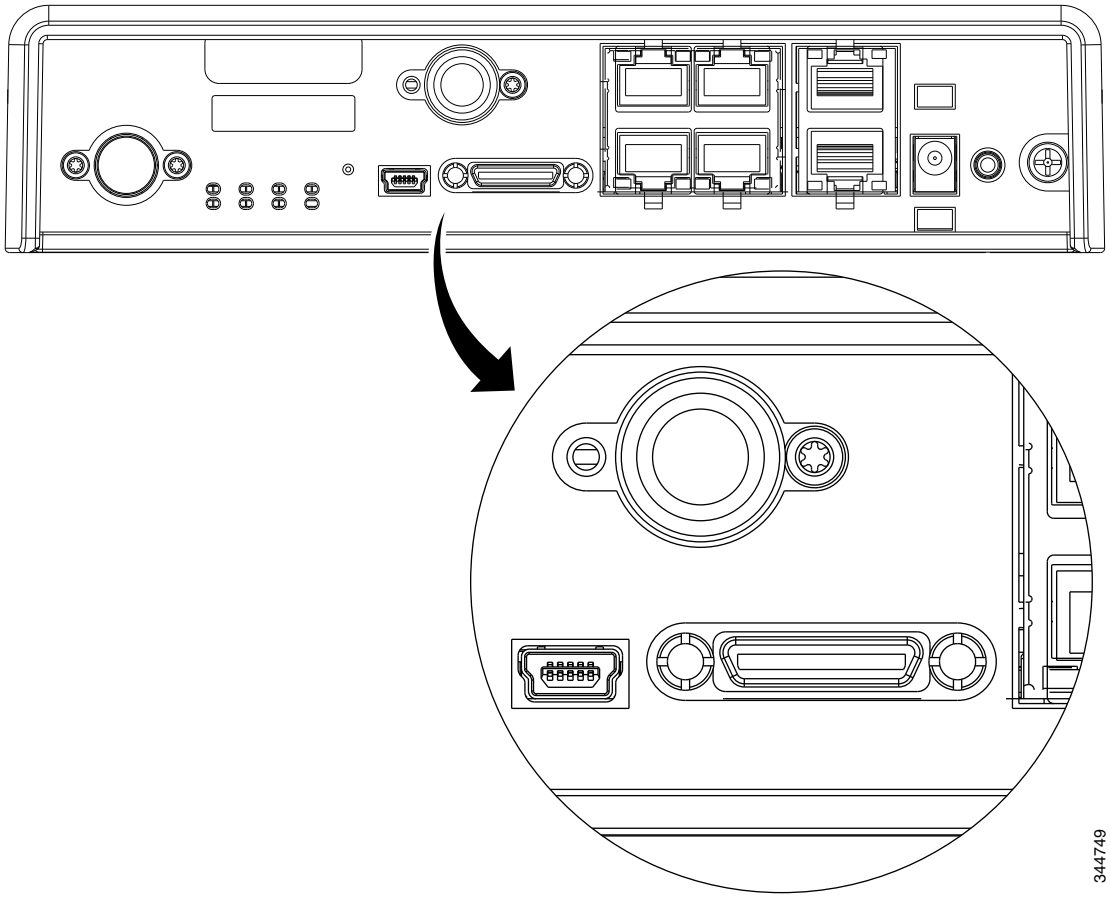

Power Supply

All SKUs require a 5 VDC power source. Cisco 819HG and Cisco 819G ISRs have a self-locking Molex mini-fit connector. Cisco 819HGW and Cisco 819HWD ISRs use a 5.5 mm barrel-type connector with separate locking clip. An external AC power adapter is supported by default. The optional external power adapters are available to support a variety of DC power sources, suitable for fixed, vehicle, or railway installations. The 5 VDC power input of the router is protected from over-voltage up to 20 VDC. The router will not power up if excessive voltage (for example, a 12 VDC adapter) is connected.

AC Power Adapter

The default configuration includes an external AC adapter that supplies up to 20 W of power. The AC power connection is a two-pin IEC 320 C8 receptacle. A mating AC power cord is supplied. The AC adapter does not provide chassis grounding to the router. A 1.3-meter long output cable connects to the router.

DC Power Adapters

The optional external DC power adapters are available for 12 VDC and 24 VDC nominal vehicle power.

- 12 VDC vehicle adapter has a 10 VDC to 36 VDC operating range
- 24 VDC vehicle adapter has an 18 VDC to 75 VDC operating range
- 48 VDC vehicle adapter has an 20 VDC to 60 VDC operating range

•

The vehicle power adapters may be used for fixed or mobile installations. They do not provide electrical isolation; the input negative is connected to the output negative (chassis ground). Input cable is 350 millimeter long with stripped and tinned bare wire connections. The input positive connection is a white wire and the input negative is a black wire.

Railway Power Adapters

The optional external power adapters meeting Railway Standards are available from a third-party supplier, Martek Power. Contact Martek Power directly to order and for detailed specifications. The use of Martek Power adapters listed in the "Supported Power Adapters" section on page A-9 will maintain Cisco warranty and support of the router; the power adapter itself is covered by Martek warranty. Input connection to the railway adapters is by a 350 millimeter long wire with stripped and tinned bare wire connection. A 1.3-meter long output cable connects to the router.

Accessories

Table 1-19 lists the accessories available for the Cisco 819 ISRs. For a complete list of SKUs that support these accessories, see the "Platform Features for Cisco 819 ISRs" section on page 1-27.

Table 1-19 Cisco 819 ISR Accessories

Cisco Part Number	Accessory
69-2453-01	Power cord retention lock
69-2454-01	Power switch lock cover

Cisco 860, 880, 890 Series

This section provides an overview of the features available for the Cisco 860 series, Cisco 880 series, and Cisco 890 series Integrated Services Routers (ISRs), and contains the following sections:

- General Description, page 1-43
- Cisco 860 Series ISRs, page 1-43
- Cisco 860VAE Series ISRs, page 1-45
- Cisco 860VAE-W-A-K9, Cisco 860VAE-W-E-K9, and Cisco 860VAE-POE-W-A-K9 ISRs, page 1-50
- Cisco 880 Series ISRs, page 1-53
- Cisco C881, C886, and C887 Series ISRs, page 1-66
- Cisco C880 Series and Cisco C890 Series 4G LTE Integrated Services Routers, page 1-76
- Cisco 890 Series Integrated Service Routers, page 1-114
- Cisco C891 Series ISRs, page 1-127
- Hardware Features, page 1-132

Note For compliance and safety information, see *Regulatory Compliance and Safety Information Roadmap* that ships with the router and *Regulatory Compliance and Safety Information for Cisco 800 Series.*

Note Some illustrations in this document show a wireless router. Both wireless and nonwireless models are available in the Cisco 860 series, Cisco 880 series, and Cisco 890 series ISRs. Port and feature locations are similar for both wireless and nonwireless routers.

Note Throughout this document the term VDSL refers to support for VDSL2 (ITU G.993.2) and ADSL refers to support for ADSL, ADSL2, & ADSL2+ (ITU G.992.1, G.992.3, & G.992.5).

General Description

The Cisco 860 series, Cisco 880 series, and Cisco 890 series ISRs provide data, voice, Wi-Fi CERTIFIED™ wireless access point (AP), integrated Virtual Private Network (VPN), and backup capabilities to corporate teleworkers and to remote and small offices with fewer than 20 users. These routers are capable of bridging and multiprotocol routing between LAN and WAN ports. The routers provide advanced features, such as high speed DSL (G.SHDSL, ADSL, or VDSL), 802.11n, quality of service (QoS), firewall, antivirus protection, and Secure Socket Layer (SSL). The Cisco 860VAE, 886VA and 887VA series routers have the additional capability of DSL Multi-mode (VDSL/ADSL).

The Cisco 860 series, Cisco 880 series, and Cisco 890 series ISRs have a desktop form factor with built-in wall-mount features. The Cisco 890 series ISRs also have optional rack-mount features. These ISRs are powered by an external power supply adapter. The various models differ in the WAN interface and features that they support.

Cisco 860 Series ISRs

The Cisco 860 series ISRs are fixed-configuration data routers that support the following features:

- An integrated 4-port 10/100 Ethernet switch for connecting to the LAN
- A10/100 Fast Ethernet (FE) port for connecting to the WAN.
- Optional, embedded Wi-Fi CERTIFIED™, 802.11b/g/n-compliant wireless AP

Figure 1-7 shows the front panel details of the Cisco 860 wireless router.

Figure 1-11 Front Panel of the Cisco 860 Series Wireless ISR

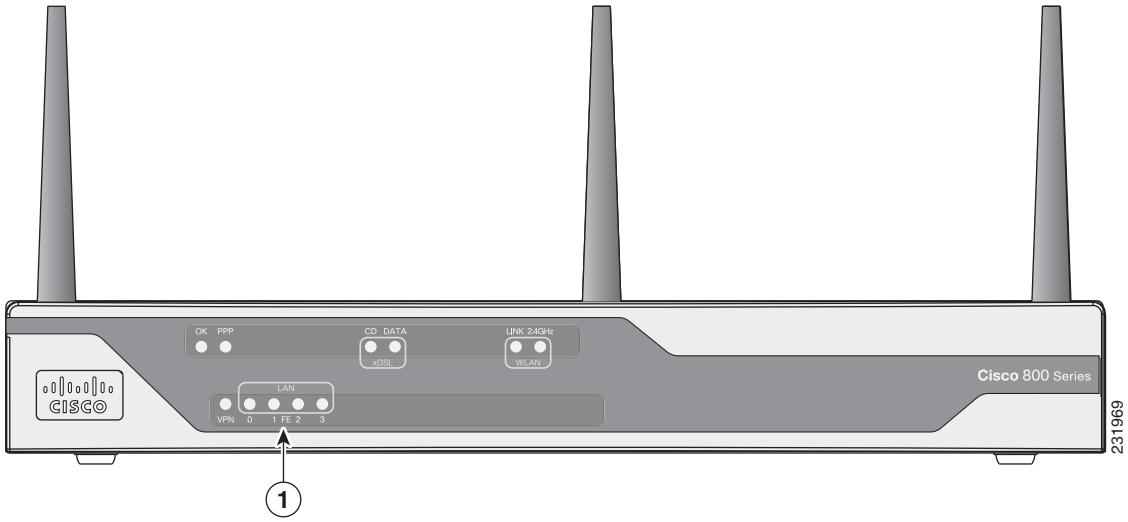

1	LEDs		

Figure 1-12 shows the back panel details of the Cisco 861 wireless (861W) ISR. Nonwireless routers do not have antennas on the back panel. However, the feature locations are similar for all Cisco 860 series routers.

Figure 1-12 Back Panel of the Cisco 861W ISR

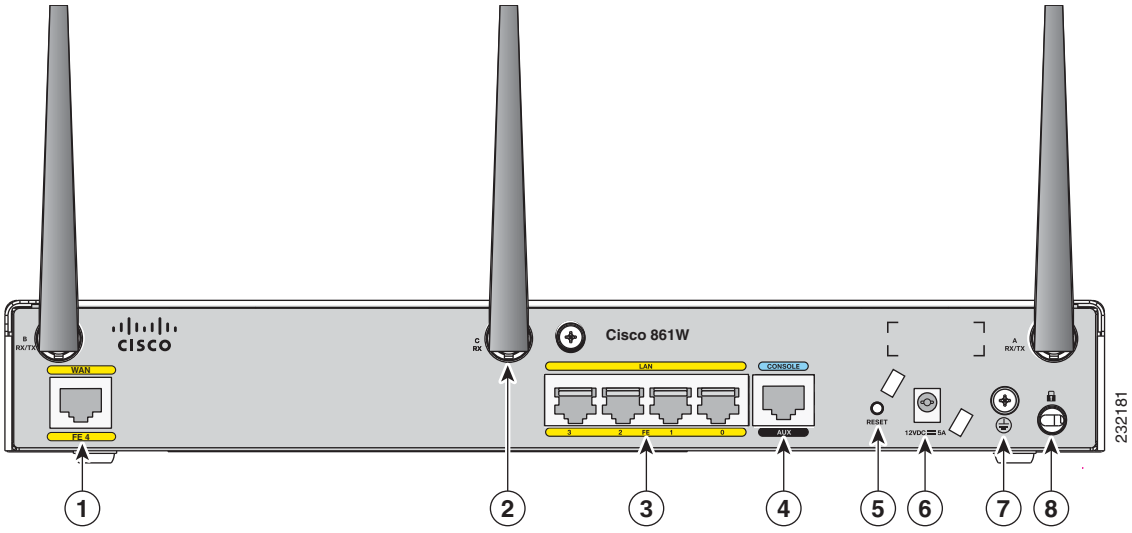

1	Primary WAN port—10/100	**5**	Reset button
2	Antenna—captive omnidirectional dipole WLAN antenna (wireless models only)	**6**	Power connector
3	4-port 10/100 Ethernet switch	**7**	Earth ground connection
4	Serial port—console or auxiliary	**8**	Kensington security slot

Cisco 860VAE Series ISRs

The Cisco 860VAE series ISRs are fixed-configuration data routers. This section describes the features of the products in this series.

Interfaces

Table 1-20 describes the interfaces of the Cisco 860VAE series routers.

Table 1-20 Interfaces of the Cisco 860VAE Series ISRs

Interfaces	Model			
	Cisco 866VAE	Cisco 867VAE	Cisco 866VAE-K9	Cisco 867VAE-K9
4 FE[1] switch ports	x	x	x	x
1 GE[2] switch port	—	—	x	x
1 GE WAN port	x	x	x	x
1 VDSL/ADSL over POTS port	—	x	—	x
1 VDSL/ADSL over ISDN port	x	—	x	—

1. FE = Fast Ethernet
2. GE = Gigabit Ethernet

Note The Cisco 866VAE, 867VAE, 866VAE-K9, and 867VAE-K9 routers each have two WAN ports. Only one of the two ports can be active at any given time.

Table 1-21 describes the interfaces of the C860VAE series routers.

Table 1-21 Interfaces of the C860VAE Series ISRs

Interfaces	Model		
	C867VAE	C866VAE-K9	C867VAE-K9
3 FE[1] switch ports	x	x	x
2 GE[2] switch port	x	x	x
1 GE WAN port	x	x	x
1 VDSL/ADSL over POTS port	x	—	x
1 VDSL/ADSL over ISDN port	—	x	—

1. FE = Fast Ethernet
2. GE = Gigabit Ethernet

IOS Images

Table 1-22 describes the IOS images included in Cisco 860VAE series routers.

Table 1-22 IOS Images of the Cisco 860VAE Series ISRs

IOS Image	Model			
	Cisco 866VAE	Cisco 867VAE	Cisco 866VAE-K9	Cisco 867VAE-K9
c860vae-ipbasek9-mz	x	x	—	—
c860vae-advsecurityk9-mz	—	—	x	x
c860vae-advsecurityk9_npe-mz	—	—	x	x

Table 1-23 describes the IOS images included in C860VAE series routers.

Table 1-23 IOS Images of the C860VAE Series ISRs

IOS Image	Model		
	C867VAE	C866VAE-K9	C867VAE-K9
c860vae-ipbasek9-mz	x	—	—
c860vae-advsecurityk9-mz	—	x	x
c860vae-advsecurityk9_npe-mz	—	x	x

Figure 1-13 shows the front panel details of the Cisco 866VAE, Cisco 867VAE, Cisco 866VAE-K9, and Cisco 867VAE-K9 integrated services routers (ISRs).

Figure 1-13 Front Panel of the Cisco 860VAE series ISR

1	LEDs		

Figure 1-14 shows the front panel details of the C867VAE, C866VAE-K9, and C867VAE-K9 integrated services routers (ISRs).

Figure 1-14 Front Panel of the C860VAE series ISR

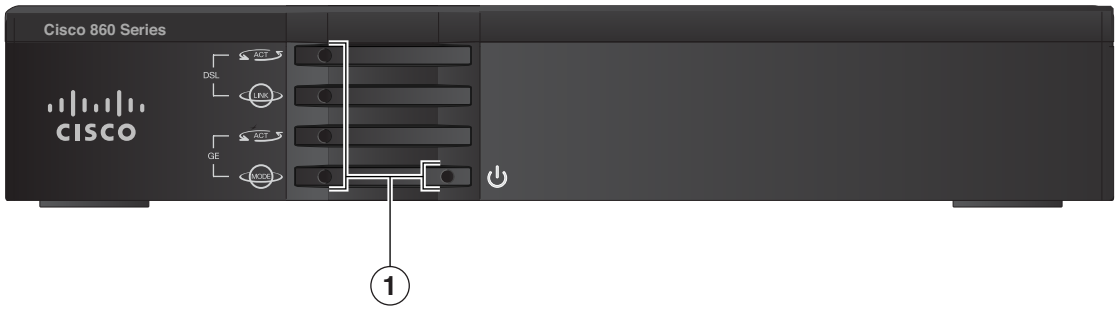

1	LEDs		

Figure 1-15 shows the back panel details of the Cisco 866VAE ISR.

Figure 1-15 Back Panel of the Cisco 866VAE ISR

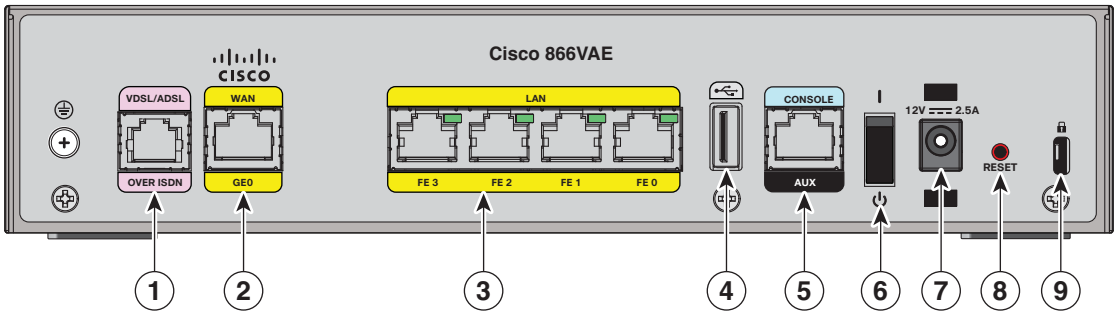

1	xDSL port[1]	**6**	On/Off switch
2	GE WAN interface	**7**	Power connector
3	Ethernet LAN FE interfaces (FE0 through FE3 interfaces)	**8**	Reset button
4	USB port	**9**	Kensington security slot
5	Serial port—console or auxiliary		

1. Using RJ-11.

Figure 1-16 shows the back panel details of the C867VAE ISR.

Figure 1-16 Back Panel of the C867VAE ISR

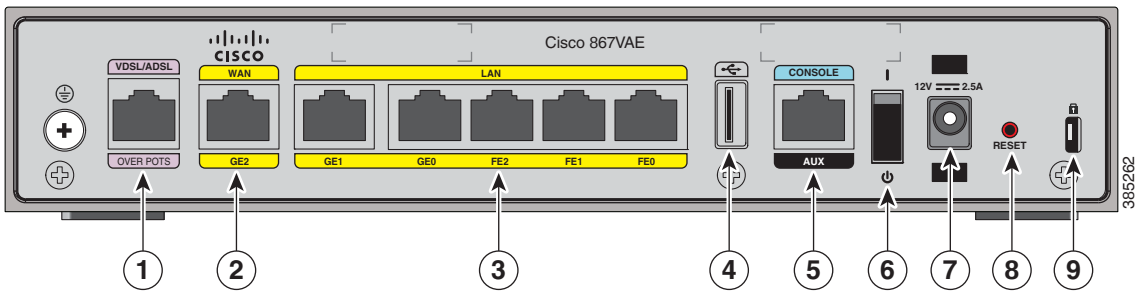

1	xDSL port[1]	**6**	On/Off switch
2	GE WAN interface	**7**	Power connector
3	Ethernet LAN GE and FE interfaces (GE0, GE1 interfaces and FE0 through FE2 interfaces)	**8**	Reset button
4	USB port	**9**	Kensington security slot
5	Serial port—console or auxiliary		

1. Using RJ-11.

Figure 1-17 shows the back panel details of the Cisco 867VAE-K9.

Figure 1-17 Back Panel of the Cisco 867VAE-K9 ISR

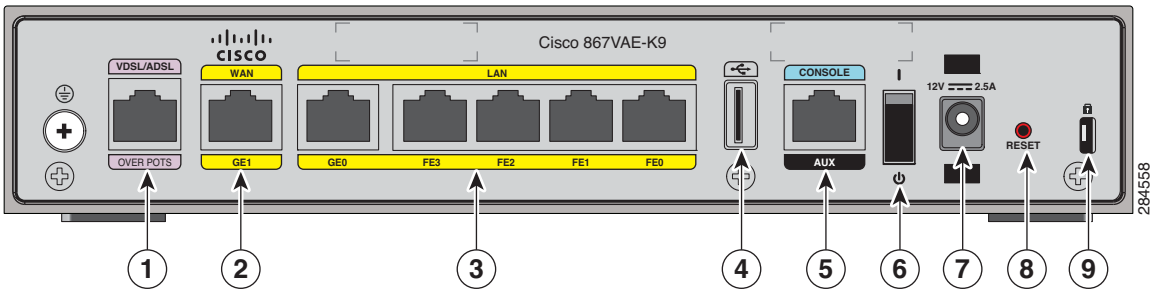

1	xDSL port	**6**	On/Off switch
2	GE WAN interface	**7**	Power connector
3	Ethernet LAN GE and FE interfaces (GE0 interface and FE0 through FE3 interfaces)	**8**	Reset button
4	USB port	**9**	Kensington security slot
5	Serial port—console or auxiliary		

Figure 1-18 shows the back panel details of the C866VAE-K9.

Figure 1-18 Back Panel of the C866VAE-K9 ISR

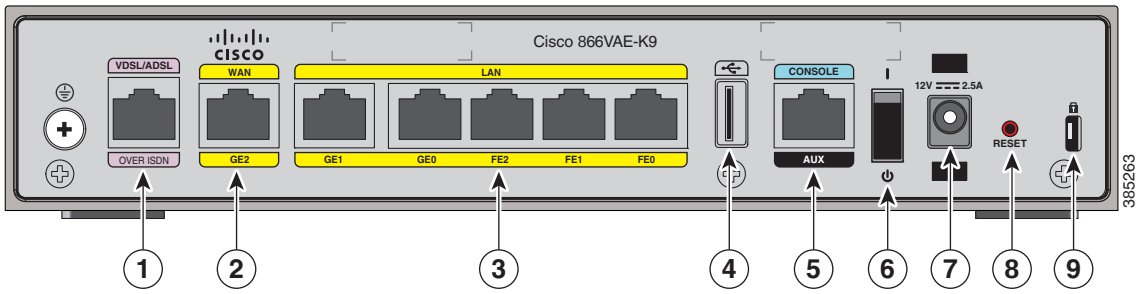

1	xDSL port	**6**	On/Off switch
2	GE WAN interface	**7**	Power connector
3	Ethernet LAN GE and FE interfaces (GE0, GE1 interfaces and FE0 through FE2 interfaces)	**8**	Reset button
4	USB port	**9**	Kensington security slot
5	Serial port—console or auxiliary		

Figure 1-19 shows the back panel details of the C867VAE-K9.

Figure 1-19 Back Panel of the C867VAE-K9 ISR

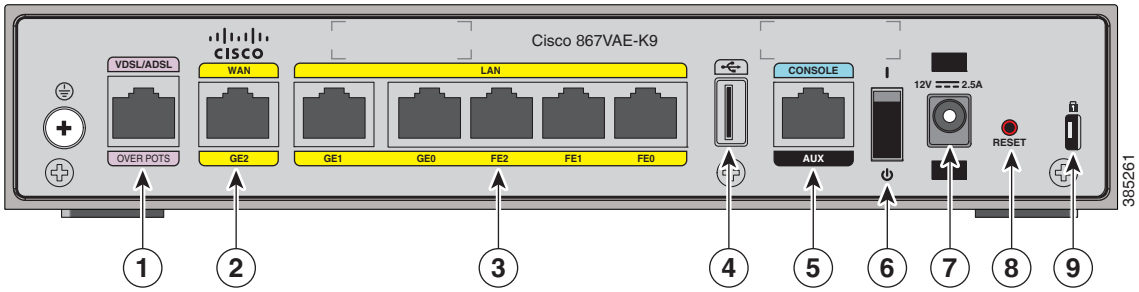

1	xDSL port	**6**	On/Off switch
2	GE WAN interface	**7**	Power connector
3	Ethernet LAN GE and FE interfaces (GE0, GE1 interfaces and FE0 through FE2 interfaces)	**8**	Reset button
4	USB port	**9**	Kensington security slot
5	Serial port—console or auxiliary		

Cisco 860VAE-W-A-K9, Cisco 860VAE-W-E-K9, and Cisco 860VAE-POE-W-A-K9 ISRs

This section provides a hardware overview of the following Cisco 860VAE Series Integrated Services Routers (ISRs):

- C866VAE-W-E-K9
- C867VAE-W-A-K9
- C867VAE-W-E-K9
- C867VAE-POE-W-A-K9

Model-Specific Features

Table 1-24 describes the features specific to each of these router models:

Table 1-24 Model-Specific Router Features

Feature	C866VAE-W-E-K9	C867VAE-W-A-K9	C867VAE-W-E-K9	C867VAE-POE-W-A-K9
WAN interface and mode	One GE port, DSL over ISDN, Europe WiFi	One GE port, DSL over POTS, America WiFi	One GE port, DSL over POTS, Europe WiFi	One GE port, DSL over POTS, America WiFi
Power-over-Ethernet (PoE)	No	No	No	Yes

Common Features

The following key features are common to each of these router models:

- Dual WAN interface (Gigabit Ethernet [GE] and dual-mode ADSL2+ /VDSL2)
- 2.4 GHz wireless LAN (WLAN) interface
- Five Layer 2 LAN switches: two Gigabit Ethernet and three Fast Ethernet
- One USB 2.0 port in high-speed host mode
- One RJ-45 console port (RS-232 interface)
- Support for up to 512 MB DRAM using DDR in 16-bit mode
- Support for 8 MB Serial Peripheral Interface Bus (SPI) flash memory for boot and 128 MB NAND flash memory for storing IOS
- Reset/Recovery switch
- Silent convection cooling—no fan

External Interfaces

Figure 1-20 shows the back I/O panel of the Cisco 867VAE-POE-W-A-K9 series router.

Figure 1-20 Back I/O Panel

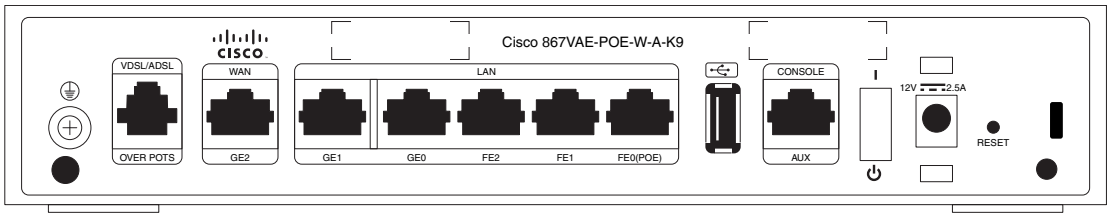

Table 1-25 describes the external interfaces included with these router models.

Table 1-25 External Interfaces

Interface	Connector	Quantity	Port	Port Label
FE LAN port	RJ-45	3	FE LAN PORT 0	FE0[1]
			FE LAN PORT 1	FE1
			FE LAN PORT 2	FE2
GE LAN port	RJ-45	2	GE LAN PORT 0	GE0
			GE LAN PORT 1	GE1
GE WAN port (10/100/1000 Base-T)	RJ-45	1	GE WAN PORT	GE2
ADSL2+/VDSL2 WAN port	RJ-11	1	—	—
Host USB port	USB 2.0	1	—	—
Console port	RJ-45	1	—	—

1. Provides Power-over-Ethernet (PoE) for the Cisco C867VAE-POE-W-A-K9.

Note For the Cisco C867VAE-POE-W-A-K9, Power-over-Ethernet (PoE) is available using port FE0, with a 60-W power supply.

USB Interface

The USB 2.0 interface enables:

- Transferring data using a USB flash token (USB memory stick) for system recovery and other tasks.
- Cisco IOS software boot from USB.

Use only the following Cisco USB 2.0 flash tokens:

- MEMUSB-128FT (128 MB)
- MEMUSB-256FT (256 MB)
- MEMUSB-1024FT (1 GB)

Note The USB 2.0 port cannot be used for connecting external devices or as a console for devices other than those specified in the *USB eToken Device and USB Flash Features Support Data Sheet*, available at: http://www.cisco.com/en/US/prod/collateral/modules/ps6247/product_data_sheet0900aecd80232473.html

LED Indicators

These router models include LED indicators on the back panel for each LAN port, and additional LED indicators on the front panel of the unit.

LED Indicators for LAN Ports

On the back panel of the unit, each LAN port includes an LED indicator. Table 1-26 describes the LED indicators.

Table 1-26 Back Panel LED Indicators for LAN Ports

Port	LED Color	Description
FE Ports		
FE LAN 0	Green	Off—No link. Faster flashing indicates heavier traffic.
FE LAN 1	Green	Off—No link. Faster flashing indicates heavier traffic.
FE LAN 2	Green	Off—No link. Faster flashing indicates heavier traffic.
GE Ports		
GE LAN 0	Green	Off—No link. Faster flashing indicates heavier traffic.
GE LAN 1	Green	Off—No link. Faster flashing indicates heavier traffic.

LED Indicators on Front Panel

The front panel includes several LED indicators. Figure 1-21 shows the location of the LED indicators.

Figure 1-21 Front Panel LED Indicators

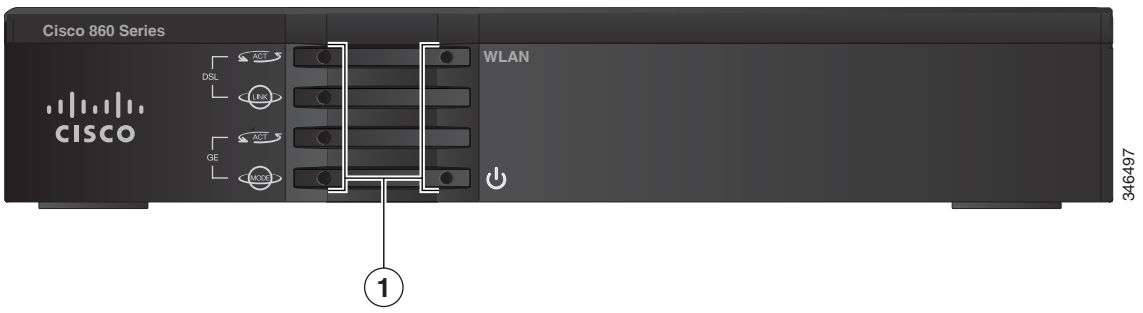

1	LED indicators		

Table 1-27 describes the LED indicators.

Table 1-27 Front Panel LED Indicators

LED	LED Color	LED Activity	Description
Left Side			
DSL ACT	Green	Flashing	DSL WAN activity. Faster flashing indicates heavier traffic.
	Off	—	Device is powered off. or No DSL WAN activity.
DSL LINK	Green	Solid	DSL WAN mode is selected and DSL training is complete.
		Flashing	DSL WAN mode is selected but DSL LinkUp state is incomplete, such as in-training (slow initially, fast when almost connected).
	Off	—	Device is powered off. or GE WAN mode is selected.
GE ACT	Green	Flashing	GE WAN activity (traffic in either direction). Faster flashing indicates heavier traffic.
	Off	—	Device is powered off. or No GE WAN activity. or No link.
GE MODE	Green	Solid	GE WAN mode is selected.
	Off	—	Device is powered off. or DSL WAN mode is selected.
Right Side			
WLAN	Green	Solid	WLAN enabled.
		Flashing	Indicates WLAN activity (traffic in either direction).
	Off	—	Device is powered off. or WLAN is disabled.
Power	Green	Solid	On—The device is powered on.
	Off	—	Device is powered off.

Cisco 880 Series ISRs

The Cisco 880 series ISRs have data and voice capabilities. They have the following features:

- Integrated 4-port 10/100 Ethernet switch for connecting to the LAN
- 10/100 FE, VDSLoPOTS, ADSL over POTS, ADSL over ISDN, DSL Multi-mode (VDSL/ADSLoPOTS, VDSL/ADSLoISDN Cisco VA models only), or G.SHDSL port for connecting to the WAN
- Optional embedded Wi-Fi CERTIFIED™, 802.11b/g/n-compliant wireless AP
- Optional 2-port Power over Ethernet (PoE)

Note The Cisco 880 series ISRs can include an optional PoE module that provides power to 802.3af-compliant devices connected to ethernet ports 0 and 1. If this feature was not configured with the factory order, you must order and install it to enable the PoE function.

- DIMM expansion socket that can accept up to 512 MB of additional memory, for a total of 768 MB system memory

The following features are located on the front panel:

- USB 1.1 port
- Express card slot for third-generation (3G) cellular data WAN connectivity, available only on the Cisco 880G models

This section contains the following topics:

- Cisco 880 Series Data Routers, page 1-54
- Cisco 880 Series Voice and Data Routers, page 1-57
- Cisco 880 Series with Embedded WLAN Antennas, page 1-63
- C881G-B/S/V-K9 ISRs, page 1-65
- C881GW-S/V-A-K9 ISRs, page 1-65
- C881G-U-K9 ISRs, page 1-66
- HSPA+ Versions of the Fixed-Platform ISRs, page 1-66

Cisco 880 Series Data Routers

The Cisco 880 series data routers provide integrated VPN, embedded Wi-Fi CERTIFIED™, 802.11b/g/n-compliant wireless AP, 3G, and backup capabilities. Figure 1-22 through Figure 1-25 show the features available on Cisco 880 series data routers. Some of the features shown may not be available on your router.

Depending on the router model, the primary WAN port can be G.SHDSL, VDSLoPOTS, VDSL/ADSL over ISDN, VDSL/ADSL over POTS, or 10/100 FE. See the *Cisco 880 Series Integrated Services Routers* data sheet for the WAN interface that is supported on your router.

Figure 1-22 shows the front panel details of the Cisco 880 wireless data router. The USB port and the 3G card slot are located on the front panel.

Figure 1-22 Front Panel of the Cisco 880 Series Wireless Data Router

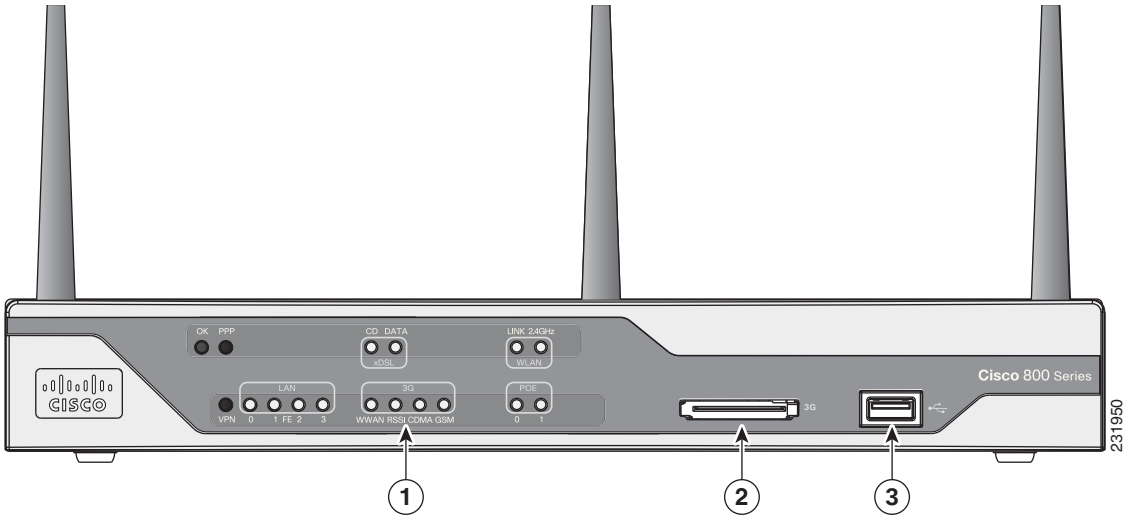

1	LEDs	**3**	USB port
2	3G express card slot—Supports third-party[1] 3G card (Cisco 880G models only)		

1. See the *Cisco 880 Series Integrated Services Routers* data sheet for supported vendors.

Figure 1-23 shows the back panel details of the Cisco 886VA data router.

Figure 1-23 Back Panel of the Cisco 886VA Router

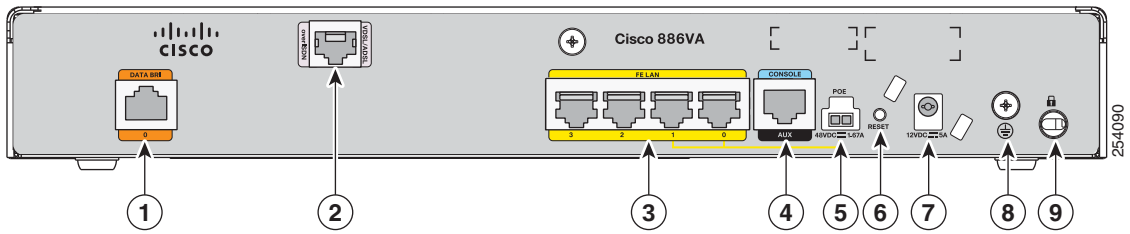

1	Data BRI[1] 0	**6**	Reset button
2	Primary WAN port—VDSL/ADSL over ISDN	**7**	Power connector
3	4-port 10/100 Ethernet switch[2]	**8**	Earth ground connection
4	Serial port—console or auxiliary	**9**	Kensington security slot
5	PoE power connector—optional		

1. BRI = Basic rate interface.
2. Ports 0 and 1 provide PoE with the optional PoE module installed.

The primary WAN port is designed for an RJ-45 connector only. Damage to the primary WAN port may occur if a non-RJ-45 connector is inserted.

Figure 1-24 shows the back panel details of the Cisco 887VA and 886VA-M data router.

Figure 1-24 Back Panel of the Cisco 887VA and 887VA-M Router

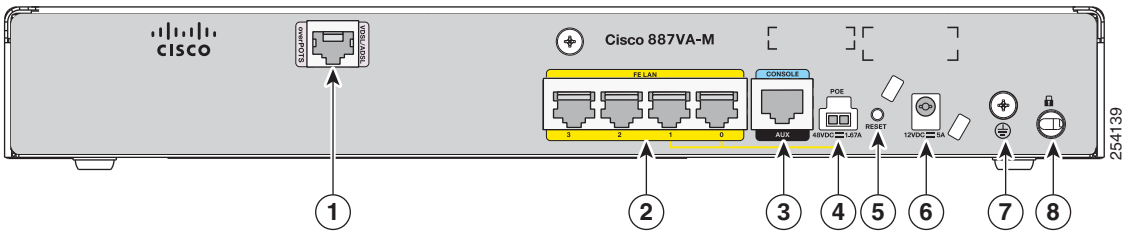

1	Primary WAN port—VDSL/ADSL over POTS[1]	**5**	Reset button
2	4-port 10/100 Ethernet switch[2]	**6**	Power connector
3	Serial port—console or auxiliary	**7**	Earth ground connection
4	PoE power connector—optional	**8**	Kensington security slot

1. 887VA-M has Annex M support.
2. Ports 0 and 1 provide PoE with the optional PoE module installed.

For the Cisco 887VA, the primary WAN port is designed for an RJ-11 connector only. Damage to the primary WAN port may occur if a non-RJ-11 connector is inserted.

Figure 1-25 shows the back panel details of the Cisco 888W data router. Nonwireless routers do not have antennas on the back panel. However, the feature locations are similar across all Cisco 880 series data routers.

Figure 1-25 Back Panel of the Cisco 888W Data Router

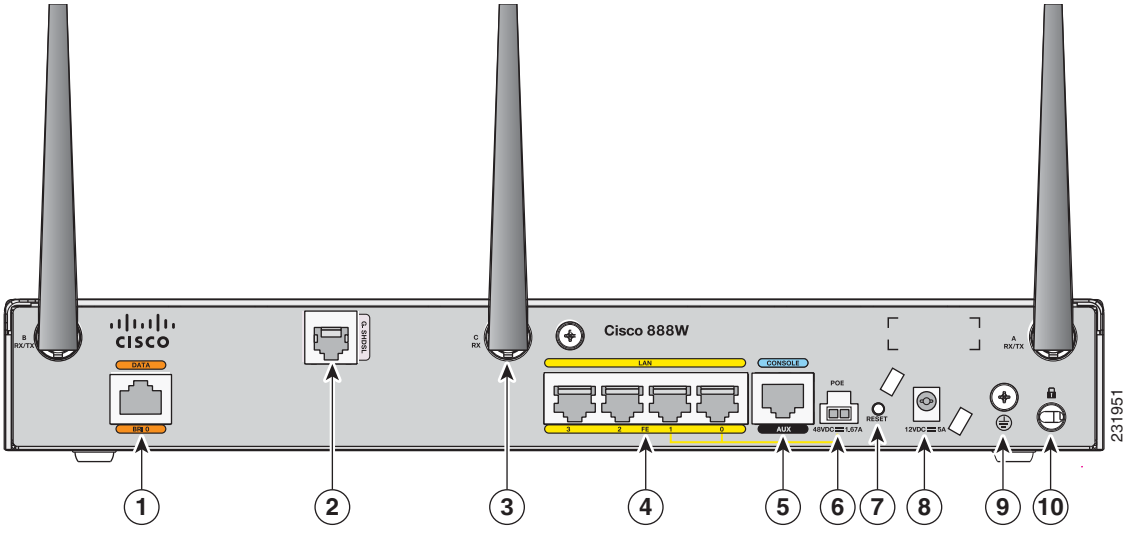

1	ISDN port—not available on 3G models	**6**	PoE power connector for optional PoE module[1]
2	Primary WAN port[2]—G.SHDSL, VDSLoPOTS, ADSLoPOTS, ADSLoISDN, or 10/100 FE	**7**	Reset button
3	Antenna—captive omnidirectional dipole WLAN antenna (wireless models only)	**8**	Power connector
4	4-port 10/100 Ethernet switch	**9**	Earth ground connection
5	Serial port—console or auxiliary	**10**	Kensington security slot

1. The Cisco 880 series ISRs can include an optional PoE module that provides power to 802.3af-compliant devices connected to ethernet ports 0 and 1. If this feature was not configured with the factory order, you must order and install it to enable the PoE function.
2. Depending on the router model, the primary WAN port can be G.SHDSL, VDSLoPOTS, or 10/100 FE. The VDSLoPOTS port is in the same location as the G.SHDSL port. The 10/100 FE WAN port is located at the bottom left corner. See Figure 1-12 for the location of the 10/100 FE WAN port.

Cisco 880 Series Voice and Data Routers

The Cisco 880 series voice and data routers provide both voice and data ports. The voice ports managed voice services that interface with Foreign Exchange Station (FXS), Foreign Exchange Office (FXO), or BRI connections.

Cisco 881 SRST and Cisco 888 SRST

Figure 1-26, Figure 1-27, and Figure 1-28 show the features available on the Cisco 881 SRST and Cisco 888 SRST routers. The features available vary, depending on the router model. Some features may not be available on your router.

Depending on the router model, the primary WAN port can be either G.SHDSL or 10/100 FE. See the *Cisco 880 Series Integrated Services Routers* data sheet for the WAN interface and voice ports that are supported on your router.

Figure 1-26 shows the front panel details of the Cisco 881 SRST and Cisco 888 SRST wireless voice router.

Figure 1-26 Front Panel of the Cisco 881 SRST and Cisco 888 SRST Wireless Voice Router

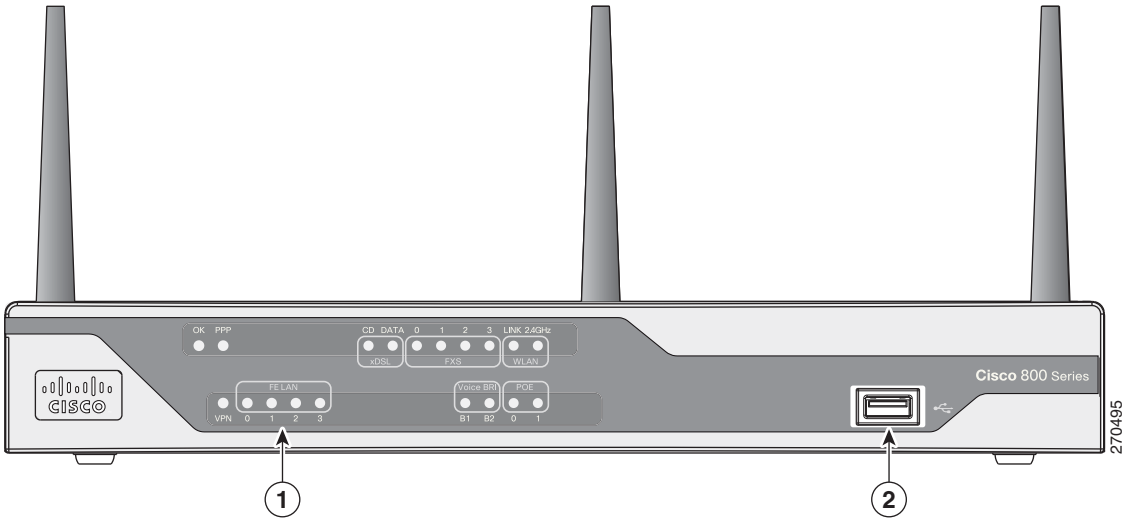

1	LEDs	**2**	USB port

Figure 1-27 shows the back panel details of the Cisco 881SRST-W voice router.

Figure 1-27 Back Panel of the Cisco C881SRST-W Voice Router

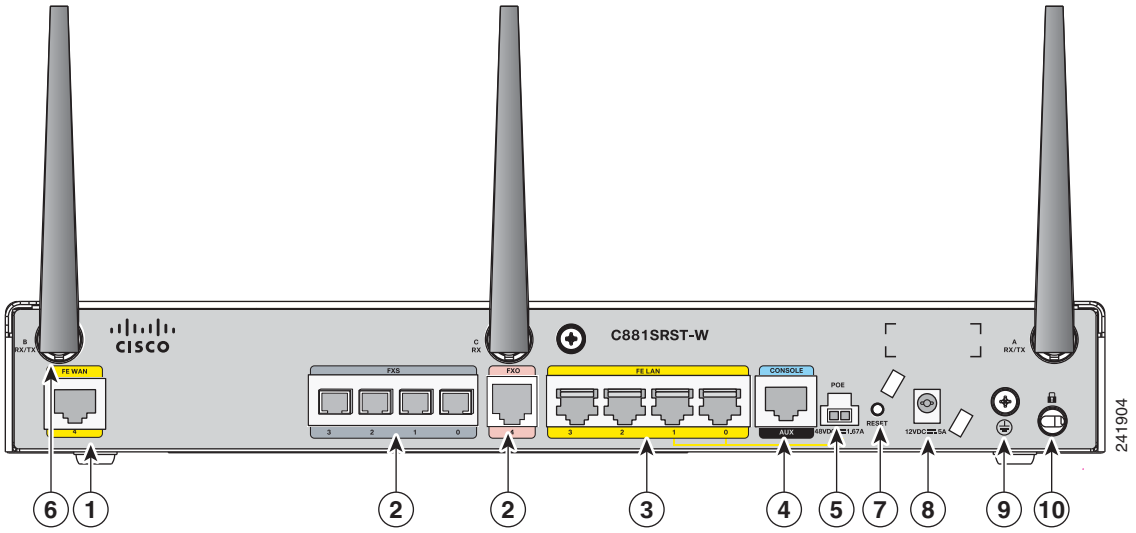

1	Primary WAN port[1]—10/100 FE	**6**	Antenna—captive wireless omnidirectional dipole WLAN antenna (wireless models only)
2	Voice ports—four FXS[2]/DID[3] ports, one FXO[4] port with TBP[5] power failover	**7**	Reset button
3	4-port 10/100 Ethernet switch[6]	**8**	Power connector
4	Serial port—console or auxiliary	**9**	Earth ground connection
5	PoE power connector for optional PoE module[7]	**10**	Kensington security slot

1. Depending on the router model, the primary WAN port can be either G.SHDL or 10/100 FE.
2. FXS = Foreign Exchange Station.
3. DID = Direct Inward Dialing.
4. FXO = Foreign Exchange Office.
5. TBP = trunk bypass.
6. Ports 0 and 1 provide PoE with the optional PoE module installed.
7. The Cisco 880 series ISRs can include an optional PoE module that provides power to 802.3af-compliant devices connected to ethernet ports 0 and 1. If this feature was not configured with the factory order, you must order and install the Field Replaceable Unit (FRU) to enable the PoE function. For this you either need the FRU “800-IL-PM=2” or “800G2-POE-2”. If your device has a separate PoE inlet, use the 800-IL-PM=2, if it has one combined inlet (a description saying “POE OPTION REQUIRES 5A POWER ADAPTOR”), then use the 800G2-POE-2.

Figure 1-28 shows the back panel details of the Cisco 888SRST-W voice router.

Figure 1-28 Back Panel of the Cisco C888SRST-W Voice Router

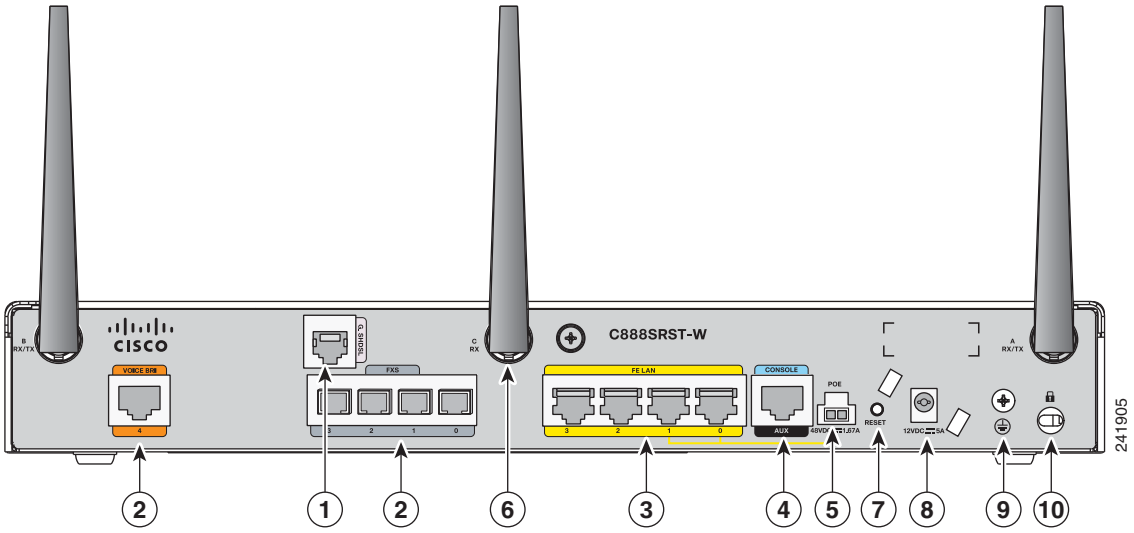

1	Primary WAN port[1]—G.SHDSL	**6**	Antenna—captive wireless omnidirectional dipole WLAN antenna (wireless models only)
2	Voice ports—four FXS/DIDports and one voice BRI port	**7**	Reset button
3	4-port 10/100 Ethernet switch[2]	**8**	Power connector
4	Serial port—console or auxiliary	**9**	Earth ground connection
5	PoE power connector for optional PoE module[3]	**10**	Kensington security slot

1. Depending on the router model, the primary WAN port can be either G.SHDL or 10/100 FE.
2. Ports 0 and 1 provide PoE with the optional PoE module installed.
3. The Cisco 880 series ISRs can include an optional PoE module that provides power to 802.3af-compliant devices connected to ethernet ports 0 and 1. If this feature was not configured with the factory order, you must order and install the Field Replaceable Unit (FRU) to enable the PoE function. For this you either need the FRU “800-IL-PM=2” or “800G2-POE-2”. If your device has a separate PoE inlet, use the 800-IL-PM=2, if it has one combined inlet (a description saying “POE OPTION REQUIRES 5A POWER ADAPTOR”), then use the 800G2-POE-2.

The primary WAN port on all 888E models is designed for an RJ-45 connector only. Damage to the primary WAN port may occur if a non-RJ-45 connector is inserted.

Cisco 881-V, Cisco 887VA-V, and Cisco 887VA-V-W

Figure 1-29, Figure 1-30, and Figure 1-31 show the features available on the Cisco 881-V and Cisco 887VA-V routers. The features available vary, depending on the router model. Some features may not be available on your router.

The Cisco 881-V and Cisco 887VA-V voice and data series gives you the flexibility to use either FXS or BRI voice ports. However, the number of concurrent calls that can be supported by the router is limited by the codec complexity setting on the router. Table 1-28 lists the maximum number of calls that is supported when the **codec complexity** command is configured for Flexible, Medium or High complexity.

Note Configuring the codec complexity setting to support secure calls uses DSP resources, but does not affect the maximum number of supported calls.

Table 1-28 Maximum Number of Supported Calls

	Flexible Complexity	Medium Complexity	High Complexity
C881-V	9	8	6
C887VA-V	8	8	6
C887VA-V-W	8	8	6

Figure 1-29 shows the front panel details of the Cisco 881-V, Cisco 887VA-V, and Cisco 887VA-V-W.

Figure 1-29 Front Panel of the Cisco 881-V, Cisco 887VA-V, and Cisco 887VA-V-W Routers

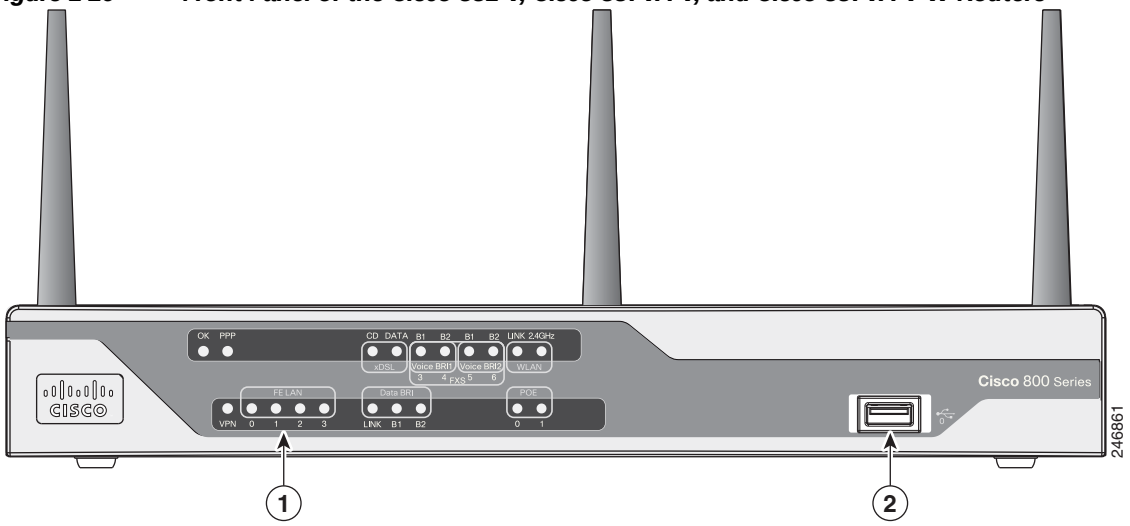

1	LEDs	**2**	USB port

Figure 1-30 shows the back panel for the Cisco 887VA-V-W router. The Cisco 887VA-V (non-wireless) router does not have the antennas on the back panel.

Figure 1-30 Back Panel of the Cisco 887 VA-V Router

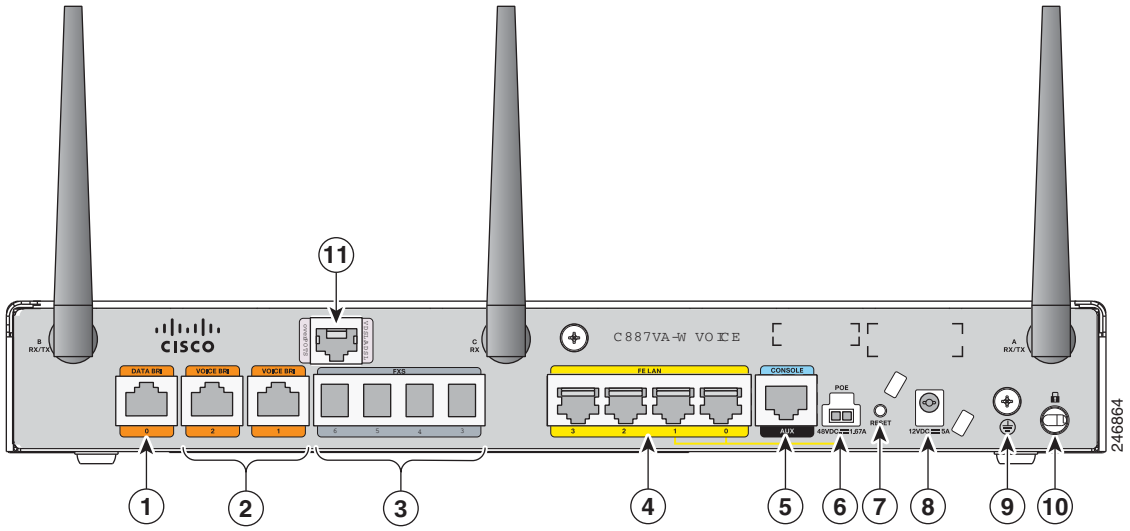

1	Data BRI	**7**	Reset Button
2	Voice BRI	**8**	Power connector
3	Voice ports—four FXS/DID ports	**9**	Earth ground connection
4	Fast Ethernet LAN—four ports	**10**	Kensington security slot
5	Console Port	**11**	Primary WAN port—VDSL/ADSL over POTS
6	PoE power connector (optional)		

Figure 1-31 shows the back panel for the Cisco 881-V router.

Figure 1-31 Back Panel of the Cisco 881-V Router

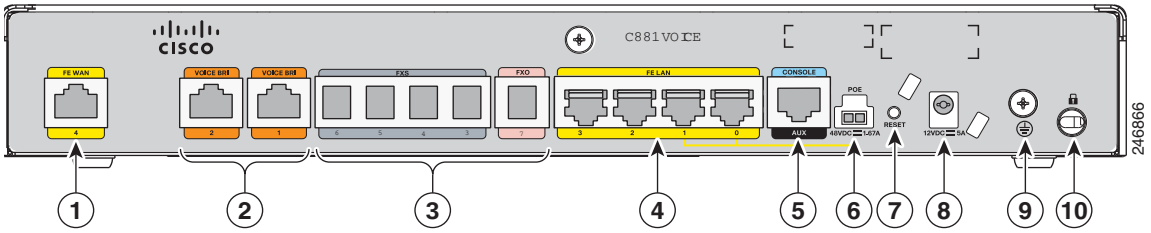

1	Fast Ethernet WAN port	6	PoE power connector (optional)
2	Voice BRI ports	7	Reset button
3	Voice ports—four FXS/DID ports and one FXO port.	8	Power connector
4	Fast Ethernet LAN—four ports	9	Earth ground connection
5	Console Port	10	Kensington security slot

Cisco 880 Series with Embedded WLAN Antennas

Some Cisco 880W, 880WD, and 880-WD ISRs have three embedded WLAN antennas.

These ISRs are fixed-platform routers that:

- Provide integrated VPN, embedded Wi-Fi CERTIFIED™, 802.11b/g/n-compliant wireless AP, and backup capabilities.
- Use single-band (2.4 GHz) WLAN cards or dual-band (2.4 GHz and 5 GHz) WLAN cards.
- Require a single external power supply: a 30-W power supply for non-POE-enabled routers or a 60-W power supply for POE-enabled routers.
- Have a fixed 512 MB of system memory.

For information on configuring the Cisco 880 series ISRs, see *Cisco 880 Series Integrated Services Router Software Configuration Guide*.

Cisco 887VA-WD

Figure 1-32 shows the front panel details of the C887VA-WD-A-K9 and C887VA-WD-E-K9 ISRs. The front panel has LEDs only. All the ports are in the back panel.

Figure 1-32 Front Panel of the C887VA-WD-A-K9 and C887VA-WD-E-K9 ISRs

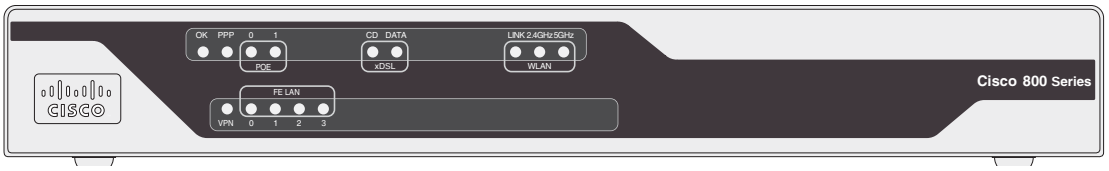

Figure 1-33 shows the back panel details of the C887VA-WD-A-K9 and C887VA-WD-E-K9 ISRs.

Figure 1-33 Back Panel of the C887VA-WD-A-K9 and C887VA-WD-E-K9 ISRs

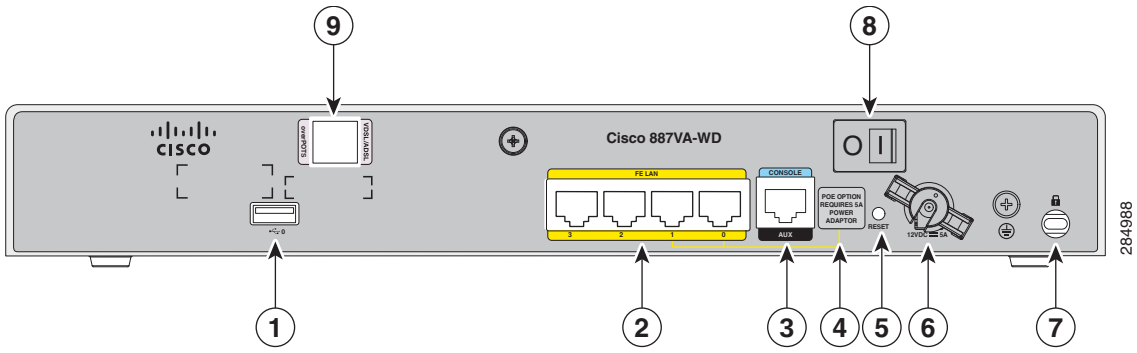

1	USB port	**6**	Power connector
2	4-port 10/100 Ethernet switch	**7**	Kensington security slot
3	Serial port—console or auxiliary	**8**	Power switch
4	**Note** No separate PoE power supply is required for routers with embedded WLAN antennas. For information on system power supply requirements when PoE is enabled, see the "Power over Ethernet Module" section on page 1-143.	**9**	VDSL/ADSL port
5	Reset button		

C881WD

Figure 1-34 shows the front panel details of the C881WD-A-K9 and C881WD-E-K9 ISRs. The front panel has LEDs only. All the ports are in the back panel.

Figure 1-34 Front Panel of the C881WD-A-K9 and C881WD-E-K9 ISRs

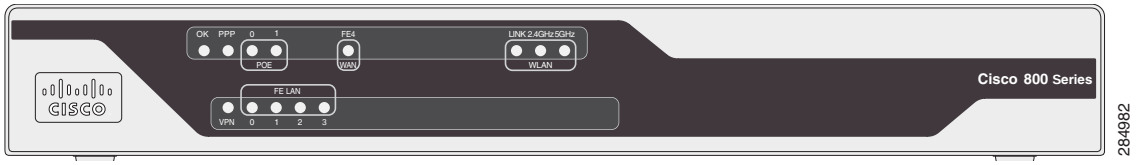

Figure 1-35 shows the back panel details of the C881WD-A-K9 and C881WD-E-K9 ISRs.

Figure 1-35 Back Panel of the C881WD-A-K9 and C881WD-E-K9 ISRs

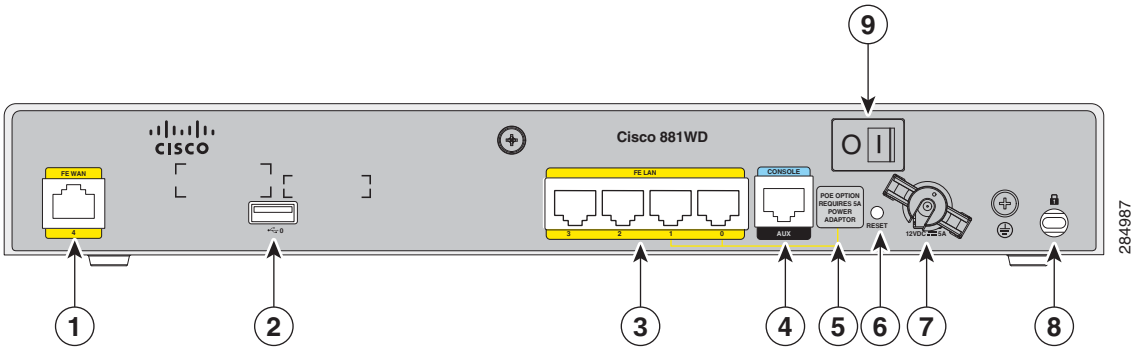

1	Primary WAN port—10/100 FE	**6**	Reset button
2	USB port	**7**	Power connector
3	4-port 10/100 Ethernet switch	**8**	Kensington security slot
4	Serial port—console or auxiliary	**9**	Power switch
5	**Note** No separate PoE power supply is required for routers with embedded WLAN antennas. For information on system power supply requirements when PoE is enabled, see the "Power over Ethernet Module" section on page 1-143.		

C881G-B/S/V-K9 ISRs

The C881G-B-K9, C881G-S-K9, and C881G-V-K9 ISRs are members of the Cisco 880 series data routers. These routers provide integrated Virtual Private Network (VPN), 802.11b/g/n-compliant wireless Access Point (AP), 3G, and backup capabilities.

For information on configuring Cisco 880 Series ISRs, see *Cisco 880 Series Integrated Services Router Software Configuration Guide*.

C881GW-S/V-A-K9 ISRs

The C881GW-S-A-K9 and C881GW-V-A-K9 ISRs are members of the Cisco 880G series data routers. These routers provide integrated VPN, embedded Wi-Fi CERTIFIED™, 802.11b/g/n-compliant wireless AP, 3G, and backup capabilities.

For information on configuring Cisco 880 Series ISRs, see *Cisco 880 Series Integrated Services Router Software Configuration Guide*.

C881G-U-K9 ISRs

The C881G-U-K9 ISR is a member of the Cisco 880 series data routers. These routers provide integrated Virtual Private Network (VPN), embedded Wi-Fi CERTIFIED™, 802.11b/g/n-compliant wireless Access Point (AP), 3G, and backup capabilities.

For information on configuring Cisco 880 Series ISRs, see *Cisco 880 Series Integrated Services Router Software Configuration Guide*.

HSPA+ Versions of the Fixed-Platform ISRs

The C881G+7-K9, C886VAG+7-K9, C887VAG+7-K9, C887VAMG+7-K9, C888EG+7-K9, C881GW+7-A-K9, C881GW+7-E-K9, C887VAGW+7-A-K9, and C887VAGW+7-E-K9 ISRs are members of the Cisco 880G series data routers. These routers provide integrated VPN, embedded Wi-Fi CERTIFIED™, 802.11b/g/n-compliant wireless AP, 3G, and backup capabilities.

For information on configuring Cisco 880 Series ISRs, see *Cisco 880 Series Integrated Services Router Software Configuration Guide*.

Cisco C881, C886, and C887 Series ISRs

Cisco C881, C886, and C887 Series ISRs offer broadband speed and simplified management to small businesses, small enterprise branches, and teleworkers. The Cisco C881, C886, and C887 Series ISR models have a lead-free, fanless chassis and are updated versions of the previous Cisco 881, 886, and 887 series (excluding 3G and wireless models).

Information provided in this section is applicable for the following models:

- Cisco C881
- Cisco C886VA, Cisco C886VAJ (Annex J)
- Cisco C887VA, Cisco C887VAM (Annex M)

Table 1-29 provides information about important hardware specifications pertaining to Cisco C881, C886, and C887 Series Routers.

Table 1-29 Hardware Specifications of Cisco C881, C886, and C887 Series Routers

Hardware	Description
Flash Memory	256 MB
Main Memory	1 GB DDR RAM; fixed and not extendable
USB port	A USB 2.0-compliant port located at the back panel
FAN	Fanless chassis
PoE	Two internal PoE ports
WAN	• C881— FE • C886—VDSL/ADSL over ISDN with ISDN back up • C887—VDSL/ADSL over POTS

Hardware	Description
Console or auxiliary port	RJ-45
LAN switch	4-port 10/100BASE-T

For detailed hardware specifications, see the Cisco 880 Series hardware data sheet at:

http://www.cisco.com/en/US/prod/collateral/routers/ps380/data_sheet_c78_459542_ps380_Products_Data_Sheet.html

Cisco C881 Router

Figure 1-36 shows the front panel of the Cisco C881 Router.

Figure 1-36 Front Panel of the Cisco C881 Router

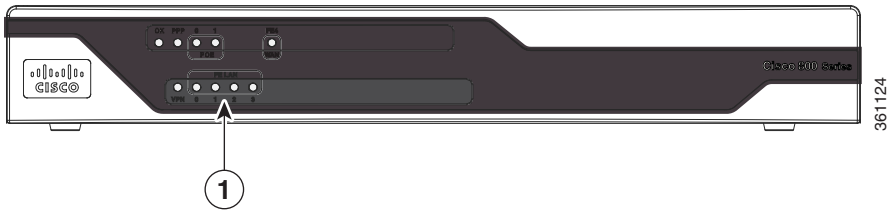

1	LEDs		

For detailed description about the LEDs on the Cisco C880 Series Routers, see the "LEDs" section on page 1-30.

Figure 1-37 shows the back panel of the Cisco C881 Router.

Figure 1-37 Back Panel of the Cisco C881 Router

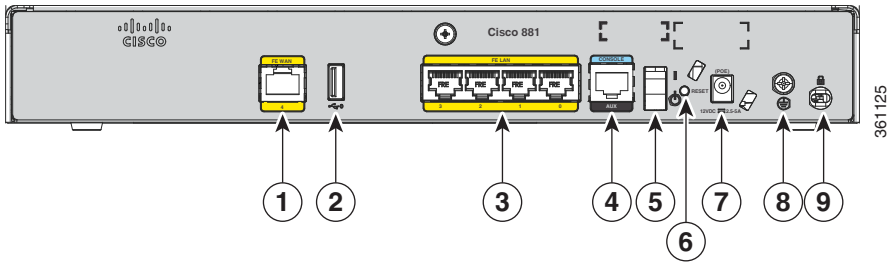

1	Primary WAN port—FE	**6**	Reset button
2	USB port	**7**	Power connector
3	4-port 10/100 Ethernet switch	**8**	Earth ground connection
4	Serial port—Console or auxiliary	**9**	Kensington security slot
5	On/Off switch		

For information on installing the Cisco C880 Series Routers, see :

http://www.cisco.com/en/US/docs/routers/access/800/860-880-890/hardware/installation/guide/2Install880-860.html

Cisco C886VA Router

Figure 1-38 shows the front panel of the Cisco C886VA Router.

Figure 1-38 Front Panel of the Cisco C886VA Router

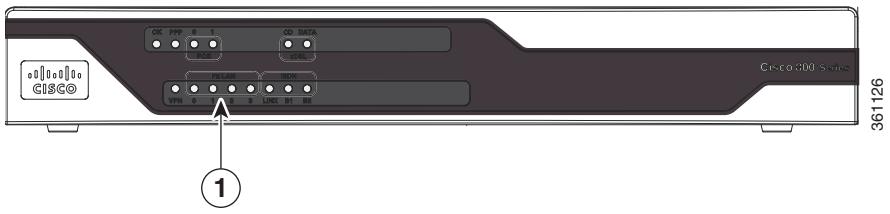

1	LEDs		

For detailed description about the LEDs on the Cisco C880 Series Routers, see the "LEDs" section on page 1-30.

Figure 1-39 shows the back panel of the Cisco C886VA Router.

Figure 1-39 Back Panel of the Cisco C886VA Router

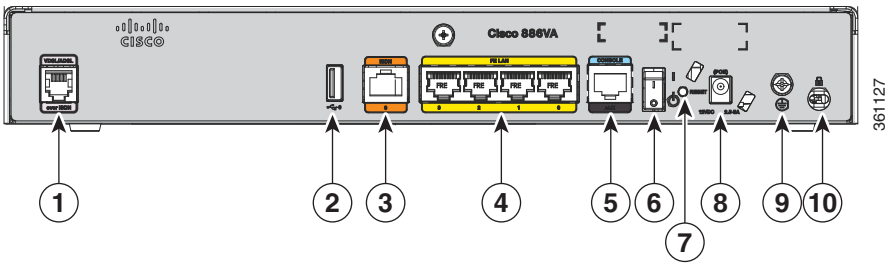

1	Primary WAN port—VDSL/ADSL over ISDN	**6**	On/Off switch
2	USB port	**7**	Reset button
3	ISDN	**8**	Power connector
4	4-port 10/100 Ethernet switch	**9**	Earth ground connection
5	Serial port—Console or auxiliary	**10**	Kensington security slot

For information on installing Cisco C880 Series Routers, see:

http://www.cisco.com/en/US/docs/routers/access/800/860-880-890/hardware/installation/guide/2Install880-860.html

Cisco C886VAJ Router

Figure 1-40 shows the front panel of the Cisco C886VAJ Router.

Figure 1-40 Front Panel of the Cisco C886VAJ Router

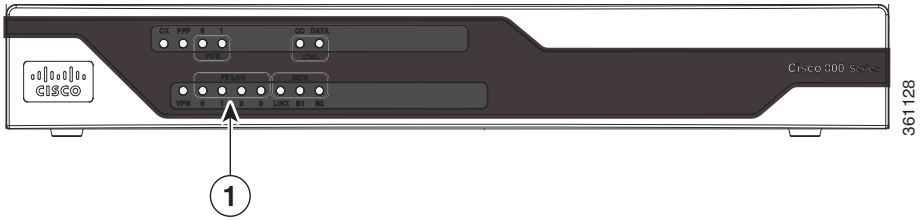

1	LEDs		

For detailed description about LEDs on the Cisco 880 Series Router, see the "LEDs" section on page 1-30.

Figure 1-41 shows the back panel of the Cisco C886VAJ Router.

Figure 1-41 Back Panel of the Cisco C886VAJ Router

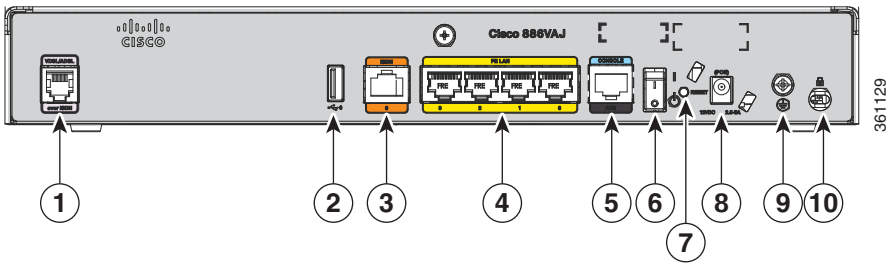

1	Primary WAN port—VDSL/ADSL over ISDN	**6**	On/Off switch
2	USB port	**7**	Reset button
3	ISDN	**8**	Power connector
4	4-port 10/100 Ethernet switch	**9**	Earth ground connection
5	Serial port—Console or auxiliary	**10**	Kensington security slot

For information on installing Cisco C880 Series Routers, see:

http://www.cisco.com/en/US/docs/routers/access/800/860-880-890/hardware/installation/guide/2Install880-860.html

Cisco C887VA Router

Figure 1-42 shows the front panel of the Cisco C887VA Router.

Figure 1-42 Front Panel of the Cisco C887VA Router

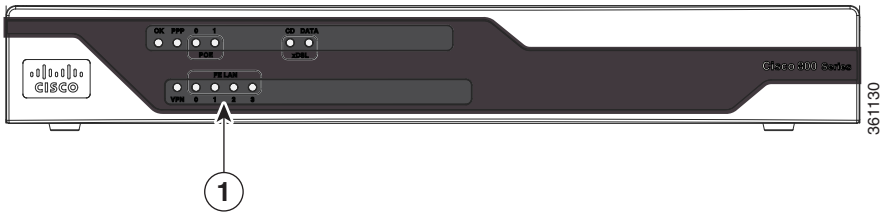

1	LEDs		

For detailed description about the LEDs on Cisco C880 Series Router, see the "LEDs" section on page 1-30.

Figure 1-43 shows the back panel of the Cisco C887VA Router.

Figure 1-43 Back Panel of the Cisco C887VA Router

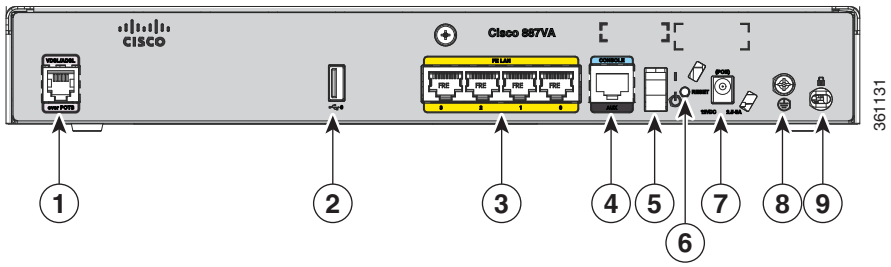

1	Primary WAN port—VDSL/ADSL over POTS	**6**	Reset button
2	USB port	**7**	Power connector
3	4-port 10/100 Ethernet switch	**8**	Earth ground connection
4	Serial port—console or auxiliary	**9**	Kensington security slot
5	On/Off switch		

For information on installing Cisco C880 series routers, see the following link:

http://www.cisco.com/en/US/docs/routers/access/800/860-880-890/hardware/installation/guide/2Install880-860.html

Cisco C887VAM Router

Figure 1-44 shows the front panel of the Cisco C887VAM router:

Figure 1-44 Front Panel of the Cisco C887VAM Router

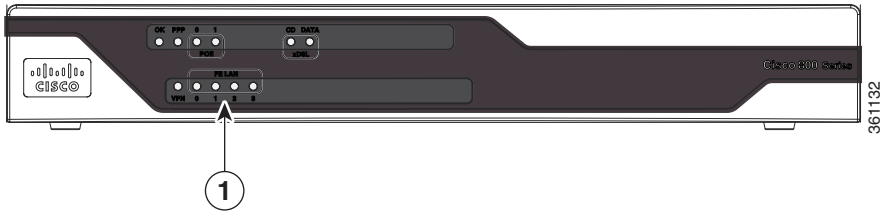

1	LEDs		

For detailed description about LEDs on Cisco C880 series router, see “LEDs” section on page 1-30.

Figure 1-45 shows the back panel of the Cisco C887VAM router.

Figure 1-45 Back Panel of the Cisco C887VAM Router

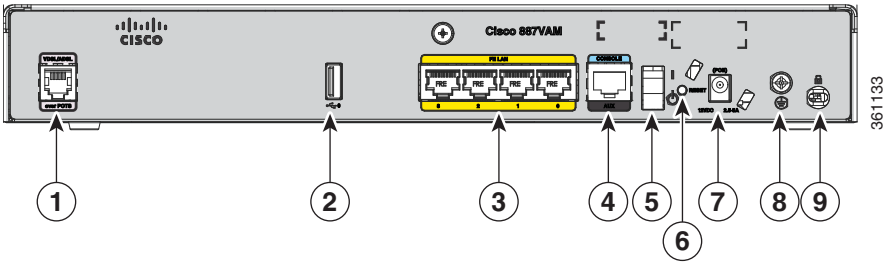

1	Primary WAN port—VDSL/ADSL over POTS	**6**	Reset button
2	USB port	**7**	Power connector
3	4-port 10/100 Ethernet switch	**8**	Earth ground connection
4	Serial port—Console or auxiliary	**9**	Kensington security slot
5	On/Off switch		

For information on installing the Cisco C880 Series Routers, see:

http://www.cisco.com/en/US/docs/routers/access/800/860-880-890/hardware/installation/guide/2Install880-860.html

Cisco C888 Integrated Services Router

The Cisco C888 Integrated Services Router (ISR) offers broadband speeds and simplified management to small businesses, enterprise small branches, and teleworkers. The Cisco C888 ISR supports multi mode G.SHDSL (EFM+ATM) WAN connectivity. The Cisco C888 ISR has a lead free, fanless chassis and it is an updated version of the previous Cisco 888 (888 A and 888 EA) ISR models.

Table 1-30 provides information about important hardware specifications pertaining to the Cisco C888 ISR.

Table 1-30 Hardware Specifications for Cisco C888 ISR

Hardware	Description
Flash Memory	256 MB
Main Memory	1-GB DDR RAM ; fixed, and not extendable
USB port	A USB 2.0-compliant port located at the back panel
FAN	Fanless chassis.
PoE	Two internal PoE ports
WAN	4-pair multimode G.SHDSL (EFM+ATM) with ISDN backup.
Console or auxiliary port	RJ-45
LAN switch	4-port 10/100BASE-T

Note If you change G.SHDSL mode from EFM to ATM or from ATM to EFM, you should reload the router.

Note EFM auto mode is supported only on the first pair. EFM manual mode can be supported on all the 4 pairs.

Note Cisco C888 ISR does not support Inverse Multiplexing over ATM (IMA) mode.

For detailed hardware specifications, see the Cisco 880 Series hardware data sheet at:

http://www.cisco.com/en/US/prod/collateral/routers/ps380/data_sheet_c78_459542_ps380_Products_Data_Sheet.html

Figure 1-46 shows the front panel of the Cisco C888 Router:

Figure 1-46 Front Panel of the Cisco C888 Router

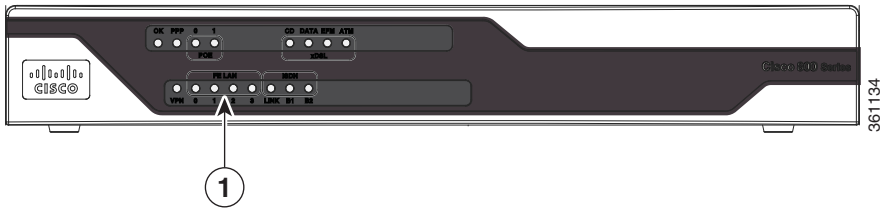

1	LEDs		

For detailed description about the LEDs on the Cisco 880 Series Routers, see information available at:

http://www.cisco.com/en/US/docs/routers/access/800/860-880-890/hardware/installation/guide/1Overview880-860.html#wp1147924

Figure 1-47 shows the back panel of the Cisco C888 Router.

Figure 1-47 Back Panel of the Cisco C888 Router

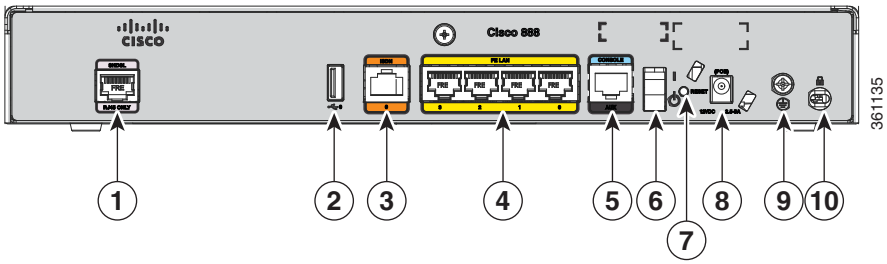

1	Primary WAN port—G.SHDSL	**6**	On/Off switch
2	USB port	**7**	Reset button
3	ISDN	**8**	Power connector
4	4-port 10/100 Ethernet switch	**9**	Earth ground connection
5	Serial port—console or auxiliary	**10**	Kensington security slot

For information on installing Cisco 800 Series Routers, see the information available at:

http://www.cisco.com/c/en/us/td/docs/routers/access/800/hardware/installation/guide/800HIG/installing.html#pgfId-1098019

Cisco C880 Series and Cisco C890 Series 4G LTE Integrated Services Routers

Cisco C880 Series and Cisco C890 Series 4G LTE Integrated Services Routers (ISRs) extend 4G LTE support to the existing Cisco 880 Series and Cisco 890 Series ISRs. The Cisco C880 Series and Cisco C890 Series 4G LTE ISRs are based on the Sierra Wireless MC7304 modem and Cisco C880 Series and Cisco C890 4G LTE Series ISRs can support higher data rates compared to 3G in both up link and down link directions with 4G LTE support.

This section provides information about the following models:

- Cisco C881G-4G ISR
- Cisco C887VAG-4G ISR
- Cisco C896VAG-LTE ISR
- Cisco C897VAG-LTE ISR
- Cisco C898EAG-LTE ISR
- Cisco C899G-LTE ISR

Table 1-31 provides information about important hardware specifications pertaining to Cisco C880 4G LTE Series ISRs.

Table 1-31 Hardware Specifications for Cisco C880 4G LTE Series ISRs

Hardware	Description
Flash Memory	1GB
Main Memory	1-GB DDR RAM
USB port	A USB 2.0-compliant port located at the back panel
PoE	Two PoE ports
WAN	• C881G-4G— FE • C887VAG-4G—VDSL or ADSL over POTS
Console or auxiliary port	RJ-45
LAN switch	4-port 10/100BASE-T

Table 1-32 provides information about important hardware specifications pertaining to Cisco C890 4G LTE Series ISRs.

Table 1-32 Hardware Specifications for Cisco C890 4G LTE Series ISRs

Hardware	Description
Flash Memory	1 GB
Main Memory	1-GB DRAM
USB port	A USB 2.0-compliant port located at the back panel.
PoE	Four PoE ports

Table 1-32 Hardware Specifications for Cisco C890 4G LTE Series ISRs

Hardware	Description
WAN	• C896VAG-LTE—VDSL or ADSL over ISDN, GE • C897VAG-LTE—VDSL or ADSL over POTS, GE • C898EAG-LTE—G.SHDSL over POTS, GE • C899G-LTE—GE, SFP
Console or auxiliary port	RJ-45
LAN switch	8-port 10/100/1000 BASE-T

Table 1-33 lists the different 4G LTE SKUs available for the Cisco 880 and Cisco 890 series ISRs.

Table 1-33 Supported 4G LTE SKUs for the Cisco 880 and Cisco 890 Series ISRs

SKU ID	Mode	Operating Region	Frequency Band	Description
C881G-4G-GA-K9	• LTE • HSPA+ • HSPA • UMTS • EDGE • GPRS	Global (Europe, New Zealand, and Australia)	LTE: • 800 MHz (band 20) • 900 MHz (band 8) • 1800 MHz (band 3) • 2100 MHz (band 1) • 2600 MHz (band 7) 3G (UMTS, HSPA+, HSPA): • 800 MHz (band 6) • 850 MHz (band 5) • 900 MHz (band 8) • 1900 MHz (band 2) • 2100 MHz (band 1) 2G (GSM, EDGE, GPRS): • 850 MHz • 900 MHz • 1800 MHz • 1900 MHz	Cisco 880 Series ISR Multimode LTE feature for global wireless networks. C881G-4G-GA-K9 comes with a Sierra Wireless MC7304 modem.
C886VAG-LTE-GA-K9	• LTE • HSPA+ • HSPA • UMTS • EDGE • GPRS	Global (Europe, New Zealand, and Australia)	LTE: • 800 MHz (band 20) • 900 MHz (band 8) • 1800 MHz (band 3) • 2100 MHz (band 1) • 2600 MHz (band 7) 3G (UMTS, HSPA+, HSPA): • 800 MHz (band 6) • 850 MHz (band 5) • 900 MHz (band 8) • 1900 MHz (band 2) • 2100 MHz (band 1) 2G (GSM, EDGE, GPRS): • 850 MHz • 900 MHz • 1800 MHz • 1900 MHz	Cisco 880 series ISR with Multimode LTE feature for global wireless networks. C886VAG-LTE-GA-K9 comes with a Sierra Wireless MC7304 modem.

Table 1-33 Supported 4G LTE SKUs for the Cisco 880 and Cisco 890 Series ISRs (continued)

SKU ID	Mode	Operating Region	Frequency Band	Description
C887VAG-4G-GA-K9	• LTE • HSPA+ • HSPA • UMTS • EDGE • GPRS	Global (Europe, New Zealand, and Australia)	LTE: • 800 MHz (band 20) • 900 MHz (band 8) • 1800 MHz (band 3) • 2100 MHz (band 1) • 2600 MHz (band 7) 3G (UMTS, HSPA+, HSPA): • 800 MHz (band 6) • 850 MHz (band 5) • 900 MHz (band 8) • 1900 MHz (band 2) • 2100 MHz (band 1) 2G (GSM, EDGE, GPRS): • 850 MHz • 900 MHz • 1800 MHz • 1900 MHz	Cisco 880 series ISR with Multimode LTE feature for global wireless networks. C887VAG-4G-GA-K9 comes with a Sierra Wireless MC7304 modem.
C896VAG-LTE-GA-K9	• LTE • HSPA+ • HSPA • UMTS • EDGE • GPRS	Global (Europe, New Zealand, and Australia)	LTE: • 800 MHz (band 20) • 900 MHz (band 8) • 1800 MHz (band 3) • 2100 MHz (band 1) • 2600 MHz (band 7) 3G (UMTS, HSPA+, HSPA): • 800 MHz (band 6) • 850 MHz (band 5) • 900 MHz (band 8) • 1900 MHz (band 2) • 2100 MHz (band 1) 2G (GSM, EDGE, GPRS): • 850 MHz • 900 MHz • 1800 MHz • 1900 MHz	Cisco 890 series ISR with Multimode LTE feature for global wireless networks. C896VAG-LTE-GA-K9 comes with a Sierra Wireless MC7304 modem.

Table 1-33 Supported 4G LTE SKUs for the Cisco 880 and Cisco 890 Series ISRs (continued)

SKU ID	Mode	Operating Region	Frequency Band	Description
C897VAG-LTE-GA-K9	• LTE • HSPA+ • HSPA • UMTS • EDGE • GPRS	Global (Europe, New Zealand, and Australia)	4G: • 800 MHz (band 20) • 900 MHz (band 8) • 1800 MHz (band 3) • 2100 MHz (band 1) • 2600 MHz (band 7) 3G (UMTS, HSPA+, HSPA): • 800 MHz (band 6) • 850 MHz (band 5) • 900 MHz (band 8) • 1900 MHz (band 2) • 2100 MHz (band 1) 2G (GSM, EDGE, GPRS): • 850 MHz • 900 MHz • 1800 MHz • 1900 MHz	Cisco 890 series ISR with Multimode LTE feature for global wireless networks. C897VAG-LTE-GA-K9 comes with a Sierra Wireless MC7304 modem.
C897VAMG-LTE-GA-K9	• LTE • HSPA+ • HSPA • UMTS • EDGE • GPRS	Global (Europe, New Zealand, and Australia)	LTE: • 800 MHz (band 20) • 900 MHz (band 8) • 1800 MHz (band 3) • 2100 MHz (band 1) • 2600 MHz (band 7) 3G (UMTS, HSPA+, HSPA): • 800 MHz (band 6) • 850 MHz (band 5) • 900 MHz (band 8) • 1900 MHz (band 2) • 2100 MHz (band 1) 2G (GSM, EDGE, GPRS): • 850 MHz • 900 MHz • 1800 MHz • 1900 MHz	Cisco 890 series ISR with Multimode LTE feature for global wireless networks. C897VAMG-LTE-GA-K9 comes with a Sierra Wireless MC7304 modem.

Table 1-33 Supported 4G LTE SKUs for the Cisco 880 and Cisco 890 Series ISRs (continued)

SKU ID	Mode	Operating Region	Frequency Band	Description
C897VAG-LTE-LA-K9	• LTE • HSPA+ • HSPA • UMTS	Latin America	For FDD LTE: • 700 MHz (band 28) • 850 MHz (band 5) • 800 MHz (band 19) • 800 MHz (band 18) • 900 MHz (band 8) • 1800 MHz (band 3) • 2100 MHz (band 1) • 2600 MHz (band 7) For TDD LTE: • 1900 MHz (Band 39) • 2300 MHz (Band 40) • 2500 MHz (Band 41) • 2600 MHz (Band 38) For UMTS, HSPA+, HSPA: • 800 MHz (band 6) • 800 MHz (band 19) • 850 MHz (band 5) • 900 MHz (band 8) • 1700 MHz (band 9) • 2100 MHz (band 1)	C897VAG-LTE-LA-K9 is a dedicated Multimode LTE SKU for Latin American wireless networks and comes with a Sierra Wireless MC7430 modem.

Table 1-33 Supported 4G LTE SKUs for the Cisco 880 and Cisco 890 Series ISRs (continued)

SKU ID	Mode	Operating Region	Frequency Band	Description
C898EAG-LTE-GA-K9	• LTE • HSPA+ • HSPA • UMTS • EDGE • GPRS	Global (Europe, New Zealand, and Australia)	LTE: • 800 MHz (band 20) • 900 MHz (band 8) • 1800 MHz (band 3) • 2100 MHz (band 1) • 2600 MHz (band 7) 3G (UMTS, HSPA+, HSPA): • 800 MHz (band 6) • 850 MHz (band 5) • 900 MHz (band 8) • 1900 MHz (band 2) • 2100 MHz (band 1) 2G (GSM, EDGE, GPRS): • 850 MHz • 900 MHz • 1800 MHz • 1900 MHz	Cisco 890 series ISR with Multimode LTE feature for global wireless networks. C898EAG-LTE-GA-K9 comes with a Sierra Wireless MC7304 modem.

Table 1-33 Supported 4G LTE SKUs for the Cisco 880 and Cisco 890 Series ISRs (continued)

SKU ID	Mode	Operating Region	Frequency Band	Description
C898EAG-LTE-LA-K9	• LTE • HSPA+ • HSPA • UMTS	ASEAN	For FDD LTE: • 700 MHz (band 28) • 850 MHz (band 5) • 800 MHz (band 19) • 800 MHz (band 18) • 900 MHz (band 8) • 1800 MHz (band 3) • 2100 MHz (band 1) • 2600 MHz (band 7) For TDD LTE: • 1900 MHz (Band 39) • 2300 MHz (Band 40) • 2500 MHz (Band 41) • 2600 MHz (Band 38) For UMTS, HSPA+, HSPA: • 800 MHz (band 6) • 800 MHz (band 19) • 850 MHz (band 5) • 900 MHz (band 8) • 1700 MHz (band 9) • 2100 MHz (band 1)	C898EAG-LTE-LA-K9 is a dedicated Multimode LTE SKU for Asean wireless networks and comes with a Sierra Wireless MC7430 modem.

Table 1-33 Supported 4G LTE SKUs for the Cisco 880 and Cisco 890 Series ISRs (continued)

SKU ID	Mode	Operating Region	Frequency Band	Description
C899G-LTE-LA-K9	• LTE • HSPA+ • HSPA • UMTS	Latin America and APAC	For FDD LTE: • 700 MHz (band 28) • 850 MHz (band 5) • 800 MHz (band 19) • 800 MHz (band 18) • 900 MHz (band 8) • 1800 MHz (band 3) • 2100 MHz (band 1) • 2600 MHz (band 7) For TDD LTE: • 1900 MHz (Band 39) • 2300 MHz (Band 40) • 2500 MHz (Band 41) • 2600 MHz (Band 38) For UMTS, HSPA+, HSPA: • 800 MHz (band 6) • 800 MHz (band 19) • 850 MHz (band 5) • 900 MHz (band 8) • 1700 MHz (band 9) • 2100 MHz (band 1)	C899G-LTE-LA-K9 is a dedicated Multimode LTE SKU for Latin American and APAC wireless networks and comes with a Sierra Wireless MC7430 modem.

Table 1-33 Supported 4G LTE SKUs for the Cisco 880 and Cisco 890 Series ISRs (continued)

SKU ID	Mode	Operating Region	Frequency Band	Description
C899G-LTE-GA-K9	• LTE • HSPA+ • HSPA • UMTS • EDGE • GPRS	Global (Europe, New Zealand, and Australia)	LTE: • 800 MHz (band 20) • 900 MHz (band 8) • 1800 MHz (band 3) • 2100 MHz (band 1) • 2600 MHz (band 7) 3G (UMTS, HSPA+, HSPA): • 800 MHz (band 6) • 850 MHz (band 5) • 900 MHz (band 8) • 1900 MHz (band 2) • 2100 MHz (band 1) 2G (GSM, EDGE, GPRS): • 850 MHz • 900 MHz • 1800 MHz • 1900 MHz	Cisco 890 series ISR with Multimode LTE feature for global wireless networks. C899G-LTE-GA-K9 comes with a Sierra Wireless MC7304 modem.
C899G-LTE-VZ-K9	• LTE • EVDO Rev-A • 1xRTT	North America (Verizon)	LTE: • AWS (band 4) • 700 MHz (band 13) • PCS 1900 MHz (band 25) 3G: • 800 MHz (band class 0) • 1900 MHz (band class 1) • 800 MHz (band class 10) 2G: • 800 MHz (band class 0) • 1900 MHz (band class 1) • 800 MHz (band class 10)	Cisco 890 series ISR with Multimode LTE feature for Verizon wireless networks. C899G-LTE-VZ-K9 comes with a Sierra Wireless MC7350 modem.

Table 1-33 Supported 4G LTE SKUs for the Cisco 880 and Cisco 890 Series ISRs (continued)

SKU ID	Mode	Operating Region	Frequency Band	Description
C899G-LTE-NA-K9	• LTE • HSPA+ • HSPA • UMTS • EDGE • GPRS	North America (AT&T, Bell-Canada, Roger, Telus, and other GSM/LTE operators in USA and Canada)	LTE: • AWS (band 4) • 700 MHz (band 5) • 850 MHz (band 17) • 1900 MHz (band 2) • 2600 MHz (band 7) 3G (UMTS, HSPA+, HSPA): • 1900 MHz (band 2) • AWS (band 4) • 850 (band 5) 2G (GSM, EDGE, GPRS): • 850 MHz • 900 MHz • 1800 MHz • 1900 MHz	Cisco 890 series ISR with Multimode LTE feature for wireless networks in USA and Canada. C899G-LTE-NA-K9 comes with a Sierra Wireless MC7354 modem.

Table 1-33 Supported 4G LTE SKUs for the Cisco 880 and Cisco 890 Series ISRs (continued)

SKU ID	Mode	Operating Region	Frequency Band	Description
C899G-LTE-ST-K9	• LTE • EVDO Rev-A • 1xRTT	North America (Sprint)	LTE: • AWS (band 4) • 700 MHz (band 13) • PCS 1900 MHz (band 25) 3G: • 800 MHz (band class 0) • 1900 MHz (band class 1) • 800 MHz (band class 10) 2G: • 800 MHz (band class 0) • 1900 MHz (band class 1) • 800 MHz (band class 10)	Cisco 890 series ISR with Multimode LTE feature for Sprint wireless networks. C899G-LTE-ST-K9 comes with a Sierra Wireless MC7350 modem.
C899G-LTE-JP-K9	• LTE • HSPA+ • HSPA • UMTS • EDGE • GPRS	Global (Japan)	LTE: • 800 MHz (band 20) • 850 MHz (band 19) • 900 MHz (band 8) • 1500 MHz (band 21) • 1800 MHz (band 3) • 2100 MHz (band 1) • 2600 MHz (band 7) 3G (UMTS, HSPA+, HSPA): • 800 MHz (band 6) • 850 MHz (band 5) • 900 MHz (band 8) • 1900 MHz (band 2) • 2100 MHz (band 1) 2G (GSM, EDGE, GPRS): • 850 MHz • 900 MHz • 1800 MHz • 1900 MHz	Cisco 890 series ISR with Multimode LTE feature for global wireless networks. C899G-LTE-JP-K9 comes with a Sierra Wireless MC7330 modem.

Cisco C881G-4G Integrated Services Router

Figure 1-48 shows the front panel of the Cisco C881G-4G ISR.

Figure 1-48 Front Panel of the Cisco C881G-4G ISR

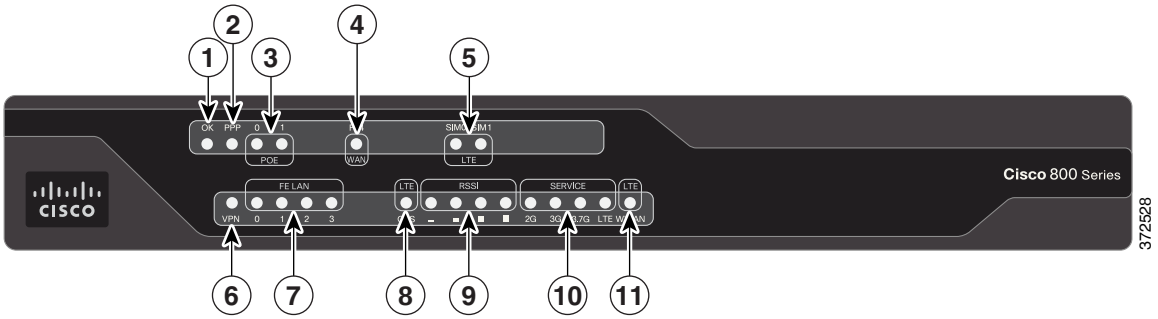

1	Power OK	**7**	FE LAN
2	PPP	**8**	GPS
3	PoE	**9**	RSSI
4	FE WAN Port	**10**	4G
5	SIM	**11**	WWAN
6	VPN		

Table 1-34 describes the LEDs of the Cisco C881G-4G ISR.

Table 1-34 LED Descriptions for the Cisco C881G-4G ISR

Number	LED	Color	Description
1	Power OK	Green	On—DC power is being supplied to the router and the Cisco IOS software is running. Blinking—Boot up is in process, or the router is in ROMMON mode. Off—Power is not supplied to the router.
2	PPP	Green	On—At least one PPP session is established.
3	PoE	Green	On—PoE is connected and powered. Off—PoE is not installed.
		Amber	On—Fault with the PoE.
4	FE WAN Port Link	Green	On—Port is connected. Blinking—Data is either being received or transmitted. Off—Port is not connected.

Table 1-34 LED Descriptions for the Cisco C881G-4G ISR

Number	LED	Color	Description
5	SIM	Green / Yellow (one green blink followed by two yellow blinks)	SIM in slot 0 is active, SIM in slot 1 is not.
		Yellow / Green (one yellow blink followed by two green blinks)	SIM in slot 1 active, SIM in slot 0 is not.
		Off / Green (two green blinks and then a pause)	No SIM in slot 0, SIM present in slot 1.
		Green / Off (slow blink once and then a pause)	SIM is present in slot0, no SIM in slot 1.
		Off / Off	No SIM present in either slots.
6	VPN	Green	On—VPN is connected.
7	FE LAN Port Links Status	Green	On—Ethernet port is connected. Blinking—Data is either being received or being transmitted. Off—Ethernet port is not connected.
8	GPS	Green (solid)	Standalone GPS.
		Green (slow blinking)	GPS is acquiring signals.
		Yellow (solid)	Assisted GPS.
		Yellow (slow blinking)	Assisted GPS is acquiring signals.
		Off	GPS is not configured.
9	RSSI	Green (solid)	Signal strength bars are indicated by the corresponding LEDs.
10	Service	Green (solid)	Service is active and the corresponding LED is lit based on the service level that is active (2G, 3G,3.7G, LTE).
		Off	No service.

Table 1-34 LED Descriptions for the Cisco C881G-4G ISR

Number	LED	Color	Description
11	WWAN	Green	Module is powered on and connected but not transmitting or receiving.
		Green (slow blinking)	Module is powered on and searching for connection.
		Green (fast blinking)	Module is transmitting or receiving.
		Off	Module is not powered.

Figure 1-49 shows the back panel of the Cisco C881G-4G ISR.

Figure 1-49 Back Panel of the Cisco C881G-4G ISR

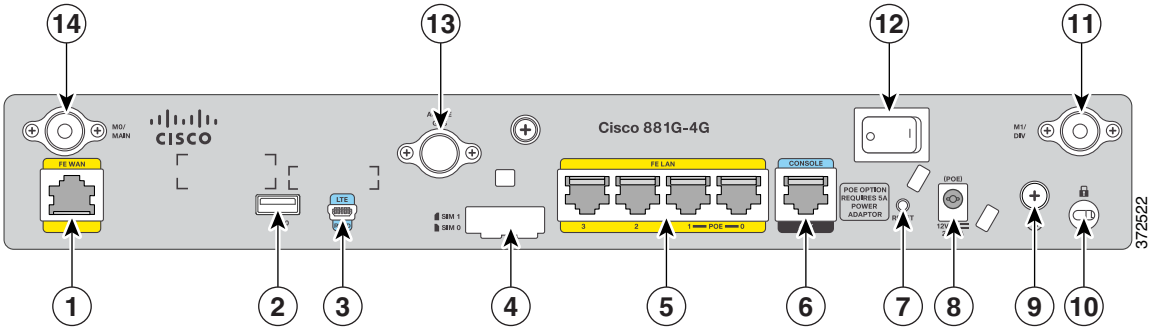

1	Primary WAN port—FE	**9**	Earth ground connection
2	USB port	**10**	Kensington security slot
3	4G port	**11**	4G Antenna connector—M1/DIV
4	SIM slots	**12**	Power switch
5	4-port 10/100 Ethernet switch	**13**	Active GPS antenna connector
6	Serial port—Console or auxiliary	**14**	4G Antenna connector—M0/MAIN
7	Reset button		
8	Power connector		

For information on installing the Cisco C880 Series Routers, see:

http://www.cisco.com/c/en/us/td/docs/routers/access/800/hardware/installation/guide/800HIG.html

Cisco C886VAG-LTE

Figure 1-50 shows the front panel of the Cisco C886VAG-LTE ISR.

Figure 1-50 Front Panel of the Cisco C886VAG-LTE ISR

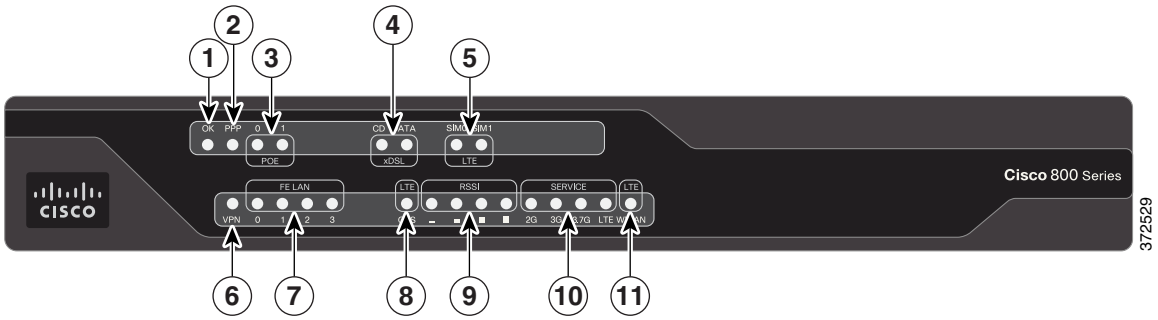

Table 1-35 describes the LEDs for Cisco C886VAG-LTE ISR.

Table 1-35 LED Descriptions for the Cisco C886VAG-LTE ISR

Number	LED	Color	Description
1	Power OK	Green	On—DC power is being supplied to the router and the Cisco IOS software is running. Blinking—Boot up is in process, or the router is in ROMMON mode. Off—Power is not supplied to the router.
2	PPP	Green	On—At least one PPP session is established.
3	PoE	Green	On—PoE is connected and powered. Off—PoE is not installed.
		Amber	On—Fault with the PoE.
4	xDSL CD	Green	On—The xDSL interface is connected to the DSLAM. Blinking—Training the line. Off—Indicates that a connection has not been established or the port is shut down.
	xDSL Data	Green	Blinking—The xDSL interface is either receiving or transmitting data. Off—No data is being transmitted or received.
5	SIM	Green / Yellow (one green blink followed by two yellow blinks)	SIM in slot 0 is active, SIM in slot 1 is not.
		Yellow / Green (one yellow blink followed by two green blinks)	SIM in slot 1 is active, SIM in slot 0 is not.
		Off / Green (two green blinks and then a pause)	No SIM in slot 0, SIM present in slot 1.
		Green / Off (slow blink once and then a pause)	SIM present in slot0, no SIM in slot 1.
		Off / Off	No SIM present in either slots.
6	VPN	Green	On—VPN is connected.
7	FE LAN Port Links Status	Green	On—Ethernet port is connected. Blinking—Data is either being received or transmitted. Off—Ethernet port is not connected.

Table 1-35 LED Descriptions (continued)for the Cisco C886VAG-LTE ISR

Number	LED	Color	Description
8	GPS	Green (solid)	Standalone GPS.
		Green (slow blinking)	GPS is acquiring signals.
		Yellow (solid	Assisted GPS.
		Yellow (slow blinking)	Assisted GPS is acquiring signals.
		Off	GPS is not configured.
9	RSSI	Green (solid)	Signal strength bars are indicated by the corresponding LEDs.
10	Service	Green (Solid)	Service is active and the corresponding LED is lit based on the service level that is active (2G, 3G, 3.7G, LTE).
		Off	No service.
11	WWAN	Green	Module is powered on and connected but not transmitting or receiving.
		Green (slow blinking)	Module is powered on and searching for connection.
		Green (fast blinking)	Module is transmitting or receiving.
		Off	Module is not powered.

Figure 1-51 shows the back panel of the Cisco C886VAG-LTE ISR.

Figure 1-51 Back Panel of the Cisco C886VAG-LTE ISR

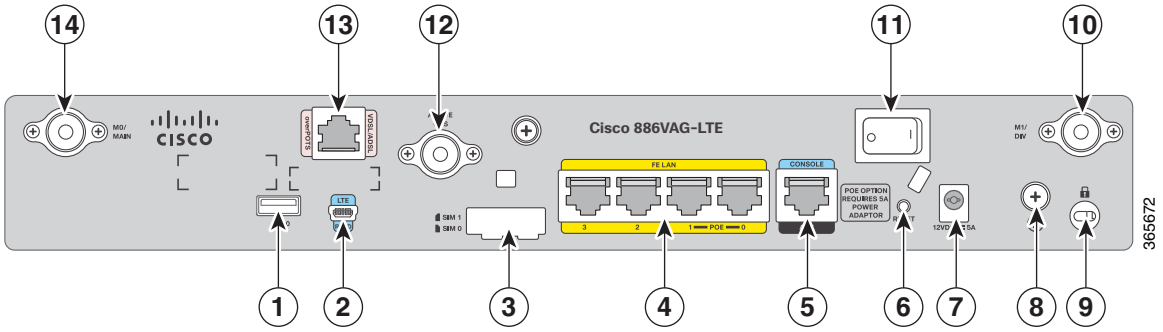

1	USB port	**8**	Earth ground connection
2	LTE port	**9**	Kensington security slot
3	SIM slots	**10**	LTE antenna connector—M1/DIV
4	4-port 10/100 Ethernet switch	**11**	Power switch
5	Serial port—Console or auxiliary	**12**	Active GPS antenna connector
6	Reset button	**13**	Primary WAN port—VDSL or ADSL over ISDN
7	Power connector	**14**	LTE antenna connector—M0/MAIN

Cisco C887VAG-4G Integrated Services Router

Figure 1-52 shows the front panel of the Cisco C887VAG-4G ISR.

Figure 1-52 Front Panel of the Cisco C887VAG-4G ISR

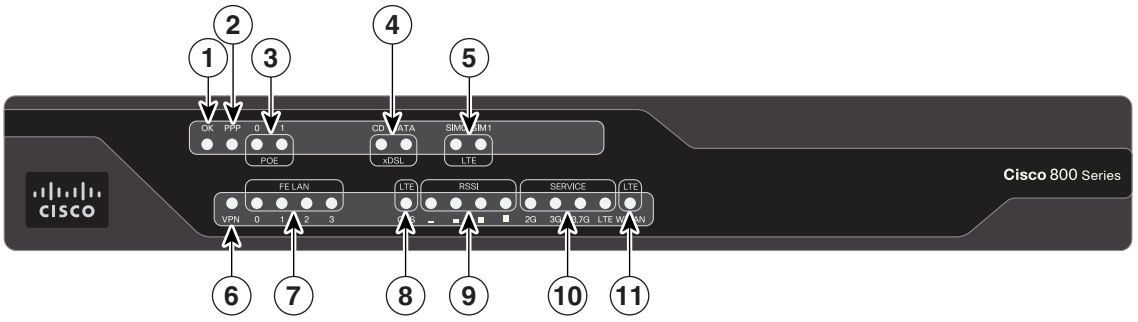

Table 1-36 describes the LEDs for Cisco C887VAG-4G ISR.

Table 1-36 LED Descriptions for the Cisco C887VAG-4G ISR

Number	LED	Color	Description
1	Power OK	Green	On—DC power is being supplied to the router and the Cisco IOS software is running. Blinking—Boot up is in process, or the router is in ROMMON mode. Off—Power is not supplied to the router.
2	PPP	Green	On—At least one PPP session is established.
3	PoE	Green	On—PoE is connected and powered. Off—PoE is not installed.
		Amber	On—Fault with the PoE.
4	xDSL CD	Green	On—The xDSL interface is connected to the DSLAM. Blinking—Training the line. Off—Indicates that a connection has not been established or the port is shut down.
	xDSL Data	Green	Blinking—The xDSL interface is either receiving or transmitting data. Off—No data is being transmitted or received.
5	SIM	Green / Yellow (one green blink followed by two yellow blinks)	SIM in slot 0 is active, SIM in slot 1 is not.
		Yellow / Green (one yellow blink followed by two green blinks)	SIM in slot 1 is active, SIM in slot 0 is not.
		Off / Green (two green blinks and then a pause)	No SIM in slot 0, SIM present in slot 1.
		Green / Off (slow blink once and then a pause)	SIM present in slot0, no SIM in slot 1.
		Off / Off	No SIM present in either slots.
6	VPN	Green	On—VPN is connected.
7	FE LAN Port Links Status	Green	On—Ethernet port is connected. Blinking—Data is either being received or transmitted. Off—Ethernet port is not connected.

Table 1-36 LED Descriptions (continued)for the Cisco C887VAG-4G ISR

Number	LED	Color	Description
8	GPS	Green (solid)	Standalone GPS.
		Green (slow blinking)	GPS is acquiring signals.
		Yellow (solid	Assisted GPS.
		Yellow (slow blinking)	Assisted GPS is acquiring signals.
		Off	GPS is not configured.
9	RSSI	Green (solid)	Signal strength bars are indicated by the corresponding LEDs.
10	Service	Green (Solid)	Service is active and the corresponding LED is lit based on the service level that is active (2G, 3G, 3.7G, LTE).
		Off	No service.
11	WWAN	Green	Module is powered on and connected but not transmitting or receiving.
		Green (slow blinking)	Module is powered on and searching for connection.
		Green (fast blinking)	Module is transmitting or receiving.
		Off	Module is not powered.

Figure 1-53 shows the back panel of the Cisco C887VAG-4G ISR.

Figure 1-53 Back Panel of the Cisco C887VAG-4G ISR

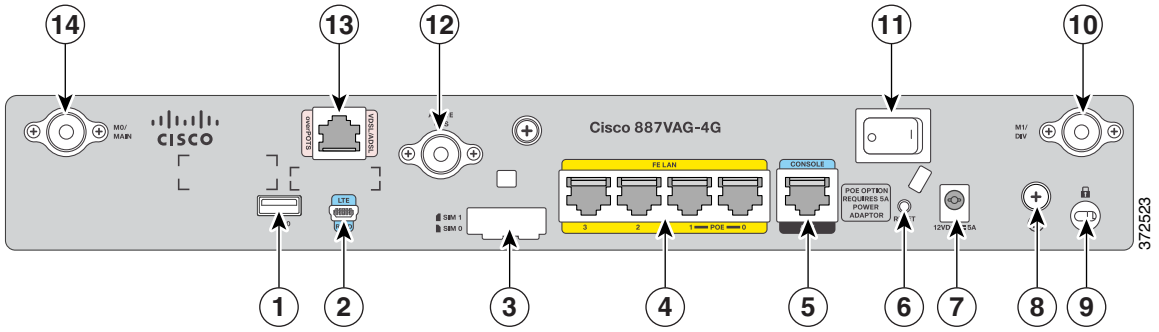

1	USB port	**8**	Earth ground connection
2	4G port	**9**	Kensington security slot
3	SIM slots	**10**	4G antenna connector—M1/DIV
4	4-port 10/100 Ethernet switch	**11**	Power switch
5	Serial port—Console or auxiliary	**12**	Active GPS antenna connector
6	Reset button	**13**	Primary WAN port—VDSL or ADSL over POTS
7	Power connector	**14**	4G antenna connector—M0/MAIN

Cisco C896VAG-LTE Integrated Services Router

Figure 1-54 shows the front panel of the Cisco C896VAG-LTE ISR.

Figure 1-54 Front Panel of the Cisco C896VAG-LTE ISR

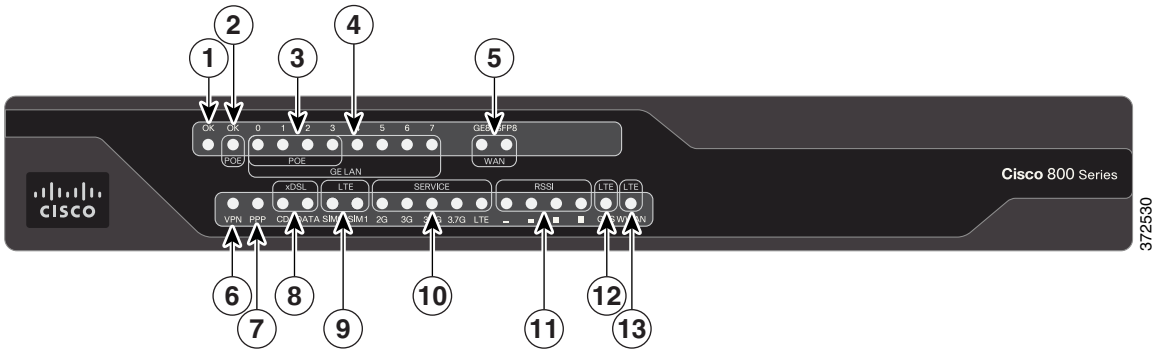

Table 1-37 describes the LEDs for Cisco C896VAG-LTE ISR.

Table 1-37 LED Descriptions for Cisco C896VAG-LTE ISR

Number	LED	Color	Description
1	Power OK	Green	On—DC power is being supplied to the router and the Cisco IOS software is running. Blinking—Boot up is in process, or the router is in ROMMON mode Off—Power is not supplied to the router.
2	PoE	Green	On—PoE is connected and powered. Off—PoE is not installed.
		Amber	On—Fault with the PoE.
3	GE LAN PoE Ports	Green/Amber	Green On—Ethernet port is connected. Amber On—Fault with PoE. There is a fault with the in-line power supply. Green/Amber Blinking—Data is either being received or being transmitted. Green/Amber Off—Ethernet port is not connected.
4	GE LAN Ports	Green	On—Ethernet port is connected. Blinking—Data is either being received or being transmitted. Off—Ethernet port is not connected.
5	GE WAN Ports	Green	On—Port is connected. Blinking—Data is either being received or transmitted. Off—Port is not connected.
	SFP WAN port	Green	On—Port is connected. Blinking—Data is either being received or transmitted. Off—No link
6	VPN	Green	On—VPN is connected.
7	PPP	Green	On—At least one PPP session is established.
8	xDSL CD	Green	On—The xDSL interface is connected to the DSLAM. Blinking—Training the line. Off—Indicates that a connection has not been established or the port is shut down.
	xDSL Data	Green	Blinking—The xDSL interface is either receiving or transmitting data. Off—No data is being transmitted or received.

Table 1-37 LED Descriptions (continued)for Cisco C896VAG-LTE ISR

Number	LED	Color	Description
9	SIM	Green / Yellow (one green blink followed by two yellow blinks)	SIM in slot 0 is active, SIM in slot 1 is not.
		Yellow / Green (one yellow blink followed by two green blinks)	SIM in slot 1 is active, SIM in slot 0 is not.
		Off / Green (two green blinks and then a pause)	No SIM in slot 0, SIM is present in slot 1.
		Green / Off (slow green blink once and then a pause)	SIM is present in slot0, no SIM in slot 1.
		Off / Off	No SIM present in either slots.
10	Service	Green (Solid)	Service is active and the corresponding LED is lit based on the service level that is active (2G, 3G, 3.5G, 3.7G, LTE).
		Off	No service.
11	RSSI	Green (solid)	Signal strength bars are indicated by the corresponding LEDs.
12	GPS	Green (solid)	Standalone GPS.
		Green (slow blinking)	GPS is acquiring signals.
		Yellow (solid)	Assisted GPS.
		Yellow (slow blinking)	Assisted GPS is acquiring signals.
		Off	GPS is not configured.

Table 1-37 LED Descriptions (continued)for Cisco C896VAG-LTE ISR

Number	LED	Color	Description
13	WWAN	Green	Module is powered on and connected but not transmitting or receiving.
		Green (slow blinking)	Module is powered on and searching for connection.
		Green (fast blinking)	Module is transmitting or receiving.
		Off	Module is not powered.

Figure 1-55 shows the back panel of the Cisco C896VAG-LTE ISR.

Figure 1-55 Back Panel of the Cisco C896VAG-LTE ISR

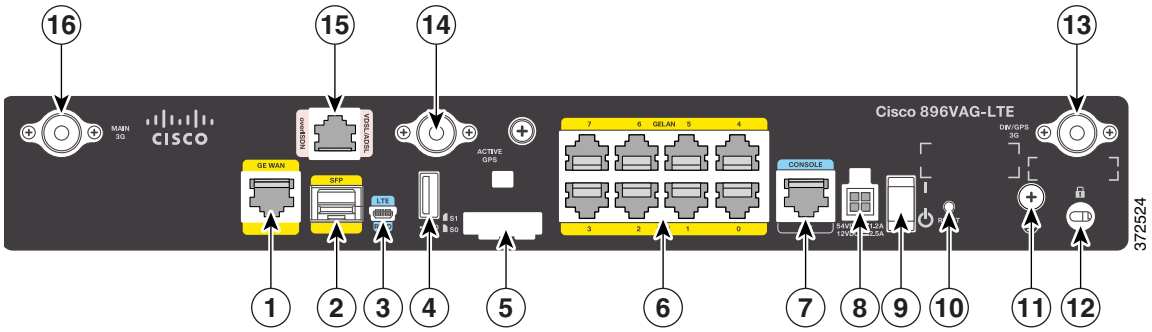

1	GE WAN interface	**9**	On/Off switch
2	SFP port	**10**	Reset button
3	4G port	**11**	Earth ground connection
4	USB port	**12**	Kensington security slot
5	SIM slots	**13**	4G antenna connector—M1/DIV
6	8-port Gigabit Ethernet switch	**14**	Active GPS antenna connector
7	Console / Auxiliary port	**15**	VDSL or ADSL over ISDN
8	Power connector	**16**	4G antenna connector—M0/MAIN

For information on installing Cisco C890 Series Routers, see the following link:
http://www.cisco.com/c/en/us/td/docs/routers/access/800/hardware/installation/guide/800HIG.html

Cisco C897VAG-LTE Integrated Service Router

Figure 1-56 shows the front panel of the Cisco C897VAG-LTE ISR.

Figure 1-56 Front Panel of the Cisco C897VAG-LTE ISR

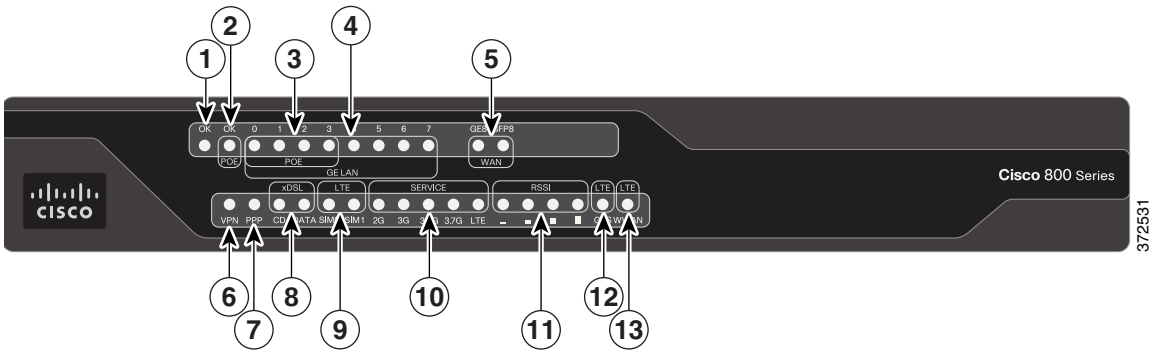

Table 1-38 describes the LEDs for the Cisco C897VAG-LTE ISR.

Table 1-38 LED Descriptions for the Cisco C897VAG-LTE ISR

Number	LED	Color	Description
1	Power OK	Green	On—DC power is being supplied to the router and the Cisco IOS software is running. Blinking—Boot up is in process, or the router is in ROMMON mode. Off—Power is not supplied to the router.
2	PoE	Green	On—PoE is connected and powered. Off—PoE is not installed.
		Amber	On—Fault with the PoE.
3	GE LAN PoE Ports	Green/Amber	Green On—Ethernet port is connected. Amber On—Fault with PoE. There is a fault with the in-line power supply. Green/Amber Blinking—Data is either being received or being transmitted. Green/Amber Off—Ethernet port is not connected.
4	GE LAN Ports	Green	On—Ethernet port is connected. Blinking—Data is either being received or transmitted. Off—Ethernet port is not connected.
5	GE WAN Ports	Green	On—Port is connected. Blinking—Data is either being received or transmitted. Off—Port is not connected.
	SFP WAN port	Green	On—Port is connected. Blinking—Data is either being received or transmitted. Off—No link
6	VPN	Green	On—VPN is connected.
7	PPP	Green	On—At least one PPP session is established.
8	xDSL CD	Green	On—The xDSL interface is connected to the DSLAM. Blinking—Training the line. Off—Indicates that a connection has not been established or the port is shut down.
	xDSL Data	Green	Blinking—The xDSL interface is either receiving or transmitting data. Off—No data is being transmitted or being received.

Table 1-38 LED Descriptions (continued)for the Cisco C897VAG-LTE ISR

Number	LED	Color	Description
9	SIM	Green / Yellow (one green blink followed by two yellow blinks)	SIM in slot 0 is active, SIM in slot 1 is not.
		Yellow / Green (one yellow blink followed by two green blinks)	SIM in slot 1 is active, SIM in slot 0 is not.
		Off / Green (two green blinks and then a pause)	No SIM in slot 0, SIM is present in slot 1.
		Green / Off (slow green blink once and then a pause)	SIM is present in slot0, no SIM in slot 1.
		Off / Off	No SIM present in either slots.
10	Service	Green (solid)	Service is active and the corresponding LED is lit based on the service level that is active (2G, 3G, 3.5G, 3.7G, LTE).
		Off	No service.
11	RSSI	Green (solid)	Signal strength bars are indicated by the corresponding LEDs.
12	GPS	Green (solid)	Standalone GPS.
		Green (slow blinking)	GPS is acquiring signals.
		Yellow (solid)	Assisted GPS.
		Yellow (slow blinking)	Assisted GPS is acquiring signals.
		Off	GPS is not configured.

Table 1-38 LED Descriptions (continued)for the Cisco C897VAG-LTE ISR

Number	LED	Color	Description
13	WWAN	Green	Module is powered on and connected, but not transmitting or receiving.
		Green (slow blinking)	Module is powered on and searching for connection.
		Green (fast blinking)	Module is transmitting or receiving.
		Off	Module is not powered.

Figure 1-57 shows the back panel of the Cisco C897VAG-LTE ISR.

Figure 1-57 Back Panel of the Cisco C897VAG-LTE ISR

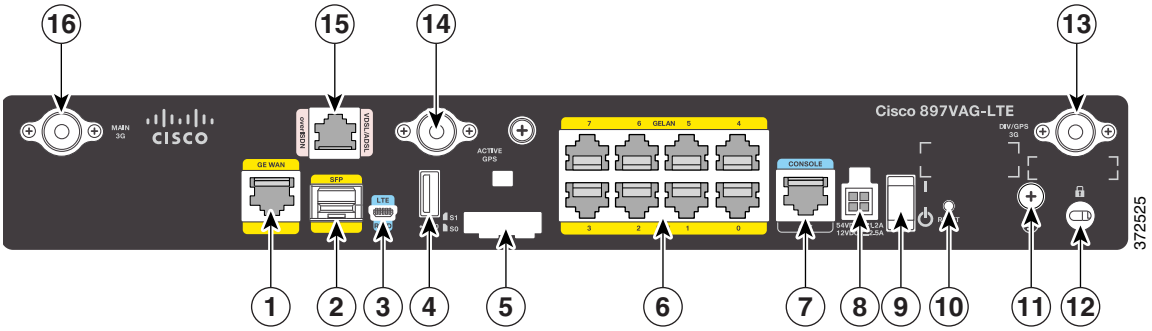

1	GE WAN interface	9	On/Off switch
2	SFP port	10	Reset button
3	4G port	11	Earth ground connection
4	USB port	12	Kensington security slot
5	SIM slots	13	4G antenna connector—M1/DIV
6	8-port Gigabit Ethernet switch	14	Active GPS antenna connector
7	Console/Auxiliary port	15	VDSL or ADSL over POTS
8	Power connector	16	4G antenna connector—M0/MAIN

Cisco C898EAG-LTE Integrated Service Router

Figure 1-58 shows the front panel of the Cisco C898EAG-LTE ISR.

Figure 1-58 Front Panel of the Cisco C898EAG-LTE ISR

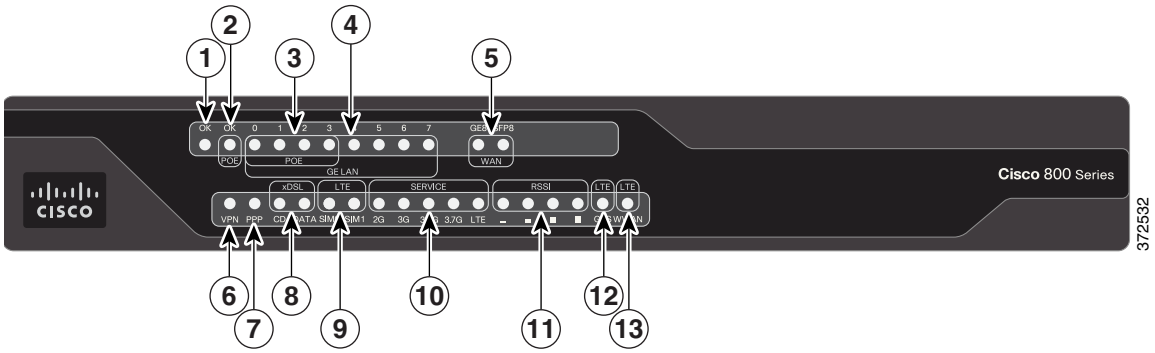

Table 1-39 describes the LEDs for the Cisco C898EAG-LTE ISR.

Table 1-39 LED Descriptions for the Cisco C898EAG-LTE ISR

Number	LED	Color	Description
1	Power OK	Green	On—DC power is being supplied to the router and the Cisco IOS software is running. Blinking—Boot up is in process, or the router is in ROMMON mode. Off—Power is not supplied to the router.
2	PoE	Green	On—PoE is connected and powered. Off—PoE is not installed.
		Amber	On—Fault with the PoE.
3	GE LAN PoE Ports	Green/Amber	Amber On—Ethernet port is connected. Amber On—Fault with PoE. There is a fault with the in-line power supply. Green/Amber Blinking—Data is either being received or transmitted. Green/Amber Off—Ethernet port is not connected.
4	GE LAN Ports	Green	On—Ethernet port is connected. Blinking—Data is either being received or transmitted. Off—Ethernet port is not connected.
5	GE WAN Ports	Green	On—Port is connected. Blinking—Data is either being received or being transmitted. Off—Port is not connected.
	SFP WAN port	Green	On—Port is connected. Blinking—Data is either being received or transmitted. Off—No link
6	VPN	Green	On—VPN is connected.

Table 1-39 LED Descriptions (continued)for the Cisco C898EAG-LTE ISR

Number	LED	Color	Description
7	PPP	Green	On—At least one PPP session is established.
8	xDSL CD	Green	On—The xDSL interface is connected to the DSLAM40. Blinking—Training the line. Off—Indicates that a connection has not been established or the port is shut down.
	xDSL Data	Green	Blinking—The xDSL interface is either receiving or transmitting data. Off—No data is being transmitted or being received.
	xDSL EFM	Green	Blink—The router is operating in EFM mode. Off—Not operating in EFM mode.
9	SIM	Green / Yellow (one green blink followed by two yellow blinks)	SIM in slot 0 is active, SIM in slot 1 is not.
		Yellow / Green (one yellow blink followed by two green blinks)	SIM in slot 1 is active, SIM in slot 0 is not.
		Off / Green (two green blinks and then a pause)	No SIM in slot 0, SIM present in slot 1.
		Green / Off (slow green blink once and then a pause)	SIM is present in slot0, no SIM in slot 1.
		Off / Off	No SIM present in either slot.
10	Service	Green (Solid)	Service is active and the corresponding LED is lit based on the service level which is active (2G, 3G, 3.5G, 3.7 G, LTE).
		Off	No service.
11	RSSI	Green (solid)	Signal strength bars are indicated by the corresponding LEDs.

Table 1-39 LED Descriptions (continued)for the Cisco C898EAG-LTE ISR

Number	LED	Color	Description
12	GPS	Green (solid)	Standalone GPS
		Green (slow blinking)	GPS is acquiring signals.
		Yellow (solid)	Assisted GPS.
		Yellow (slow blinking)	Assisted GPS is acquiring signals.
		Off	GPS is not configured.
13	WWAN	Green	Module is powered on and connected, but not transmitting or receiving.
		Green (slow blinking)	Module is powered on and searching for connection.
		Green (fast blinking)	Module is transmitting or receiving.
		Off	Module is not powered.

Figure 1-59 shows the back panel of the Cisco C898EAG-LTE ISR.

Figure 1-59 Back Panel of the Cisco C898EAG-LTE ISR

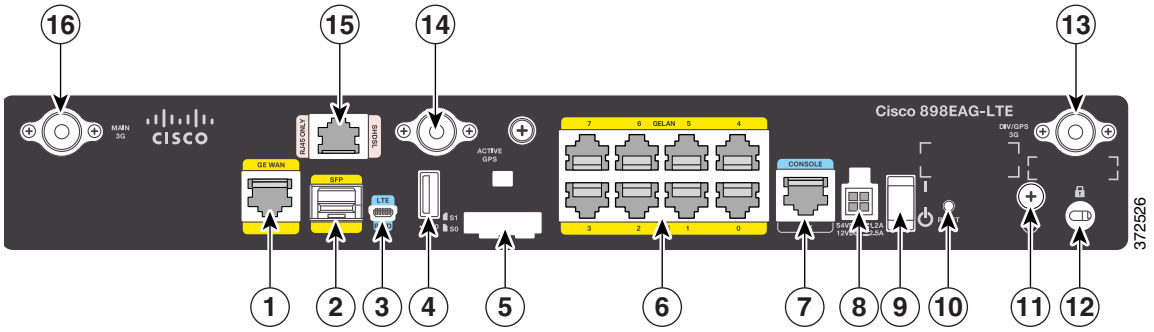

1	GE WAN interface	9	On/Off switch
2	SFP port	10	Reset button
3	4G port	11	Earth ground connection
4	USB port	12	Kensington security slot
5	SIM slots	13	4G antenna connector—M1/DIV
6	8-port Gigabit Ethernet switch	14	Active GPS antenna connector
7	Console/Auxiliary port	15	G.SHDSL over POTS
8	Power connector	16	4G antenna connector—M0/MAIN

Cisco C899G-LTE Integrated Service Router

Figure 1-60 shows the front panel of the Cisco C899G-LTE ISR.

Figure 1-60 Front Panel of the Cisco C899G-LTE ISR

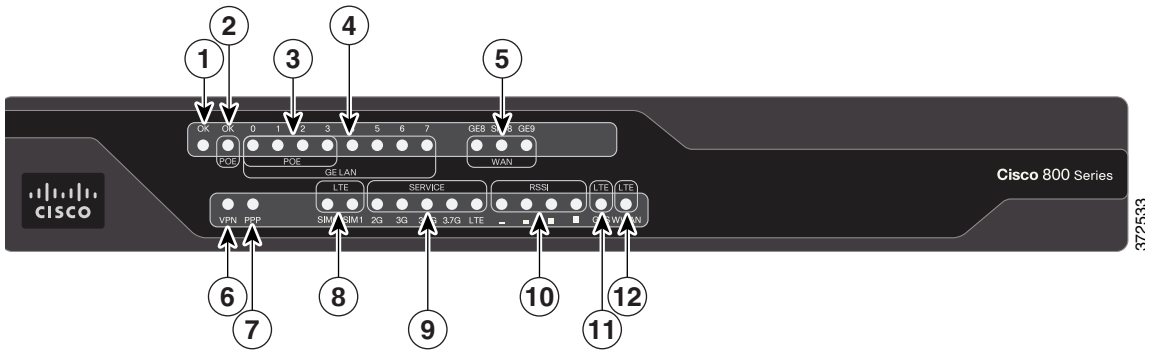

Table 1-40 describes the LEDs for the Cisco C899G-LTE ISR.

Table 1-40 LED Descriptions for the Cisco C899G-LTE ISR

Number	LED	Color	Description
1	Power OK	Green	On—DC power is being supplied to the router and the Cisco IOS software is running. Blinking—Boot up is in process, or the router is in ROMMON mode. Off—Power is not supplied to the router.
2	PoE	Green	On—PoE is connected and powered. Off—PoE is not installed.
		Amber	On—Fault with the PoE.
3	GE LAN PoE Ports	Green	Green On—Ethernet port is connected. Amber On—Fault with PoE. There is a fault with the in-line power supply. Green/Amber Blinking—Data is either being received or transmitted. Green/Amber Off—Ethernet port is not connected.
4	GE LAN Ports	Green	On—Ethernet port is connected. Blinking—Data is either being received or being transmitted. Off—Ethernet port is not connected.
5	GE WAN Ports	Green	On—Port is connected. Blinking—Data is either being received or transmitted. Off—Port is not connected.
	SFP WAN port	Green	On—Port is connected. Blinking—Data is either being received or being transmitted. Off—No link
6	VPN	Green	On—VPN is connected.
7	PPP	Green	On—At least one PPP session is established.

Table 1-40 LED Descriptions for the Cisco C899G-LTE ISR (continued)

Number	LED	Color	Description
8	SIM	Green / Yellow (one green blink followed by two yellow blinks)	SIM in slot 0 is active, SIM in slot 1 is not.
		Yellow / Green (one yellow blink followed by two green blinks)	SIM in slot 1 is active, SIM in slot 0 is not.
		Off / Green (two green blinks and then a pause)	No SIM in slot 0, SIM present in slot 1.
		Green / Off (slow green blink once and then a pause)	SIM is present in slot0, no SIM in slot 1.
		Off / Off	No SIM present in either slots.
9	Service	Green (Solid)	Service is active and the corresponding LED is lit based on the service level which is active (2G, 3G, 3.5G, 3.7G, LTE).
		Off	No service.
10	RSSI	Green (solid)	Signal strength bars are indicated by the corresponding LEDs.
11	GPS	Green (solid)	Standalone GPS.
		Green (slow blinking)	GPS is acquiring signals.
		Yellow (solid)	Assisted GPS.
		Yellow (slow blinking)	Assisted GPS is acquiring signals.
		Off	GPS is not configured.
12	WWAN	Green	Module is powered on and connected, but not transmitting or receiving.
		Green (slow blinking)	Module is powered on and searching for connection.
		Green (fast blinking)	Module is transmitting or receiving.
		Off	Module is not powered.

Figure 1-61 shows the back panel of the Cisco C899G-LTE ISR.

Figure 1-61 Back Panel of the Cisco C899G-LTE ISR

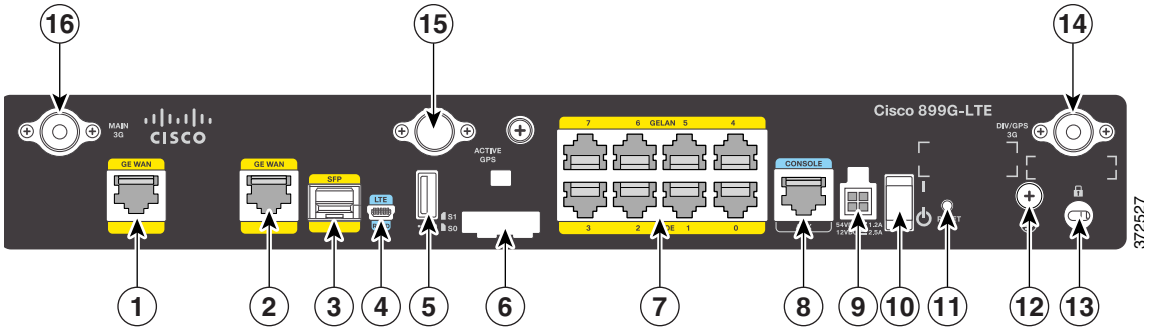

1	GE WAN interface	**9**	Power connector
2	GE WAN interface	**10**	On/Off switch
3	SFP port	**11**	Reset button
4	4G port	**12**	Earth ground connection
5	USB port	**13**	Kensington security slot
6	SIM slots	**14**	4G antenna connector—M1/DIV
7	8-port Gigabit Ethernet switch	**15**	Active GPS antenna connector
8	Console/Auxiliary port	**16**	4G antenna connector—M0/MAIN

Cisco 890 Series Integrated Service Routers

This section contains the following topics:

- Cisco 891, Cisco 892, and Cisco 892F, page 1-114
- Cisco C897VAB-K9, page 1-124

Cisco 891, Cisco 892, and Cisco 892F

The Cisco 891, Cisco 892, and Cisco 892F ISRs have the following features:

- Integrated 8-port 10/100 Ethernet switch for connecting to the LAN
- 10/100 FE and 10/100/1000 Gigabit Ethernet (GE) port for connecting to the WAN
- Separate console and auxiliary ports
- (Optional) embedded Wi-Fi certified dual-radio 802.11a/b/g/n-compliant wireless AP
- Optional 4-port PoE

Note The Cisco 890 Series ISRs can include an optional PoE module that provides power to 802.3af-compliant devices connected to Ethernet ports 0 through 3. If this feature was not configured with the factory order, you must order and install it to enable the PoE function.

Note On a Cisco 891 series router, due to TCAM limitation, you can apply an ACL configuration on maximum 9 ports. If you apply the ACL configuration beyond 9 ports, the configuration will not be applied, and the router will display an error message.

Note Layer 2 FastEthernet ports of Cisco 800 series routers do not support Downloadable ACL(dACL). Layer 2 GigabitEthernet ports support downloadable ACL(dACL).

- Security feature card (SFC) socket
- DIMM expansion socket that can accept up to 512 MB of additional memory, for a total of 768 MB system memory in Cisco 891 and Cisco 892 ISRs, and a total of 1 GB system memory in Cisco 892F series ISRs
- Three reverse-polarity Threaded Neill-Concelman (RP-TNC) connectors on the back panel for non-captive dual-band WLAN antenna (wireless models only)
- Support for the AIM2-CUE-K9 and AIM2-APPRE-104-K9
- GE small-form-factor pluggable (SFP) port (Cisco 892F series ISRs only)

The following feature is located on the front panel of

- Two USB 2.0 ports

Figure 1-62 shows the front panel details of the Cisco 890 Series router.

Figure 1-62 Front Panel of the Cisco 890 Series ISR

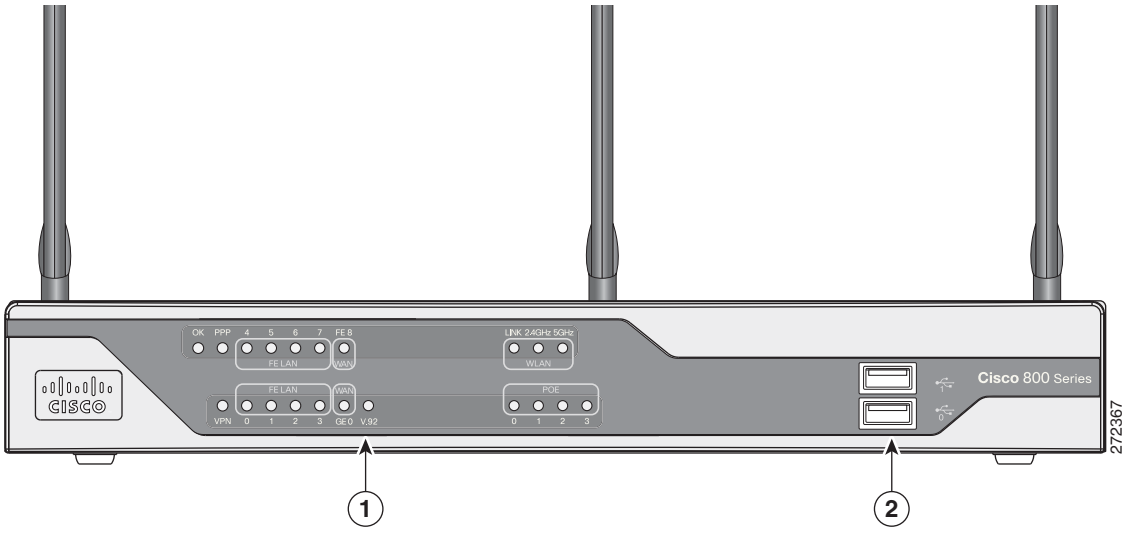

1	LEDs	**2**	USB ports

Figure 1-63 shows the back panel details of the Cisco 892W router. Non wireless routers do not have RP-TNC antennas or connectors on the back panel. Some of the features that are shown may not be available on your router. However, the feature locations are similar across all Cisco 890 series routers.

Figure 1-63 Back Panel of the Cisco 892W Router

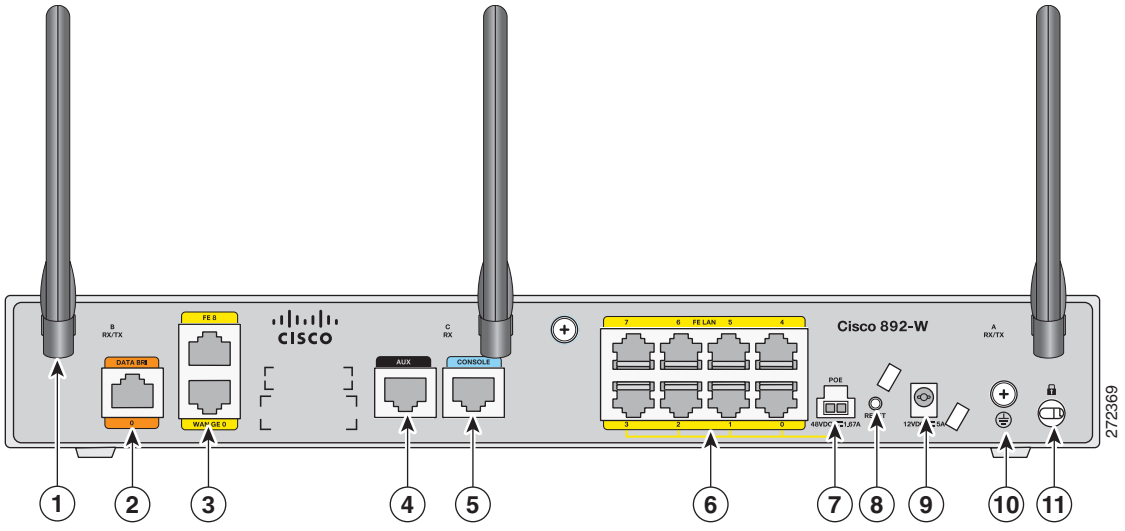

1	Antenna—Dipole swivel antenna attached to RP-TNC connectors (wireless models only)	**7**	PoE power connector for optional PoE module[1]
2	Backup—Data BRI[2] or V.92[3] port	**8**	Reset button
3	Primary WAN port—FE and GE	**9**	Power connector

4	Auxiliary port	**10**	Earth ground connection
5	Console port	**11**	Kensington security slot
6	8-port 10/100 Ethernet switch		

1. The Cisco 890 Series ISRs can include an optional PoE module that provides power to 802.3af-compliant devices connected to Ethernet ports 0 through 3. If this feature was not configured with the factory order you must order and install it to enable the PoE function.
2. The Data BRI port is available only on the Cisco 892 Router models.
3. The V.92 port (not shown) is available only on the Cisco 891 Router models and is located between the console port and the Ethernet switch.

Figure 1-64 shows the location of the SFP port on a Cisco 892FW router.

Figure 1-64 SFP Port Location on a Cisco 892FW Router

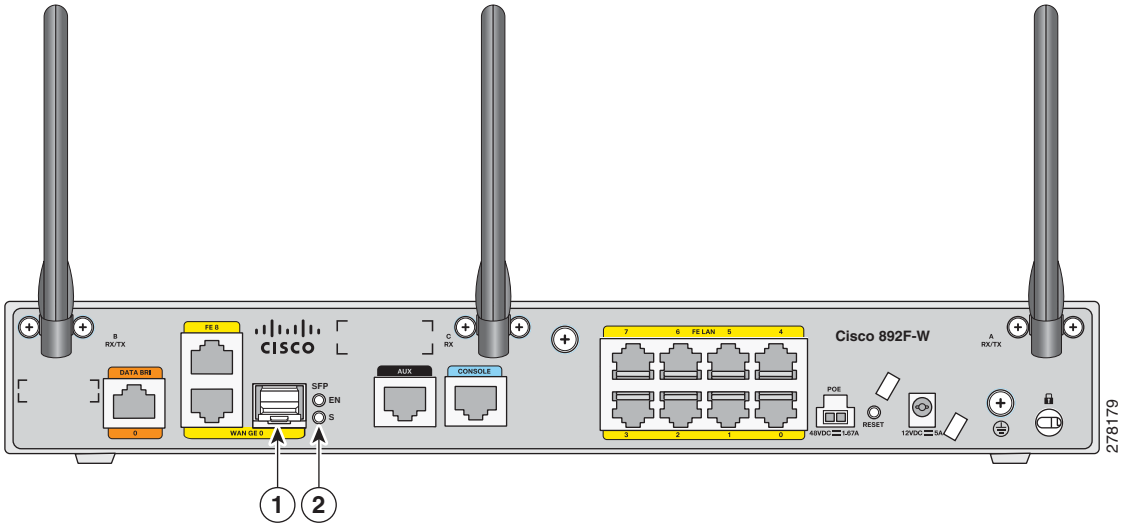

1	SFP port	**2**	SFP LEDs

Cisco 892FSP, Cisco 896VA, Cisco 897VA, and Cisco 898EA

The Cisco 892FSP, Cisco 896VA, Cisco897VA (includes Cisco 897VA, Cisco 897VAM, Cisco 897VAW, Cisco 897VAMW), and Cisco 898EA routers have the following features:

- Integrated 8-port 10/100/1000 Gigabit Ethernet switch for connecting to the LAN
- Two 10/100/1000 GE ports for Cisco 892FSP
- One 10/100/1000 GE port for Cisco 896VA, 897VA, and the Cisco 898EA. Either the SFP socket or the 10/100/1000 GE port can be active at a given time, but not both.
- Single console and auxiliary ports for configuration and management
- 512 MB of on-board memory (upgrade option to 1 GB)
- 256 MB flash memory for Cisco 896VA, Cisco 897VA, and Cisco 898EA
- One USB 2.0 port
- Optional internal adapter for inline PoE on four switch ports for IP phones or external wireless access points for Cisco 896VA, Cisco 897VA, and Cisco 898EA models only. No PoE support on Cisco 892FSP.

Note The Cisco 892FSP does not support AIM2-CUE-K9 and AIM2-APPRE-104-K9 because it does not have an SFC socket.

Note To upgrade DRAM memory from 512 MB to 1 GB on the Cisco 892FSP, Cisco 896VA, Cisco 897VA, and Cisco 898EA routers, you should enable the FL-8XX-512U1GB license.

Figure 1-65 shows the back panel of the Cisco 892FSP Router.

Figure 1-65 Back Panel of the Cisco 892FSP Router

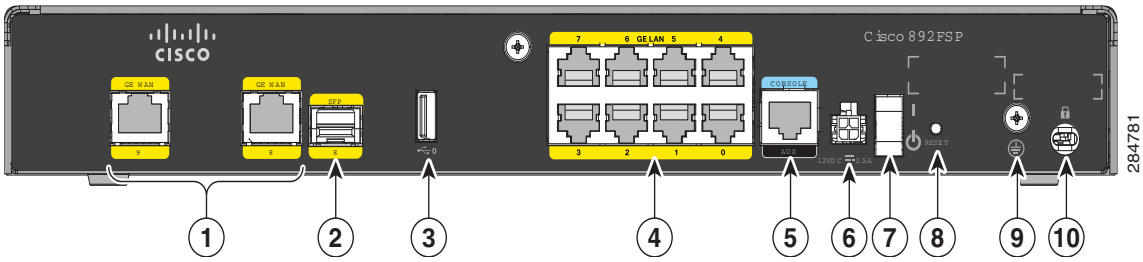

1	GE WAN interface	**6**	Power connector
2	SFP port	**7**	On/Off switch
3	USB port	**8**	Reset button
4	8-port Gigabit Ethernet switch	**9**	Earth ground connection
5	Console/Auxiliary port	**10**	Kensington security slot

Figure 1-66 shows the front panel of the Cisco 892FSP Router.

Figure 1-66 Front Panel of the Cisco 892FSP Router

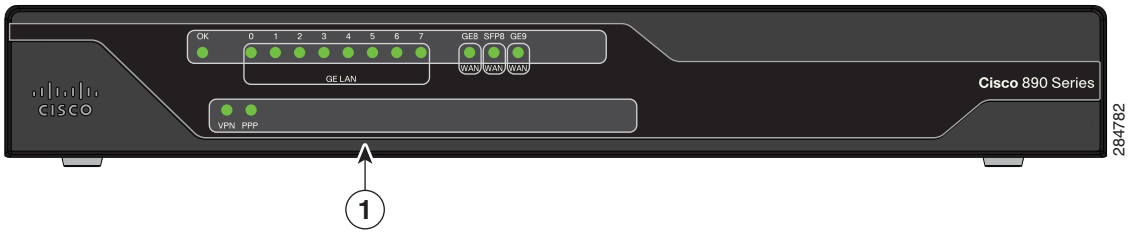

1	LEDs

Figure 1-67 shows the back panel of the Cisco 896VA Router.

Figure 1-67 Back Panel of the Cisco 896VA Router

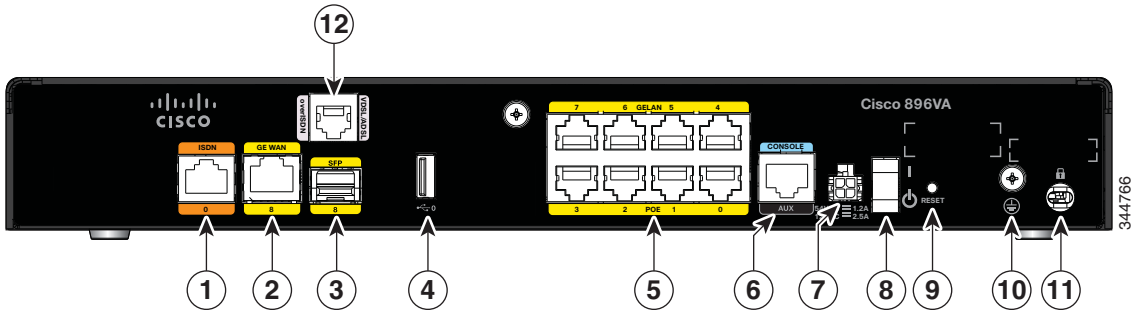

1	ISDN	**7**	Power connector
2	GE WAN interface	**8**	On/Off switch
3	SFP port	**9**	Reset button
4	USB port	**10**	Earth ground connection
5	8-port Gigabit Ethernet switch[1]	**11**	Kensington security slot
6	Console/Auxiliary port	**12**	VDSL / ADSL over ISDN

1. Ports 0 through 3 can be configured as POE, which is an optional feature for this model. If this feature is not configured with the factory order, you must order and install it to enable the PoE function.

Figure 1-68 shows the front panel of the Cisco 896VA and the Cisco 897VA routers.

Figure 1-68 Front Panel of the Cisco 896VA and Cisco 897VA Routers

1	LEDs

Figure 1-69 shows the back panel of the Cisco 897VA Router.

Figure 1-69 Back Panel of the Cisco 897VA Router

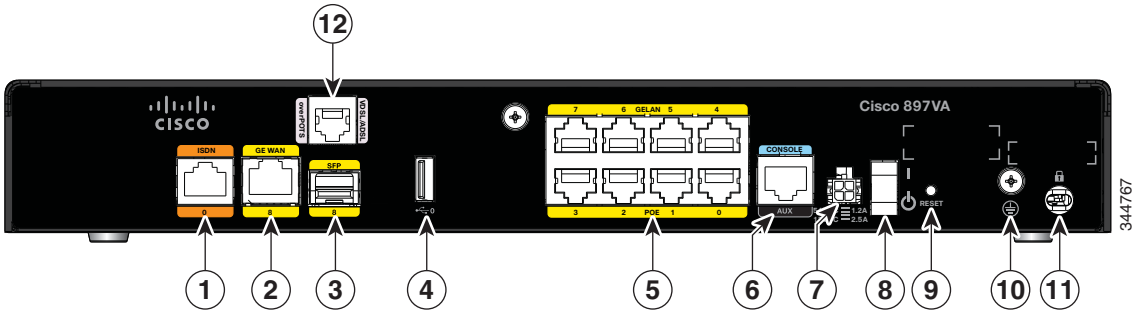

1	ISDN	**7**	Power connector
2	GE WAN interface	**8**	On/Off switch
3	SFP port	**9**	Reset button
4	USB port	**10**	Earth ground connection
5	8-port Gigabit Ethernet switch[1]	**11**	Kensington security slot
6	Console/Auxiliary port	**12**	VDSL/ADSL over POTS

1. Port 0 through 3 can be configured as POE. POE is an optional feature for this model. If this feature was not configured with the factory order, you must order and install it to enable the PoE function.

Figure 1-70 shows the back panel of the Cisco 897VAM Router.

Figure 1-70 Back Panel of the Cisco 897VAM Router

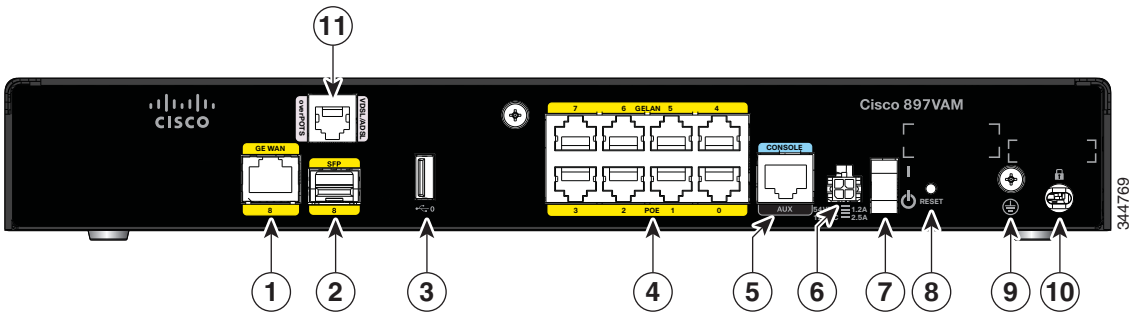

1	GE WAN interface	**7**	On/Off switch
2	SFP port	**8**	Reset button
3	USB port	**9**	Earth ground connection

4	8-port Gigabit Ethernet switch[1]	**10**	Kensington security slot
5	Console / Auxiliary port	**11**	VDSL / ADSL over POTS
6	Power connector		

1. Ports 0 through 3 can be configured as POE, which is an optional feature for this model. If this feature was not configured with the factory order, you must order and install it to enable the PoE function.

Figure 1-71 shows the front panel of the Cisco 897VAM router.

Figure 1-71 Front Panel of the Cisco 897VAM Router

1	LEDs

Figure 1-72 shows the back panel of the Cisco 897VAW router.

Figure 1-72 Back Panel of the Cisco 897VAW Router

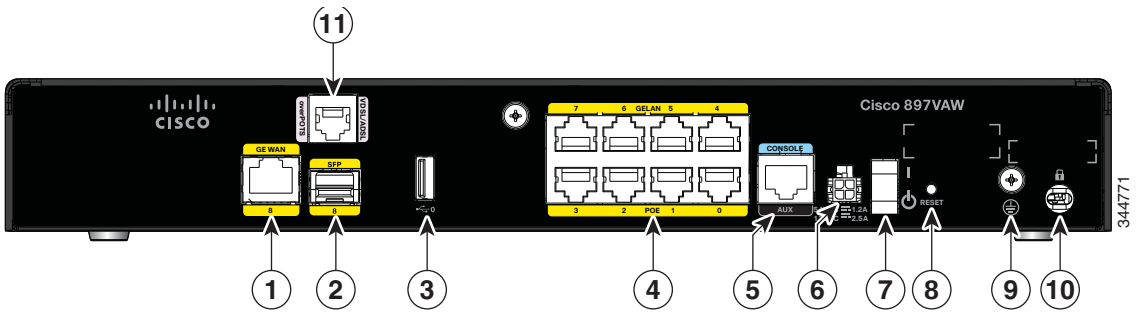

1	GE WAN interface	**7**	On/Off switch
2	SFP port	**8**	Reset button
3	USB port	**9**	Earth ground connection
4	8-port Gigabit Ethernet switch[1]	**10**	Kensington security slot
5	Console / Auxiliary port	**11**	VDSL / ADSL over POTS
6	Power connector		

1. Port 0 through 3 can be configured as POE. POE is an optional feature for this model. If this feature was not configured with the factory order, you must order and install it to enable the PoE function.

Figure 1-73 shows the front panel of the Cisco 897VAW and the Cisco 897VAMW routers.

Figure 1-73 Front Panel of the Cisco 897VAW and the Cisco 897VAMW Routers

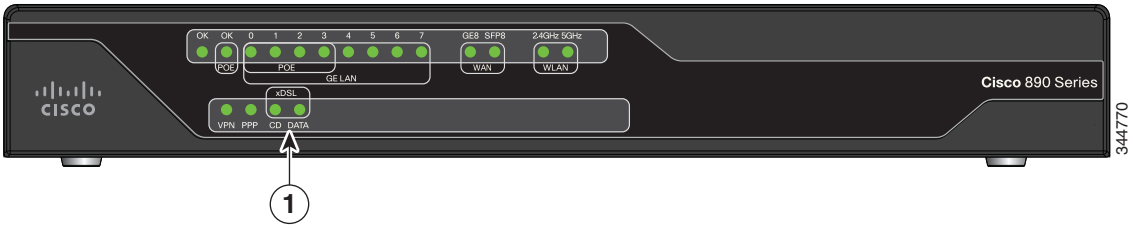

1	LEDs

Figure 1-74 shows the back panel of the Cisco 897VAMW Router.

Figure 1-74 Back Panel of the Cisco 897VAMW Router

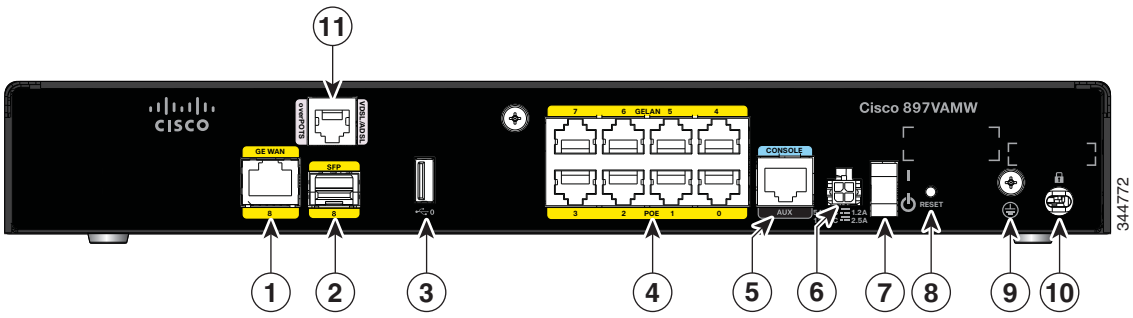

1	GE WAN interface	**7**	On/Off switch
2	SFP port	**8**	Reset button
3	USB port	**9**	Earth ground connection
4	8-port Gigabit Ethernet switch[1]	**10**	Kensington security slot
5	Console/Auxiliary port	**11**	VDSL / ADSL over POTS
6	Power connector		

1. Port 0 through 3 can be configured as POE. POE is an optional feature for this model. If this feature was not configured with the factory order, you must order and install it to enable the PoE function.

Figure 1-75 shows the back panel of the Cisco 898EA router.

Figure 1-75 Back Panel of the Cisco 898EA Router

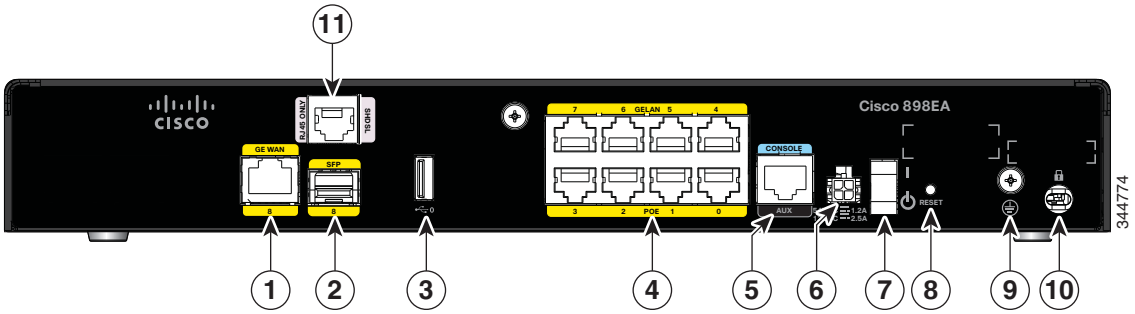

1	GE WAN interface	**7**	On/Off switch
2	SFP port	**8**	Reset button
3	USB port	**9**	Earth ground connection
4	8-port Gigabit Ethernet switch[1]	**10**	Kensington security slot
5	Console/Auxiliary port	**11**	SHDSL (RJ45 only)
6	Power connector		

1. Ports 0 through 3 can be configured as POE, which is an optional feature for this model. If this feature is not configured with the factory order, you must order and install it to enable the PoE function.

Caution The primary WAN port is designed for an RJ-45 connector only. Damage to the primary WAN port may occur if a non-RJ-45 connector is inserted.

Figure 1-76 shows the front panel of the Cisco 898EA Router.

Figure 1-76 Front Panel of the Cisco 898EA Router

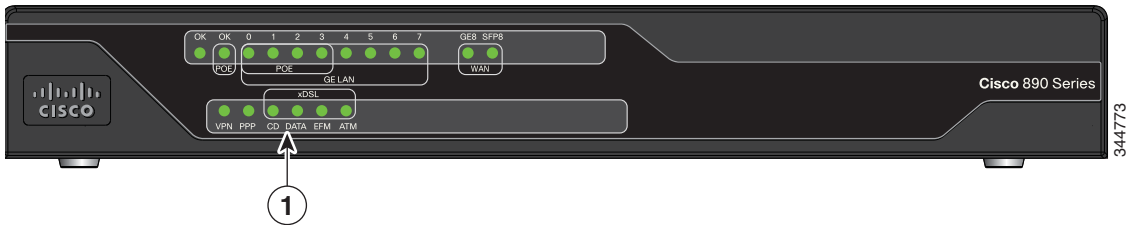

1	LEDs

Cisco C897VAB-K9

The Cisco 897VAB-K9 ISR is designed to support 2-pair VDSL2 bonding up to the 17a profile and single pair support for ADSL/VDSL over POTS up to the 30a profile.

Table 1-41 provides information about important hardware specifications pertaining to Cisco C897VAB-K9 ISR.

Table 1-41 Hardware Specifications of Cisco C897VAB-K9 ISR

Hardware	Description
Flash Memory	256 MB
Main Memory	1-GB DDR RAM; fixed and not extendable
USB port	A USB 2.0-compliant port located on the back panel
FAN	Fanless chassis
PoE	(Optional) Four internal PoE ports
Primary WAN	VDSL/ADSL over POTS
Backup WAN	10/100/1000 GE port (RJ-45/SFP)
Console or auxiliary port	RJ-45
LAN switch	8-port 10/100/1000 GE Switch

Figure 1-77 shows the back panel of the Cisco 897VAB-K9 ISR.

Figure 1-77 Back panel of the Cisco 897VAB-K9 ISR

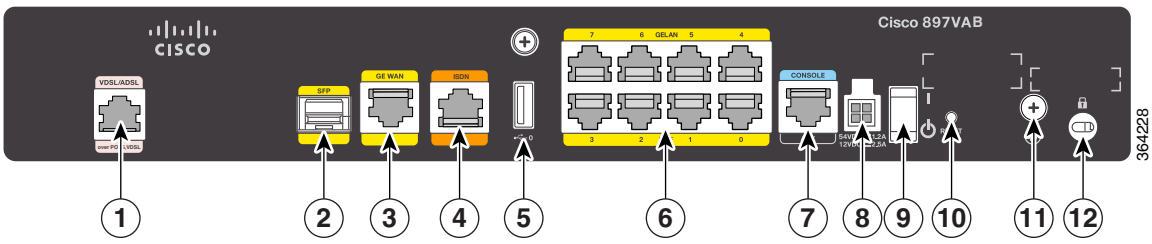

1	Primary WAN VDSL / ADSL over POTS, VDSL2 Bonding[1]	**7**	Console/Auxiliary Port
2	SFP port	**8**	Power Connector
3	GE WAN Interface	**9**	On/Off Switch
4	ISDN	**10**	Reset Button
5	USB Port	**11**	Earth Ground connection
6	8-port Gigabit Ethernet Switch[2]	**12**	Kensington Security slot

1. 1.ADSL and VDSL (up to 17a) single-pair functionality uses the center pair of pins in the RJ-11 connector. VDSL 30a single pair functionality makes use of the pins just adjacent to the center pins. VDSL Bonding makes use of both the center pair pins & those just adjacent to the center pair to provide the 2 bonded VDSL lines. For more information, see Cisco 890 Series Integrated Services Routers Data Sheet.
2. 2.Ports 0 through 3 can be configured as POE, which is an optional feature for this model. If this feature is not configured with the factory order, you must order and install it to enable the PoE function.

Caution The primary WAN port is designed for an RJ-11 or RJ-14 connector only. Damage to the primary WAN port may occur if a non-RJ-11 or RJ-14 connector is inserted.

Figure 1-78 shows the front panel of the Cisco 897VAB-K9 ISR.

Figure 1-78 Front panel of the Cisco 897 VAB-K9 ISR

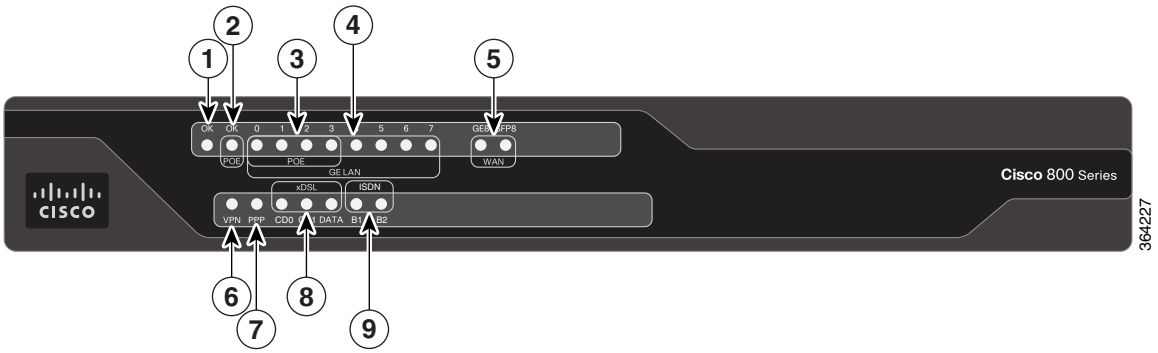

Table 1-42 describes the LEDs for the Cisco 897VAB-K9 ISR.

Table 1-42 LED Descriptions for the Cisco 897VAB-K9 ISR

Number	LED	Color	Description
1	Power OK	Green	On—DC power is being supplied to the router and the Cisco IOS software is running. Blinking—Boot up is in process, or the router is in ROM Monitor (ROMMON) mode. Off—Power is not supplied to the router.
2	PoE OK	Green/Yellow	Off—Both POE card & POE power supply are not present. Yellow On—Either POE card or POE power supply is not present. Green On—Both POE card & POE power supply are present.

Table 1-42 LED Descriptions for the Cisco 897VAB-K9 ISR (continued)

Number	LED	Color	Description
3	GE LAN 0 GE LAN 1 GE LAN 2 GE LAN 3	Green/Yellow	Off—No link. Green On—Link. Yellow On—Fault with PoE. Implies no link. Green Blinking—Data is either being received or transmitted.
4	GE LAN 4 GE LAN 5 GE LAN 6 GE LAN 7	Green	Off—No link. On—Link. Blinking—Data is either being received or being transmitted.
5	GE WAN 8	Green	Off—No link. On—Link. Blinking—Data is either being received or being transmitted.
	SFP WAN 8	Green	Off—No link. On—Link. Blinking—Data is either being received or being transmitted.
6	VPN	Green	Off—No tunnel. On—At least one tunnel is up.
7	PPP	Green	Off—No PPP session. On—At least one PPP session established.
8	xDSL CD0 xDSL CD1	Green	Off—Interface is shutdown. On—Showtime, Link up. Slow Blinking—Modem initialization. Fast Blinking—Training up the line. If both CD0 & CD1 are ON then VDSL Bonding is active.
	xDSL DATA	Green	Off—No Data. Blinking—Data is either being received or transmitted.
9	ISDN B1 ISDN B2	Green	Blinking—Data is either being received or transmitted. Off—No Data.

Cisco C891 Series ISRs

Cisco C891 Series ISRs are designed to deliver secure broadband, metro Ethernet, wireless LAN (WLAN) connectivity, and business continuity. Cisco C891 Series ISRs also provide a 1-port Gigabit Ethernet SFP socket for WAN connectivity.

This section includes the hardware information for the following models:

- Cisco C891F
- Cisco C891FW

Table 1-43 provides information about the hardware specifications of the Cisco C891 Series Routers.

Table 1-43 Hardware Specifications of Cisco C891 Series ISR

Hardware	Description
Flash Memory	256 MB
Main Memory	1-GB DDR RAM; fixed and not extendable
USB port	A USB 2.0-compliant port located on the back panel
FAN	Fanless chassis
PoE	4 PoE ports
WAN	1-port GE or 1-port SFP
Data Backup	• 1-port FE • 1-port ISDN • 1-port V.92
Console or auxiliary port	RJ-45
LAN switch	8-port Gigabit Ethernet
Embedded Wireless AP	Dual 802.11b/g/n and 802.11a/n radios for C891FW

For detailed hardware specifications, see the Cisco C890 Series hardware data sheet at:

http://www.cisco.com/en/US/prod/collateral/routers/ps380/data_sheet_c78-519930.html

Cisco C891F Router

Figure 1-79 shows the front panel of the Cisco C891F Router.

Figure 1-79 Front Panel of the Cisco C891F Router

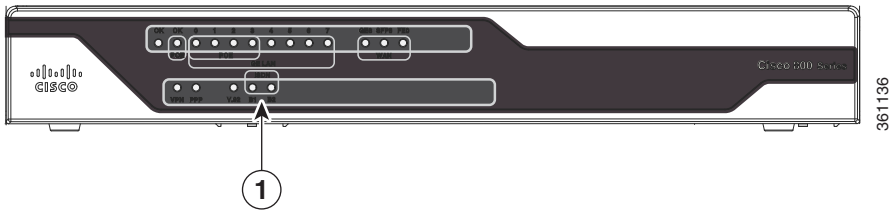

1	LEDs		

For detailed description about the LEDs on the Cisco C890 Series Routers, see the "LEDs" section on page 1-30.

Figure 1-80 shows the back panel of the Cisco C891F Router.

Figure 1-80 Back Panel of the Cisco C891F Router

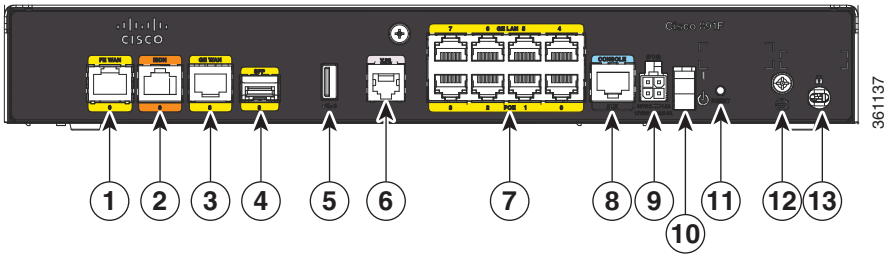

1	Back up WAN port—FE WAN	**8**	Console/Auxiliary port
2	ISDN	**9**	Power connector
3	Primary WAN port—GE WAN	**10**	On/Off switch
4	SFP	**11**	Reset button
5	USB port	**12**	Earth ground connection
6	V.92 backup	**13**	Kensington security slot
7	8-port 10/100/1000 Ethernet switch		

For information on installing the Cisco C890 Series Routers, see:

http://www.cisco.com/en/US/docs/routers/access/800/860-880-890/hardware/installation/guide/2Install880-860.html

Cisco C891FW Router

Figure 1-81 shows the front panel of the Cisco C891FW Router.

Figure 1-81 Front Panel of the Cisco C891FW Router

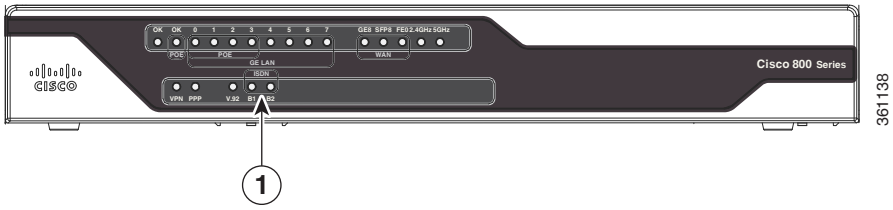

1	LEDs		

For detailed description about the LEDs on Cisco C890 Series Router, see "LEDs" section on page 1-30.

Figure 1-82 shows the back panel of the Cisco C891FW Router.

Figure 1-82 Back Panel of the Cisco C891FW Router

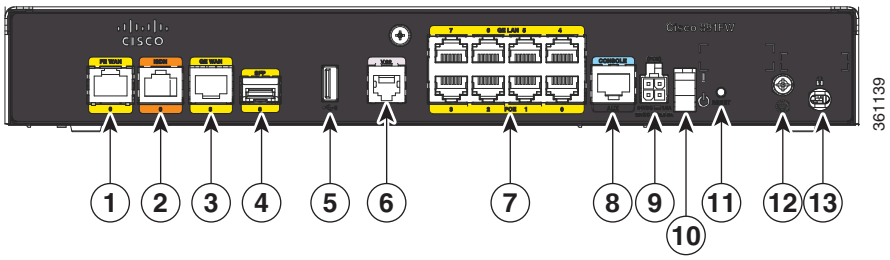

1	Back up WAN port—FE	**8**	Serial port—Console or auxiliary
2	ISDN	**9**	Power connector
3	Primary WAN port—GE	**10**	On/Off switch
4	SFP port	**11**	Reset button
5	USB port	**12**	Earth ground connection
6	V.92 backup port	**13**	Kensington security slot
7	8-port 10/100/1000 Ethernet switch		

For information on installing the Cisco C890 Series Routers, see:

http://www.cisco.com/en/US/docs/routers/access/800/860-880-890/hardware/installation/guide/2Install880-860.html

Cisco C891-24X/K9 Integrated Services Router

Cisco C891-24X/K9 Integrated Services Router (ISR) is a fixed Cisco 890 Series ISR that supports 24 port GE LAN. Cisco C891-24X/K9 ISR provides more switch port options compared to other 890 Series ISRs and Cisco C891-24X/K9 ISR is useful in deployment scenarios where more switching capability is required. Cisco C891-24X/K9 ISR also supports PoE on 8 switch ports. Cisco C891-24X/K9 ISR supports WAN connectivity through dual GE or SFP ports.

Table 1-44 provides information about important hardware specifications pertaining to Cisco C891-24X/K9 ISR.

Table 1-44 Hardware Specifications for Cisco C891-24X/K9 ISR

Hardware	Description
Flash Memory	256 MB Flash and 8 MB serial boot flash
Main Memory	1-GB DDR RAM
USB port	A USB 2.0-compliant port located at the back panel
PoE	8 PoE ports
WAN	2-port GE WAN (copper or SFP)
Console or auxiliary port	RJ-45
LAN switch	24-port 10/100/1000 BASE-T
Fan	Fan less Chassis

Figure 1-83 shows the front panel of the Cisco C891-24X/K9 ISR.

Figure 1-83 Front Panel of the Cisco C891-24X/K9 ISR

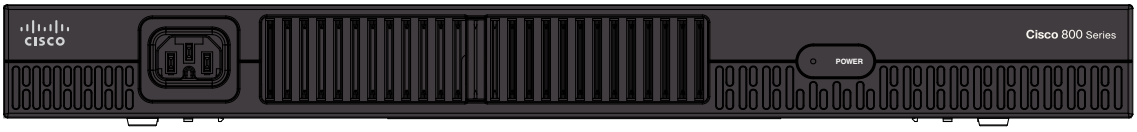

Figure 1-84 shows the back panel of the Cisco C891-24X/K9 ISR.

Figure 1-84 Back Panel of the Cisco C891-24X/K9 ISR

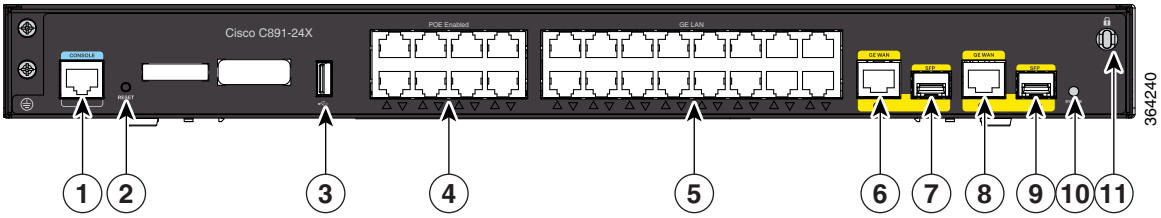

1	Console or auxiliary port	**7**	SFP port
2	Reset Button	**8**	GE WAN port
3	USB port	**9**	SFP port
4	PoE enabled GE LAN ports	**10**	System LED
5	GE LAN ports	**11**	Kensington security slot
6	GE WAN port		

For information on installing the C891-24X/K9 ISR see the following link:

http://www.cisco.com/c/en/us/td/docs/routers/access/800/hardware/installation/guide/800HIG/installing.html

Hardware Features

This section provides an overview of the following hardware features for the Cisco 860 Series, 880 Series, and 890 Series ISRs. A feature summary is available at the end of this section.

- Kensington Lock
- Reset Button
- LEDs
- Memory
- USB Port
- Fan
- Power Supply
- Power over Ethernet Module
- 3G Cellular Data WAN Connectivity
- Small Form-Factor Pluggable Port
- Feature Summary

Kensington Lock

A Kensington security slot is located on the router back panel. To secure the router to a desktop or other surface, use the Kensington lockdown equipment.

Reset Button

The Reset button is used to restore the router to the factory default configuration or to load a custom configuration file.

There are two different ways to do this:

- By pressing the Reset button within 5 seconds of powering up the router.
- By pressing the Reset button for 5 seconds while running IOS software.

Note If you execute a **CLI reboot** command while the embedded wireless AP is running Cisco Unified Wireless Network software, the router reboots, but the AP continues to run. Clients with Cisco Unified Wireless Network software are controlled by a wireless LAN controller (WLC) and can be reset only by the controller.

Cisco 860VAE Routers—Custom Configuration File

On the Cisco 860VAE routers, the reset button can be used to load a custom configuration file without having to use the CLI. The configuration file can be located on an external USB flash drive or on the router's compact flash.

The custom configuration file must be named one of the following:

- customer-config
- SN-customer-config (where “SN” is the unique hardware serial number)

When the system attempts to load a custom configuration file, configuration files on a USB flash drive have priority over configuration files on the router's flash drive and the SN-customer-config file name has priority over the customer-config file name. The priority for loading a configuration file is as follows:

1. USB flash0—SN-customer-config
2. USB flash0—customer-config
3. Router flash—SN-customer-config
4. Router flash—customer-config

If the router does not find a valid custom configuration file, the system aborts the process.

To reset the router to the factory default configuration, follow these steps:

Step 1 Verify that Cisco IOS is running correctly by checking that the system status LED is on.

Step 2 Press and hold the **Reset** button until the system status LED begins to flash. Typically, this occurs within 5 seconds.

The router reloads itself after the startup configuration has been replaced with the new customer configuration.

Custom Configuration File for Cisco 892FSP, Cisco 896VA, Cisco 897VA, and Cisco 898EA

In the first method, the configuration file can be located on the router's compact flash or on the router's NVRAM. The custom configuration file must use **cfg** as the filename extension.

When the system attempts to load a custom configuration file, configuration files on NVRAM have priority over configuration files on the router's compact flash.

The priority for loading a configuration file is as follows:

1. nvram: *.cfg
2. Router flash: *.cfg

If the router does not find a valid custom configuration file, the system aborts the process.To reset the router to the factory default configuration or to load a custom configuration file, follow these steps:

Step 1 Turn the power on.

Step 2 Press and hold the **Reset** button until the system status LED begins to flash. Typically, this occurs within 5 seconds.

The router reloads itself after the startup configuration has been replaced with the new customer configuration.

In the second method, the configuration file can be located on an external USB flash drive or on the router's compact flash.

The custom configuration file must be named one of the following:

- customer-config
- customer-config.SN, where "SN" is the unique hardware serial number.

When the system attempts to load a custom configuration file, configuration files on a USB flash drive have priority over configuration files on the router's flash drive and the "customer-config.SN" file name has priority over the **customer-config** file name.

The priority for loading a configuration file is as follows:

1. usbflash0:customer-config.SN
2. usbflash0:customer-config
3. Router flash:customer-config.SN
4. Router flash:customer-config

If the router does not find a valid custom configuration file, the system aborts the process.

To reset the router to the factory default configuration or to load a custom configuration file, follow these steps:

Step 1 Verify that Cisco IOS is running correctly by checking that the system status LED is on.

Step 2 Press and hold the Reset button until the system status LED begins to flash. Typically, this occurs within 5 seconds.

The router reloads itself after the startup configuration has been replaced with the new customer configuration.

LEDs

The LEDs are located on the front panel of the router.

- Table 1-45 describes the LEDs for the Cisco 860 Series, Cisco 880 Series, and Cisco 890 Series ISRs.
- Table 1-46 lists the LED descriptions for the Cisco 866VAE, Cisco 867VAE, Cisco 866VAE-K9, and Cisco 867VAE-K9 ISRs.
- Table 1-47 lists the LED description for the Cisco 892FSP, Cisco 896VA, Cisco 897VA, and Cisco 898EA ISRs.
- For a description of LEDs for Cisco 860VAE-W-A-K9, Cisco 860VAE-W-E-K9, and Cisco 860VAE-POE-W-A-K9 ISRs models, see the "Cisco 860VAE-W-A-K9, Cisco 860VAE-W-E-K9, and Cisco 860VAE-POE-W-A-K9 ISRs" section on page 1-50.

Table 1-45 LED Descriptions for the Cisco 860 Series, Cisco 880 Series, and Cisco 890 Series ISRs

LED	Color	Description	860 Series	880 Series	890 Series
Power OK	Green	On—DC power is being supplied to the router and the Cisco IOS software is running. Blinking—Bootup is in process, or the router is in Rommon monitor mode. Off—Power is not supplied to the router.	All models	All models	All models
Link Status FE0 Link Status FE1 Link Status FE2 Link Status FE3	Green	On—Ethernet port is connected. Blinking—Data is either being received or being transmitted. Off—Ethernet port is not connected.	All models	All models	All models
Link Status FE4 Link Status FE5 Link Status FE6 Link Status FE7	Green	On—Ethernet port is connected. Blinking—Data is either being received or being transmitted. Off—Ethernet port is not connected.	—	—	All models
FE WAN Port Link Status	Green	On—Port is connected. Blinking—Data is either being received or being transmitted. Off—Port is not connected.	861 models	881 models	All models
GE WAN Port Link Status	Green	On—Port is connected. Blinking—Data is either being received or being transmitted. Off—Port is not connected.	—	—	All models

Table 1-45 LED Descriptions for the Cisco 860 Series, Cisco 880 Series, and Cisco 890 Series ISRs (continued)

LED	Color	Description	860 Series	880 Series	890 Series
WLAN (2.4 GHz)	Green	On—Radio is connected, SSID[1] is configured, and client is associated, but no data is being received or being transmitted. Slow blinking—Radio is connected, SSID is configured, and beacons are being transmitted. Fast blinking—Data is either being received or being transmitted. Off—Radio is shut down, and no SSID is configured.	Wireless models	Wireless models	Wireless models
WLAN (5 GHz)	Green	On—Radio is connected, SSID is configured, and client is associated, but no data is being received or being transmitted. Slow blinking—Radio is connected, SSID is configured, and beacons are being transmitted. Fast blinking—Data is either being received or being transmitted. Off—Radio is shut down, and no SSID is configured.	—	Wireless models	Wireless models
WLAN LINK (Autonomous Mode)	Green	On—Wireless link is up. Blinking—Ethernet link is up, and data is either being received or being transmitted. Off—Wireless link is down.	Wireless models	Wireless models	Wireless models
WLAN LINK (Unified Mode)	Green	On—Ethernet link is up, and wireless access point (AP) is communicating with LWAPP[2] controller. Blinking—Ethernet link is up, but wireless AP is not communicating with LWAPP controller. Off—Ethernet link is down.	—	Wireless models	Wireless models
PoE	Green	On—PoE is connected and powered. Off—PoE is not installed.	—	Models with PoE	Models with PoE
	Amber	On—Fault with the PoE.			
VPN	Green	On—VPN is connected.	—	All models	All models
PPP[3]	Green	On—At least one PPP session is established.	—	All models	All models
xDSL[4] CD	Green	On—The xDSL interface is connected to the DSLAM[5]. Blinking—Training to the line. Off—Indicates that a connection has not been established or the port is shut down.	—	886, 886VA, 887, 887VA, 887VA-M 888 models	896VA, 897VA, 898EA, 897VAB

Table 1-45 LED Descriptions for the Cisco 860 Series, Cisco 880 Series, and Cisco 890 Series ISRs (continued)

LED	Color	Description	860 Series	880 Series	890 Series
xDSL Data	Green	Blinking—The xDSL interface is either receiving or transmitting data. Off—No data is being transmitted or being received.	—	886, 886VA, 887, 887VA, 887VA-M 888 models	896VA, 897VA, 898EA, 897VAB
xDSL ATM	Green	On—The router is operating in ATM[6] mode. Off—Not operating in ATM mode.	—	888E	—
xDSL EFM	Green	Blink—The router is operating in EFM[7] mode. Off—Not operating in EFM mode.	—	—	898EA
Data BRI LINK	Green	On—ISDN D channel is connected.	—	887, 888 models	892 models
Data BRI B1	Green	Blinking—B1 channel is either receiving or sending data, or data is passing through ISDN channel 1.	—	887, 888 models	892 models
Data BRI B2	Green	Blinking—B2 channel is receiving or sending data, or data is passing through ISDN channel 2.	—	887, 887V, 888 models	892 models
3G[8] WWAN[9]	Green	On—Service is established. Slow Blinking—Searching for service. Fast Blinking—Data is either being received or being transmitted.	—	3G models	—
3G RSSI[10]	Green	Off—Low signal strength (lower than -100 dBm). On—High RSSI (-69 dBm or higher). Slow Blinking—Low or medium RSSI (-99 to -90 dBm). Fast Blinking—Medium RSSI (-89 to -70 dBm).	—	3G models	—
	Amber	On—No service.	—	3G models	—
3G GSM[11]	Green	On—Service is established. Off—No service.	—	3G models	—
3G CDMA[12]	Green	On—Service is established. Off—No service.	—	3G models	—
FXO Voice	Green	On—FXO port is connected. Blinking—FXO port is either receiving or transmitting data.	—	881[13]	—
BRI Voice LNK	Green	On—BRI interface is connected.	—	—	—
BRI Voice B1	Green	On—BRI B1 channel is connected. Blinking—BRI B1 channel is either receiving or transmitting data.	—	—	—

Table 1-45 LED Descriptions for the Cisco 860 Series, Cisco 880 Series, and Cisco 890 Series ISRs (continued)

LED	Color	Description	860 Series	880 Series	890 Series
BRI Voice B2	Green	On—BRI B2 channel is connected. Blinking—BRI B2 channel is either receiving or transmitting data.	—	—	—
FXS/DID Voice	Green	On—FXS/DID port is connected. Blinking—FXS/DID port is either receiving or transmitting data.	—	SRST models	—
V.92 Modem	Green	On—Modem is connected. Blinking—V.92 port is either receiving or transmitting data.	—	—	891 models
SFP[14] EN	Off	Not present.	—	—	892F models
	Green	Present and enabled.	—	—	
	Amber	Present with failure.	—	—	
SFP S	Green	Blinking—Blinking frequency indicates port speed.	—	—	892F models

1. SSID = service set identifier.
2. LWAPP = Lightweight Access Point Protocol.
3. PPP = Point-to-Point Protocol.
4. xDSL = General term referring to various forms of DSL, including ADSL (asymmetric digital subscriber line) and VDSL (very-high-data-rate digital subscriber line).
5. DSLAM = digital subscriber line access multiplexer.
6. ATM = Asynchronous Transfer Mode.
7. EFM = Ethernet in the First Mile.
8. 3G = Third-Generation.
9. WWAN = wireless WAN.
10. RSSI = Received Signal Strength Indicator.
11. GSM = Global System for Mobile Communication.
12. CDMA = code division multiple access.
13. SRST = Survivable Remote Site Telephony.
14. SFP = small-form-factor pluggable.

Table 1-46 describes the LEDs for the Cisco 866VAE, Cisco 867VAE, Cisco 866VAE-K9, and Cisco 867VAE-K9 ISRs.

Table 1-46 LED Descriptions for the Cisco 866VAE, Cisco 867VAE, Cisco 866VAE-K9, and Cisco 867VAE-K9 ISRs

LED	Activity	Description
Power/System	Power/System LED: Solid GE_MODE LED: Off DSL_LINK LED: Off	Power is on and system running in the ROMMON mode. **Note** During the early booting stage, both Power/System, GE_MODE, and DSL_LINK LED will be turned on temporarily for the power on test. DSL_LINK and GE_MODE LED will be turned off later after booting into ROMMON.
	Power/System LED: Solid GE_MODE LED: Solid DSL_LINK LED: Off	Cisco IOS functioning in GE WAN mode.
	Power/System LED: Solid GE_MODE LED: Off DSL_LINK LED: Solid or flashing	Cisco IOS functioning in DSL_WAN mode. **Note** In Cisco IOS DSL_WAN mode, DSL_LINK LED will be solid after DSL training complete or flashing during training.
xDSL[1] ACT	Green	On—DSL interface is up. Blinking—DSL WAN activity (traffic in either direction). Faster blinking—Heavier traffic Off—Device is powered off or the DSL WAN interface is down.
xDSL Link	Green	On—DSL WAN Mode is selected and DSL training complete. Blinking—DSL WAN Mode is selected but incomplete DSL Link Up state, such as in-training, or controller “OFF,” or no cable attached to DSL connector. Off—Device is powered off or GE WAN mode is selected.
GE ACT	Green	On—GE WAN interface is up. Blinking—GE WAN activity (traffic in either direction). Off—Device is powered off or GE WAN interface is down.
GE Mode	Green	On—GE WAN Mode is selected. Off—Device is powered off or DSL WAN mode is selected.

1. xDSL = General term referring to various forms of DSL, includi\\\\\\\\\\\\\\\\\\\\\\\\\\\\\\\\\\\\
ng ADSL (asymmetric digital subscriber line) and VDSL (very-high-data-rate digital subscriber line).

Table 1-47 describes the LEDs for the Cisco 892FSP.

Table 1-47LED desciption for Cisco 892FSP ISR, 896VA, 897VA, and 898EA Routers

LED	Color	Activity	Description
PWR_OK	Green	Power Status	Off—No power. Steady on—Normal operation. Blink—Boot up phase or in ROM Monitor mode.
GE0 GE1 GE2 GE3 GE4	Green/Amber	Link Status	Green On—Ethernet port is connected. Amber On—Fault with PoE. There is a fault with the inline power supply. Green/Amber Blinking—Data is either being received or being transmitted. Green/Amber Off—Ethernet port is not connected.
GE5 GE6 GE7	Green	Link Status	On—Ethernet port is connected. Blinking—Data is either being received or being transmitted. Off—Ethernet port is not connected.
GE WAN ports	Green	Link Status	On—Port is connected. Blinking—Data is either being received or being transmitted. Off—No link.
SFP WAN ports	Green	Link Status	On—Port is connected. Blinking—Data is either being received or being transmitted. Off—No link.
VPN_OK	Green	—	Off—No tunnel. Steady on—At least one tunnel is up.
PPP_OK	Green	—	Off—No PPP session. Steady on—At least one PPP established.

Shared LEDs on the Cisco 881-V and Cisco 887VA-V Voice and Data Routers

On the Cisco 881-V, Cisco 887VA-V, and Cisco 887VA-V-W routers, the BRI1, BRI2 and the FXS ports share LED indicators. The following ports share an LED indicator:

- BRI 1B1 channel and FXS 3
- BRI 1B2 channel and FSX 4
- BRI 2B1 channel and FXS 5
- BRI 2 B2 channel and FXS 6

Because the LED indicators are shared, the LED illuminates (green) when either port is active. For example, the LED indicator labeled BRI 1 B1 illuminates when either the BRI1 B1 channel is active or when the FXS port is active. You can determine the activity status on each interface by using the following commands.

- For activity status on the FXS ports, use the **show port summary** command.
- For activity status on the BRI ISDN port, use the s**how isdn status** command.

Figure 1-85 shows a close-up view of the LED indicators.

Figure 1-85 Close-up of the BRI and FXS LED Indicators

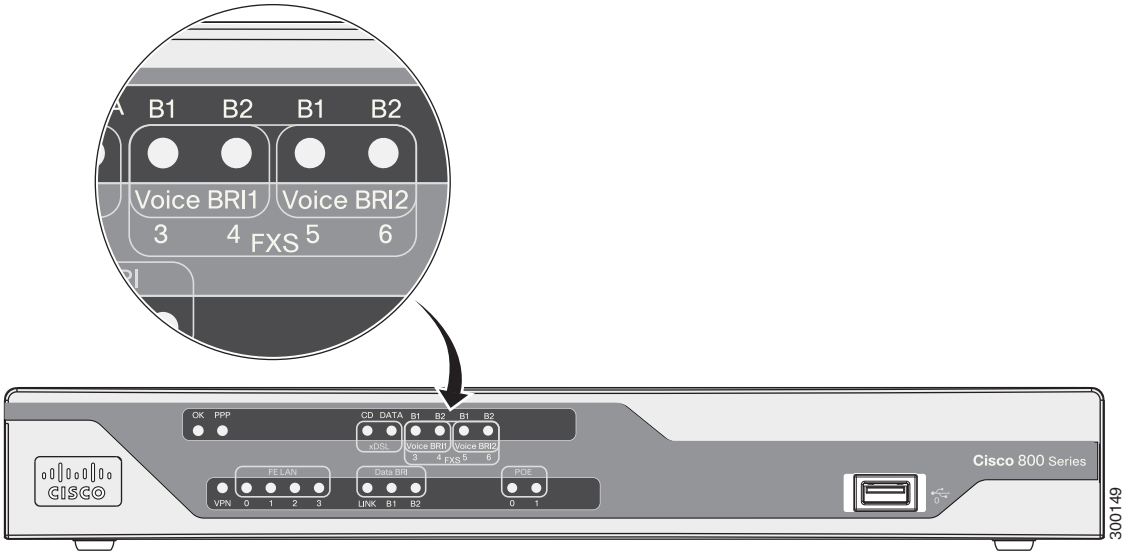

Memory

The Cisco 860 series, 880 series, and 890 series routers contain flash memory and main memory.

Flash Memory

The Cisco 860 series, 880 series, and 890 series ISRs use non-upgradable flash memory storage. The onboard flash memory contains the Cisco IOS software image, the boot flash contains the ROMMON boot code, and a separate non-volatile flash contains the cookie configuration.

Table 1-48 describes the default flash memory storage.

Table 1-48 Flash Memory Storage

Models	Flash Memory Storage
Cisco 860 series and 880 series routers	128 MB
Cisco 880 series voice routers and Cisco 890 series routers	256 MB
Cisco 880 series routers with embedded WLAN antennas	256 MB
Cisco 860VAE routers	8 MB boot flash, 128 MB for IOS
Cisco 860VAE-K9	64 MB boot flash and IOS

Note Flash memory is not upgradable. An external USB flash memory module may be used if additional flash memory is needed.

Main Memory

Table 1-49 describes the main onboard memory storage for different router models.

Table 1-49 Main Onboard Memory Storage

Models	Onboard Memory Storage	Expandability
Cisco 860 series routers	256 MB	Not expandable.
Cisco 860VAE series routers	256 MB	Not expandable.
Cisco 880 series routers	256 MB (expandable to 768 MB)	A memory expansion slot accommodates a PC2-4200, 256-MB or 512-MB double data rate 2 (DDR2) SODIMM, for a maximum of 768 MB.
Cisco 880 series routers with embedded WLAN antennas	512 MB	Not expandable.
Cisco 892FSP, 896VA, 897VA, 898EA routers	512 MB	Expandable to 1 GB.

USB Port

Table 1-50 describes the USB ports for different router models.

Table 1-50 USB Ports

Models	USB
Cisco 860 series (non-VAE)	No USB ports.
Cisco 860VAE series	One USB 1.1-compliant port located on the back panel. The USB port does not support eToken.
Cisco 860VAE-W-A-K9, Cisco 860VAE-W-E-K9, and Cisco 860VAE-POE-W-A-K9 series	For moe information, refer to the "Cisco 860VAE-W-A-K9, Cisco 860VAE-W-E-K9, and Cisco 860VAE-POE-W-A-K9 ISRs" section on page 1-50.
Cisco 880 series	One USB 1.1-compliant port located on the front panel. The USB port provides connection for USB devices such as security tokens and flash memory.
Cisco 890 series[1]	Two USB 2.0-compliant ports located on the front panel.
Cisco 892FSP, Cisco 896VA, Cisco897VA, Cisco 898EA	One USB 2.0-compliant port located on the back panel.

1. Except for Cisco 892FSP, Cisco 896VA, Cisco 897VA, and Cisco 898EA.

Fan

Some router models do not have a fan, while other models have either one or two fans.

The fans spin at full speed, as a diagnostic aid, immediately after the router is powered up. After the router has booted, the fans spin as fast as necessary to minimize fan noise while maintaining a safe internal operating temperature.

The following models have no fan:

- Cisco 892FSP
- Cisco 896VA
- Cisco 897VA
- Cisco 898EA

Power Supply

The Cisco 892FSP has a single +12V power supply input. The Cisco 892FSP power connector is different from the barrel-type connector on other 890 series models. The AC adapter cable connector has four pins and a built-in locking mechanism. Figure 3-33 shows the power adapter connector.

The Cisco 896VA, 897VA, and Cisco 898EA use PoE (12 VDC 43 W, -54 VDC 80 W) and non-PoE (12 VDC 60 W) power supplies.

Power over Ethernet Module

The Cisco 880 series ISRs can include an optional Power over Ethernet (PoE) module that provides power to 802.3af-compliant devices connected to FE ports 0 and 1.

The Cisco 890 series ISRs can include an optional PoE module that provides power to 802.3af-compliant devices connected to FE ports 0, 1, 2, and 3.

The PoE module is an option available only for the Cisco 880 series and 890 series ISRs and requires a 48 V external power adapter.

This function can be added to an 880 or 890 series router by installing the PoE adapter card in the router and inserting the PoE 48 V external power adapter.

Note The Cisco 880 series ISRs with embedded WLAN antennas require a single external power supply: a 30 W power supply for non-POE-enabled routers or a 60 W power supply for POE-enabled routers. For the back panels of some of these routers, see Figure 1-33 and Figure 1-35.

The following PoE budget is available:

- C867VAE-POE-W-A-K9: 15.4 W (one port PoE)
- Cisco 880 series: 30.8 W (2 ports each 15.4 W)
- Cisco 890 series: 61.6 W (4 ports each 15.4 W)

3G Cellular Data WAN Connectivity

The 3G (Evolution Data Only [EVDO], Universal Mobile Telecommunications Systems [UMTS]) cellular interface is intended for use as a backup data link, but it can also be used as a primary WAN data link. The 3G technology is third-generation wide-area cellular technology that is used in voice telephony and broadband wireless data in a mobile environment.

Some Cisco 880G models come with a 34-mm express card slot ready for use with a commercial 3G card radio. The 3G express card slot is located on the front panel. For a list of supported 3G cards, see the *Cisco 880 Series Integrated Services Routers Data Sheet*.

Other Cisco 880G models come with embedded WAN modems for use over GSM or CDMA networks. These routers have antenna connectors on the back panel. GSM routers have two SIM card slots. For information on configuring Cisco 880 series ISRs for 3G, see *Configuring Cisco EHWIC and 880G for 3G (EV-DO Rev A)* and *Configuring Cisco EHWIC and 880G for 3.7G (HSPA+)/3.5G (HSPA)*.

Wireless LAN Connectivity

The embedded Wi-Fi CERTIFIED™, 802.11a/b/g/n-compliant wireless AP is preinstalled in the router as an optional feature. The Cisco 860 series routers support autonomous features and network configurations. The Cisco 880 series and 890 series routers support both autonomous and unified features and network configurations.

The wireless AP does not have an external Console port. Use the router's Console port as described in Chapter 3, "Connecting the Router." To configure the wireless device, use the Cisco IOS command-line interface (CLI).

Table 1-51 describes the radios and antennas for the Cisco 860 series, 880 series, and 890 series routers.

Note Cisco 860VAE ISRs do not support wireless LAN connectivity.

The 5-GHz radio operates in the Unlicensed National Information Infrastructure (UNII) 1, 2, 3, 5-GHz frequency bands.

Table 1-51 Wireless Device Radios and Antennas

Radio Module	Platform	Radio Band	Maximum Data Throughput[1]	Mode	Antenna
Single-band 802.11b/g/n draft 2.0 radio module	Cisco 860 and 880 series routers **Note** Cisco 860VAE ISRs do not support wireless LAN connectivity.	2.4 GHz	Up to 100 Mb/s	Cisco 860 series: autonomous only Cisco 880 series: autonomous and unified	Three captive, omnidirectional dipole antennas: 2 dBi at 2.4 GHz

Table 1-51 Wireless Device Radios and Antennas

Radio Module	Platform	Radio Band	Maximum Data Throughput[1]	Mode	Antenna
Single-band 802.11b/g/n radio module	Cisco 880 series routers with embedded WLAN antennas	2.4 GHz	100 Mb/s per radio, up to 200 Mb/s total	Autonomous and unified	Three embedded, omnidirectional antennas: 2 dBi at 2.4 GHz
Dual-band 802.11a/n and 802.11b/g/n radio modules		2.4 GHz and 5 GHz			Three embedded, dual-band, omnidirectional antennas: 2 dBi at 2.4 GHz and 5 dBi at 5 GHz
Dual-band simultaneous 802.11a/n and 802.11b/g/n radio modules	Cisco 890	2.4 GHz and 5 GHz	100 Mb/s per radio, up to 200 Mb/s total	Autonomous and unified	Three dual-band, removable, 2.4-GHz/5-GHz omnidirectional dipole RP-TNC antenna[2]

1. Actual data rate is highly dependent on your wireless environment.
2. The antennas require some minor installation. They must be screwed onto the RP-TNC antenna connectors on the I/O side of the chassis. See the following document on Cisco.com for feature information: http://www.cisco.com/en/US/docs/routers/access/wireless/hardware/notes/antdip.html

Supported Cisco Radio Antennas

The Cisco 891, Cisco 892, and Cisco 892F come with three removable dipole antennas that can be replaced using the Cisco approved antenna extenders listed in Table 1-52.

Note Cisco supports only the antennas listed in Table 1-52 with the Cisco 890 series dual-band radio module.

Table 1-52 Cisco Antennas Supported on the Cisco 890 Series ISRs

Cisco Part Number	Antenna Type	Maximum Gain	Description
AIR-ANTM2050D-R	Omnidirectional	2.0 dBi at 2.4 GHz 5.0 dBi at 5 GHz	This is the default antenna. It is a swivel-mount dipole dual-band blade antenna. For more information, see *Cisco Multiband Swivel-Mount Dipole Antenna (AIR-ANTM2050D-R)*.
AIR-ANTM4050V-R	Omnidirectional	4.0 dBi at 2.4 GHz 5.0 dBi at 5 GHz	Ceiling-mount dual-band antenna. This antenna has a clip that allows it to be mounted on a drop-ceiling cross member. For more information, see *Cisco Multiband Diversity Omnidirectional Ceiling-Mount Antenna*.
AIR_ANTM5560P-R	Patch	5.5 dBi at 2.4 GHz 6.0 dBi at 5 GHz	Wall-mount dual-band antenna. For more information, see *Cisco Multiband Wall-Mount, Corner-Mount, or Mast-Mount Antenna*.

Small Form-Factor Pluggable Port

The SFP port supports auto-media-detection, auto-failover, and remote fault indication (RFI), as described in the IEEE 802.3ah specification.

See the Cisco 892F data sheet for a list of supported SFPs.

Feature Summary

Table 1-53 summarizes the hardware features available in the Cisco 860 series, Cisco 880 series, and Cisco 890 series ISRs.

Table 1-53 Hardware Features Available in Cisco 860 Series, Cisco 880 Series, and Cisco 890 Series ISRs

Feature	Description	860 Series	880 Series	890 Series
Reset button	Resets the router configuration to the factory default.	All models	All models	All models
	Resets the router configuration to customer configuration.	866VAE, 867VAE, 866VAE-K9, 867VAE-K9	—	—
FE[1] built-in switch ports	Provides connection to 10/100BASE-T (10/100-Mb/s) Fast Ethernet networks. The autosensing function in these routers eliminates the need for a crossover cable and enables the router to detect MDI[2] or MDIX[3] in any other PC or hub with a straight-through cable or a crossover cable.	All models	All models	891, 892, 892F
GE[4] built-in switch port	Provides connection to 10/100/1000BASE-T (10/100/1000-Mb/s) Gigabit Ethernet networks. The autosensing function in these routers eliminates the need for a crossover cable and enables the router to detect MDI[5] or MDIX[6] in any other PC or hub with a straight-through cable or a crossover cable.	866VAE-K9, 867VAE-K9	—	892FSP, 896VA, 897VA, 897VAB, 897VAM, 897VAW, 897VAMW, 898EA
Console or AUX port	Provides a connection to the terminal or PC for software configuration or troubleshooting. The Console port may be configured as a virtual auxiliary port for dial backup and remote management. Cisco 891, Cisco 892, and Cisco 892F have separate console and auxiliary ports. Cisco 892FSP has combined console and auxiliary port.	All models	All models	All models
Security features	Provides support for VPNs[7], Cisco IOS Firewall, and IPSec[8]. The Cisco 880 series routers also provide URL filtering.	861, 867, 866VAE-K9, 867VAE-K9	All models	All models

Table 1-53 Hardware Features Available in Cisco 860 Series, Cisco 880 Series, and Cisco 890 Series ISRs (continued)

Feature	Description	860 Series	880 Series	890 Series
Embedded wireless AP	Provides Wi-Fi CERTIFIED™ 802.11a/b/g/n compliance. The Cisco 860 series routers contain a single 802.11b/g/n radio. Some Cisco 880 series routers contain a single 802.11b/g/n radio while others contain dual 802.11a/n and 802.11b/g/n radios. The Cisco 890 series routers contain dual 802.11b/g/n and 802.11a/n radios.	Wireless models 802.11b/g/n	Wireless models 802.11b/g/n[9] and 802.11a/n[10]	Wireless models 802.11b/g/n and 802.11a/n
FE WAN port	Provides connection to 10/100BASE-T. Can be connected to other network devices, such as a cable modem, an xDSL[11] modem, or router. The router is capable of bridging and multiprotocol routing between the LAN and WAN ports.	861	881	891, 892, 892F
GE WAN port	10/100/1000 GE WAN Port.	866VAE, 867VAE, 866VAE-K9, 867VAE-K9	—	All models
VDSLoPOTS[12] port	Provides connection to a VDSL network.	—	887V	—
ADSLoPOTS	Provides ADSL connection over basic telephone service with Annex A and Annex B ITU G. 992.1 (ADSL), G.992.3 (ADSL2), and G.992.5 (ADSL).	—	—	—
ADSLoISDN	Provides ADSL connection over ISDN.	—	—	—
DSL Multi-mode (VDSL and ADSL2/2+)	Provides ADSL2/2+ or VDSL connection over POTS or ISDN (ISDN on 886VA only).	866VAE, 867VAE, 866VAE-K9, 867VAE-K9	886VA, 887VA,887VA-M	892FSP, 896VA, 897VA, 897VAB, 897VAM, 897VAW, 897VAMW, 898EA
Real-time clock (RTC)	RTC provides nonvolatile date and time when the router is powered on. The RTC is used for verifying the validity of the Certification Authority stored on the router. It is backed up by a nonreplaceable lithium battery.	866VAE, 867VAE, 866VAE-K9, 867VAE-K9	All models	All models

Table 1-53 Hardware Features Available in Cisco 860 Series, Cisco 880 Series, and Cisco 890 Series ISRs (continued)

Feature	Description	860 Series	880 Series	890 Series
USB port,	Supports USB 1.1. Provides connection for USB devices such as security tokens and flash memory. The Cisco 880 series routers have a single USB port; the Cisco 890 series routers have two USB ports. Cisco 880 series routers with embedded WLAN antennas have one USB 2.0 port. Cisco 892FSP and Cisco 860VAE series routers have one USB 2.0 port on the rear panel for temporary installation of a Cisco-approved USB memory device for maintenance purposes only. The port supports only USB 2.0. Refer to the product datasheet for the list of supported USB flash memory devices. **Note** Cisco 860VAE series router USB port does not support eToken.	866VAE, 867VAE, 866VAE-K9, 867VAE-K9	All models	All models
PoE[13]	(Optional) Provides power for 802.3af-compliant devices (such as phones) that are connected to the router. The Cisco 880 series routers support a 2-port PoE module; the Cisco 890 series routers support a 4-port PoE module.	—	Models with PoE	Models with PoE
G.SHDSL[14] port	Provides 2-wire or 4-wire connection to a G.SHDSL network.	—	888	898EA
3G[15] card slot	Provides backup data link.	—	3G models	—
Dying gasp	Detects when the router is losing power, and sends a power-fail signal to warn the DSLAM[16] about the impending line drop.	866VAE, 867VAE, 866VAE-K9, 867VAE-K9, xDSL models	888EA, xDSL models	892FSP, 896VA, 897VA, 897VAB, 897VAM, 897VAW, 897VAMW, 898EA
Data BRI port	Provides backup and remote management functions by connecting to the ISDN service provider if the main VDSL or G.SHDSL link fails.	—	xDSL models, except for the 3G and SRST[17] models	892, 897VAB
V.92 modem	Provides dial backup and remote management functions if the main WAN link fails.	—	—	891
FXO[18] port	An FXO interface connects local calls to a central office or PBX. This is the interface a standard telephone provides.	—	881 SRST	—
FXS[19]/DID[20] port	An FXS interface connects directly to a standard telephone, fax machine, or similar device. This interface supplies ringing voltage and dial tone to the station.	—	SRST models	—

Table 1-53 Hardware Features Available in Cisco 860 Series, Cisco 880 Series, and Cisco 890 Series ISRs (continued)

Feature	Description	860 Series	880 Series	890 Series
BRI voice port	The ISDN BRI S/T voice interface provides a client-side (TE) ISDN S/T physical interface for connection to an NT1 device that terminates an ISDN telephone network.	—	887V	—
SFP[21] port	Supports auto-media-detection, auto-failover, and remote fault indication (RFI), as described in the IEEE 802.3ah specification. See the Cisco 892F data sheet for a list of supported SFPs.	—	—	892F models, 892FSP, 896VA, 897VA, 897VAB, 897VAM, 897VAW, 897VAMW, 898EA

1. FE = Fast Ethernet.
2. MDI = media-dependent interface in normal mode.
3. MDIX = media-dependent interface in crossover mode.
4. GE = Gigabit Ethernet.
5. MDI = media-dependent interface in normal mode.
6. MDIX = media-dependent interface in crossover mode.
7. VPN = Virtual Private Network.
8. IPsec = IP security.
9. This applies to most models of the Cisco 880 series routers.
10. This applies to Cisco 880 series routers with embedded, wireless antennas.
11. xDSL = General term referring to various forms of DSL, including ADSL (asymmetric digital subscriber line), VDSL (very-high-data-rate digital subscriber line), and G.SHDSL.
12. VDSLoPOTS = very-high-data-rate digital subscriber line 2 over plain old telephone service.
13. PoE = Power over Ethernet. This function can be added to an 880 or 890 series router by installing the PoE adapter card in the router and inserting the PoE 48-V external power adapter.
14. G.SHDSL = (global industry standard) symmetrical high-speed DSL.
15. 3G = Third-Generation.
16. DSLAM = digital subscriber line access multiplexer.
17. SRST = Survivable Remote Site Telephony.
18. FXO = Foreign Exchange Office.
19. FXS = Foreign Exchange Station.
20. DID = Direct Inward Dialing.
21. SFP = small-form-factor pluggable.

Installing the Router

This chapter describes the equipment and the procedures for successfully installing the Cisco 860, 880, 890 ISRs, Cisco 819 ISRs, and the Cisco 812 ISRs, and contains the following sections:

- Installing the Cisco 810 ISR, page 2-1
- Installing the Cisco 860, 880, 890 ISR, page 2-43

Installing the Cisco 810 ISR

This section contains the following:

- Installing the Cisco 812 ISR, page 2-1
- Installing the Cisco 819 ISR, page 2-19

Installing the Cisco 812 ISR

This section describes the equipment and the procedures for successfully installing Cisco 812 ISR and contains the following sections:

- Items Shipped with your Router, page 2-2
- Items Shipped with your PoE+ Splitter, page 2-2
- Installing the Cisco PoE+ Splitter, page 2-2
- Installing the SIM Card, page 2-6
- Installing the 3G Antenna, page 2-8
- Mounting the Cisco 812 ISR, page 2-9

Warning **Installation of the equipment must comply with local and national electrical codes.** Statement 1074

Warning **Voltages that present a shock hazard may exist on Power over Ethernet (PoE) circuits if interconnections are made using uninsulated exposed metal contacts, conductors, or terminals. Avoid using such interconnection methods, unless the exposed metal parts are located within a restricted access location and users and service people who are authorized within the restricted access location are made aware of the hazard. A restricted access area can be accessed only through the use of a special tool, lock and key or other means of security.** Statement 1072

Items Shipped with your Router

Unpack the box and verify that all items listed on the invoice were shipped with the Cisco 812 ISR.

The following items are shipped with your router:

- AC power adapter
- Accessory kit 53-3453-01 which contains the following:
  - Pointer document 78-19961-01
  - RCSI document 78-17665-05
- Mounting bracket kit C810-BR-CM
  - Includes screws needed for the installation
- Two 3G Dipole antennas

Items Shipped with your PoE+ Splitter

Unpack the box and verify that all items listed on the invoice were shipped with the Cisco PoE+ splitter (C810-POE-SPL).

The following items are shipped with your PoE+ splitter:

- GE Cat5 cable
- Power cable
- Power cord lock
- Screws needed for the installation
- Shelf bracket

Note The above items are acceptable for use in Plenums and Air-handling spaces.

Installing the Cisco PoE+ Splitter

The PoE+ splitter (C810-POE-SPL) is an optional accessory that is intended to be mounted to the ceiling tile rails (24 inches span) using the only supported box hanger available from a Cooper B-line BA50 distributor. The screws, cables, and power cord lock needed for the installation are included in the PoE+ splitter accessory kit. A 5 VDC power cable with 1.3 meters in length connects the 5 VDC output of the PoE+ splitter to the router power input.

To install the Cisco PoE+ splitter, perform these steps:

Step 1 Secure the PoE+ splitter mounting plate into the rail from the BA50 with two 10-24 screws (see Figure 2-1).

Figure 2-1 10-24 Screws

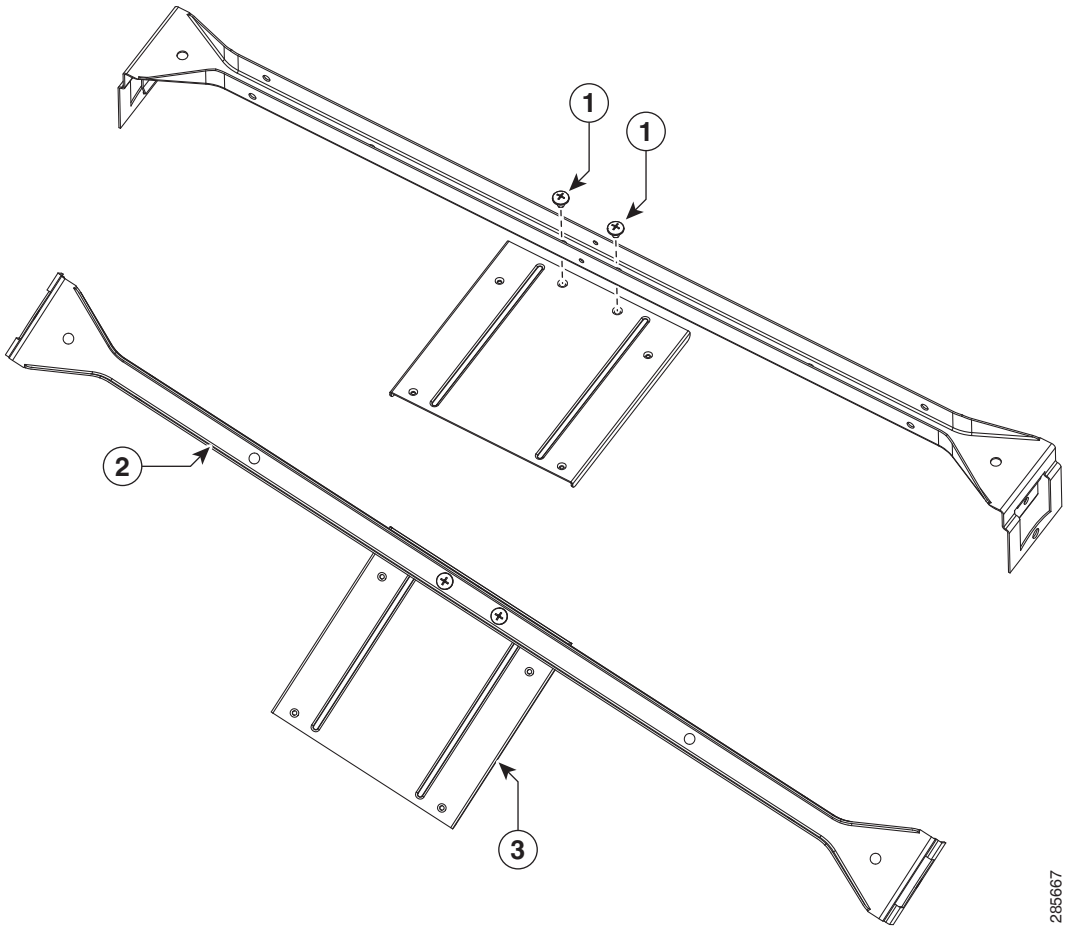

1	10-24 screws
2	Box hanger
3	Shelf bracket (PID 700-39491-01)

Step 2 Install the PoE+ splitter into the mounting plate with four 6-32 screws. (See Figure 2-2.)

Figure 2-2 6-32 Screws

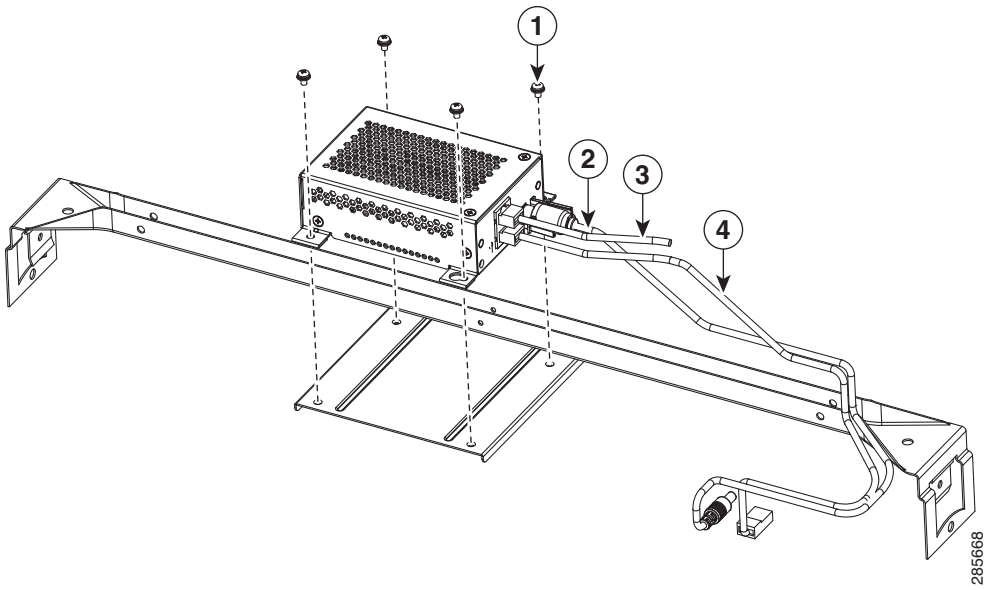

1	6-32 screws	**3**	To PoE+ power source
2	Power cable with power cord lock installed	**4**	GE CAT5 cable

Step 3 Connect the supplied plenum rated Cat5 cable to the GE0 port on the PoE+ splitter.

Step 4 Connect the Cat5 cable from your PoE+ source to the PoE+ in port on the PoE+ splitter.

Step 5 Place the power cord lock onto the power cord behind the connector overmold as shown in Figure 2-3. Slide the power cord lock forward so that it captures the overmold and is fully seated.

Figure 2-3 Placement of the Power Cord Lock onto the Power Cord

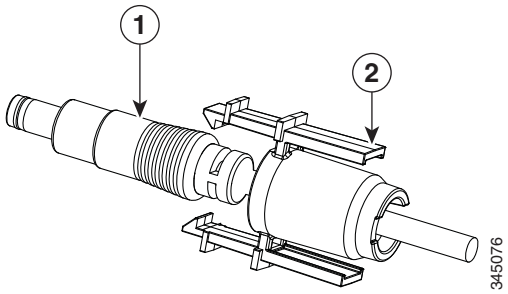

1	Power cord connector
2	Power cord lock

Step 6 Install the power cord with power cord lock to the power jack of the PoE+ splitter while making sure that the two arms of the power cord lock slide into the corresponding slots on the PoE+ splitter and are fully seated with both arms locking into the slots. Figure 2-4 shows the installation of the power cord lock and other cables.

In the event that the power cord lock needs to be removed, user your thumb and index fingers to squeeze the ends of the tabs while pulling away from the PoE+ splitter.

Figure 2-4 Installation of the Power Cord Lock and Other Cables

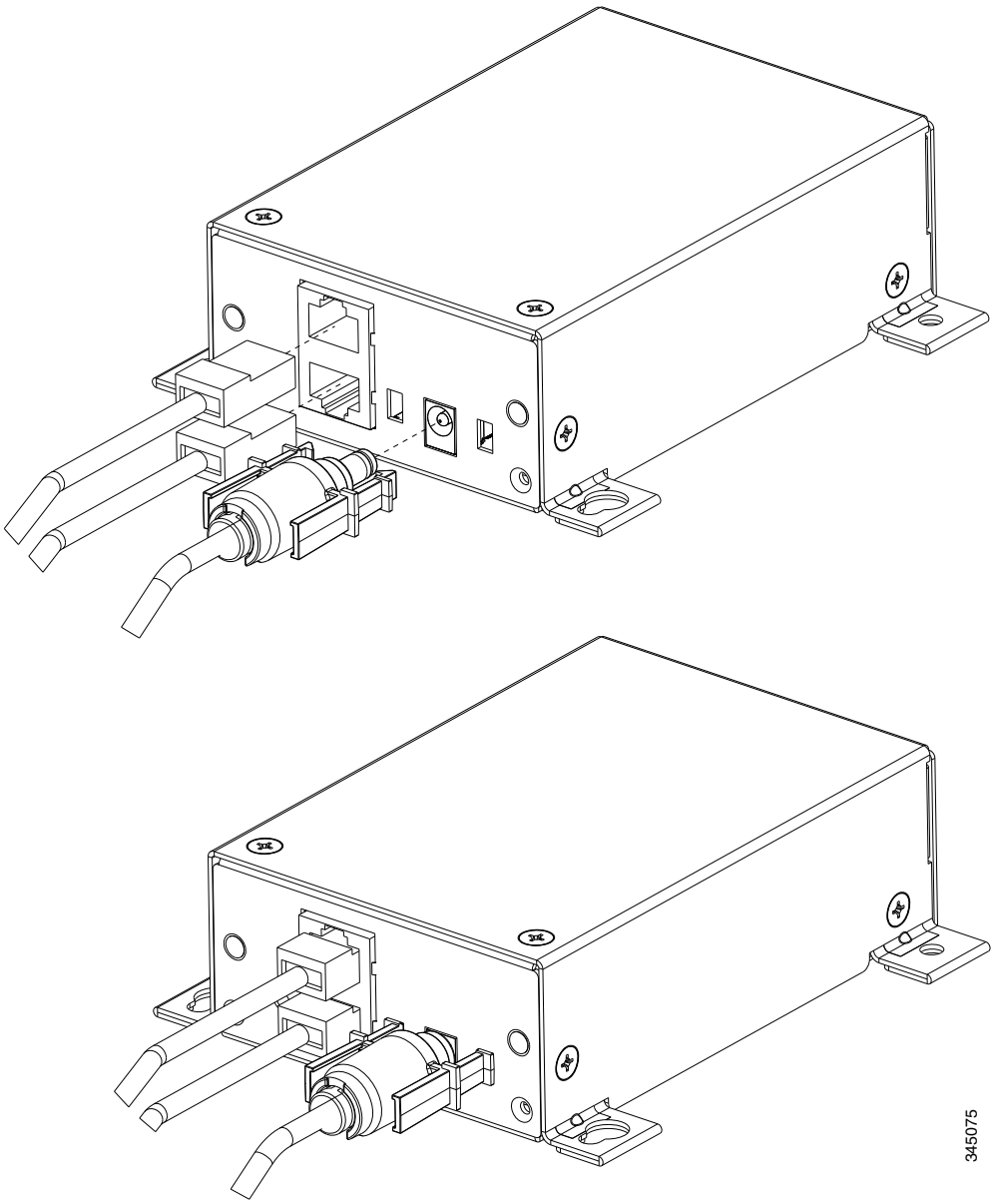

Step 7 Remove one ceiling tile to gain access.

Step 8 Install the pre-assembled rail with PoE+ splitter into the T-rail. Push down the box hanger mounting clips to lock into the T-rail as shown in Figure 2-5.

Figure 2-5 T-Rail

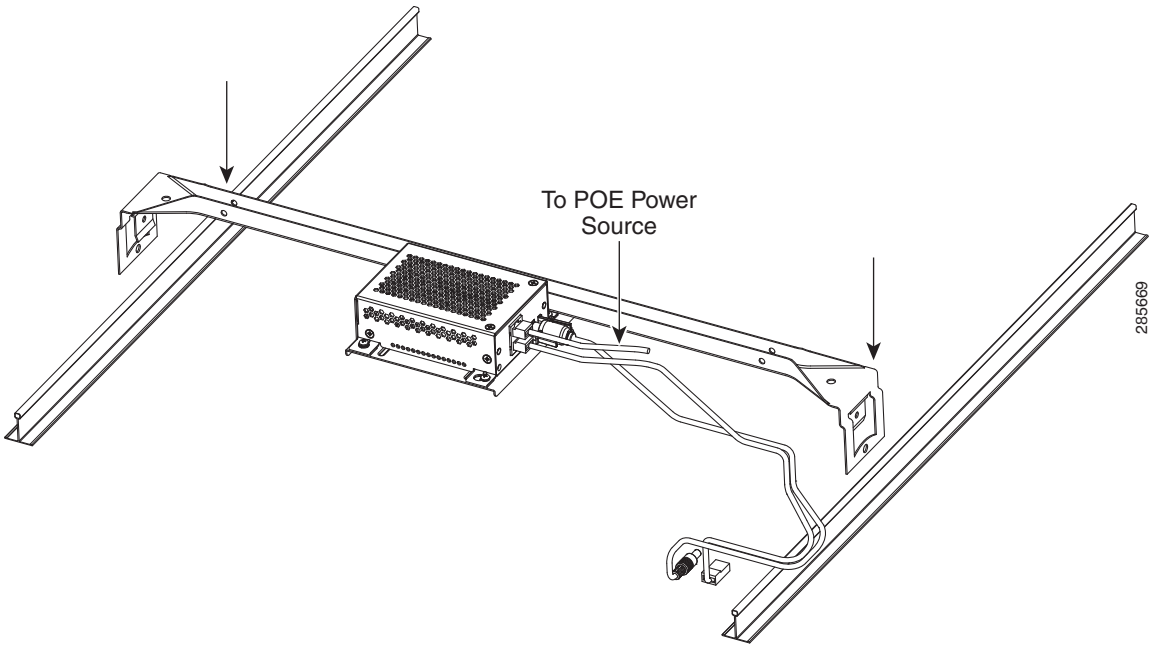

Installing the SIM Card

This section describes how to install and replace the SIM card. Ensure that the router is not mounted to a wall, rack, or DIN rail.

Caution Do not touch any part of the exposed PCB circuit area when the SIM cover is removed.

Warning **Hot surface.** Statement 1079

To install the SIM card, perform these steps:

Step 1 Power off the router and disconnect the power cable from the power source.

Step 2 Place the router on a sturdy solid surface and orient the SIM access panel up to gain access. Ensure that any installed antennas are oriented appropriately to avoid damage.

Step 3 Remove the SIM access panel being held in place by four 6-32 screws. (See Figure 2-6).

Figure 2-6 Accessing the SIM Card

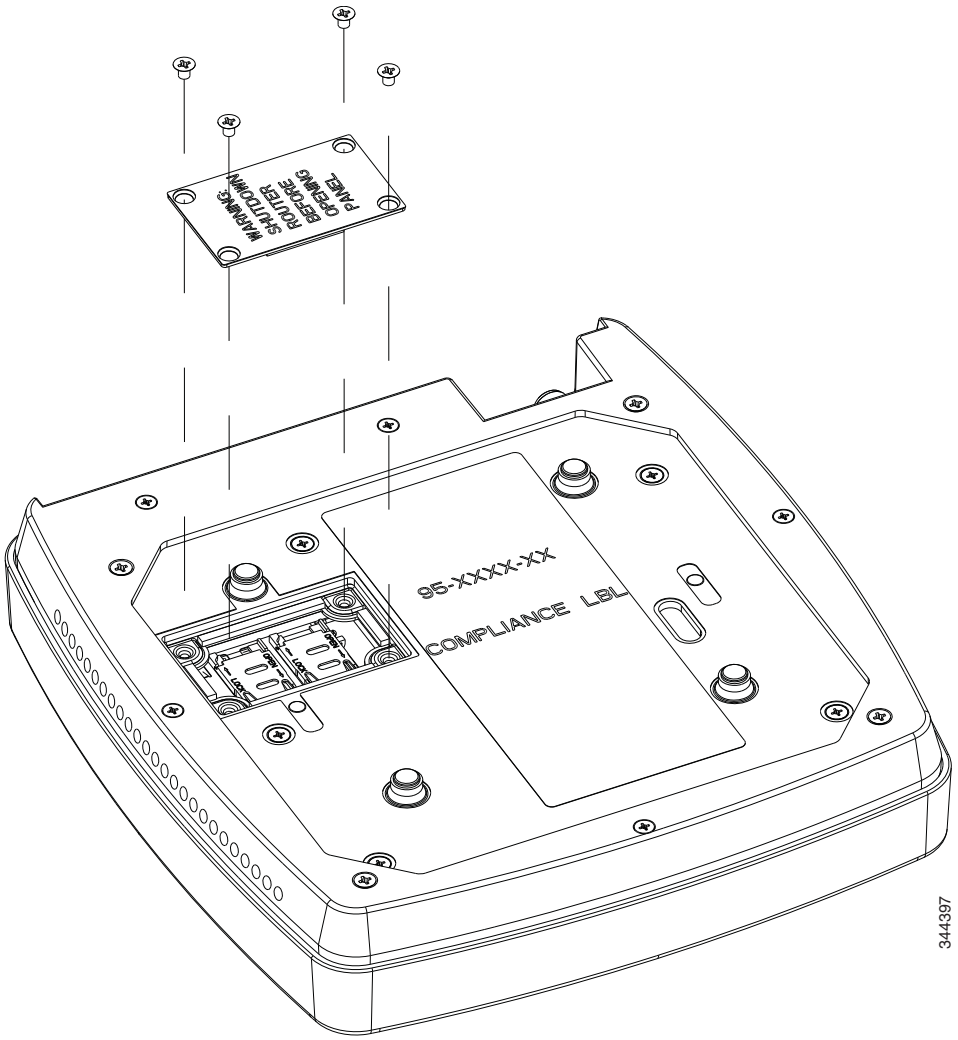

Step 4 Remove the SIM card and install the new cards.

Step 5 Reinstall the same 6-32 flat head screws using a screw driver to secure the access panel back in place. Figure 2-7 shows the SIM card installed and the SIM access panel closed.

Figure 2-7 SIM Access Panel

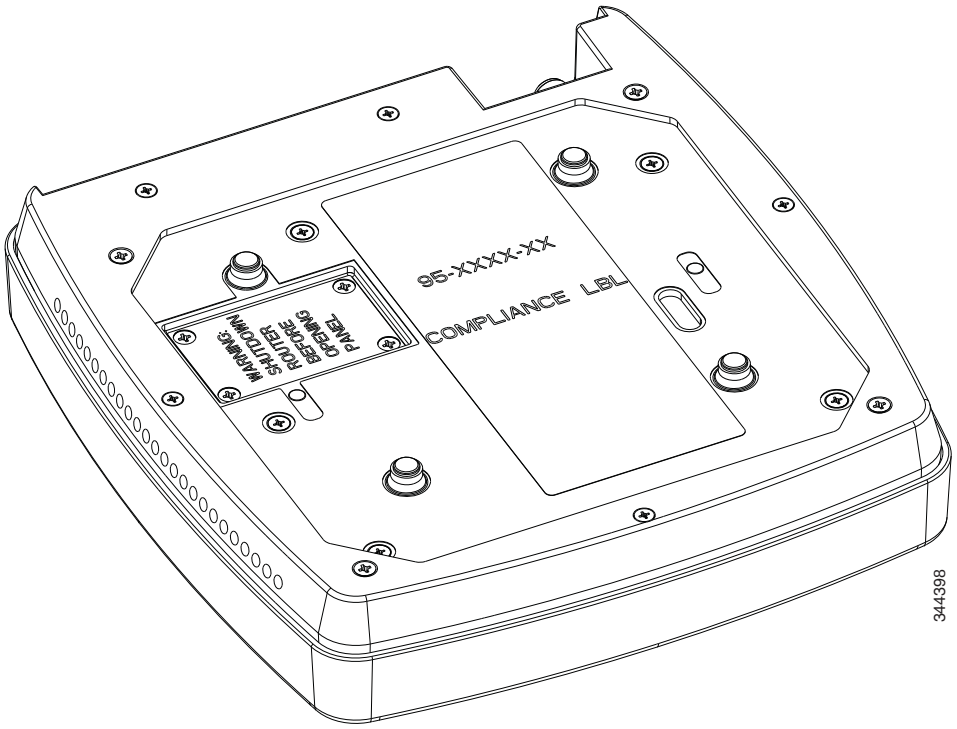

Installing the 3G Antenna

Note Install the antenna before you mount the Cisco 812 ISR.

Warning **Do not locate the antenna near overhead power lines or other electric light or power circuits, or where it can come into contact with such circuits. When installing the antenna, take extreme care not to come into contact with such circuits, because they may cause serious injury or death. For proper installation and grounding of the antenna, please refer to national and local codes (for example, U.S.:NFPA 70, National Electrical Code, Article 810, Canada: Canadian Electrical Code, Section 54).** Statement 1052

To install the 3G antennas to the router, perform these steps:

Step 1 Manually screw the antenna tight to the TNC connectors on the far left corner of the front panel.

Note It may be easier to straighten out the antenna before attaching it to the TNC connector and then bend it back to the desired orientation once it is tight.

Figure 2-8 Installing the 3G Antenna

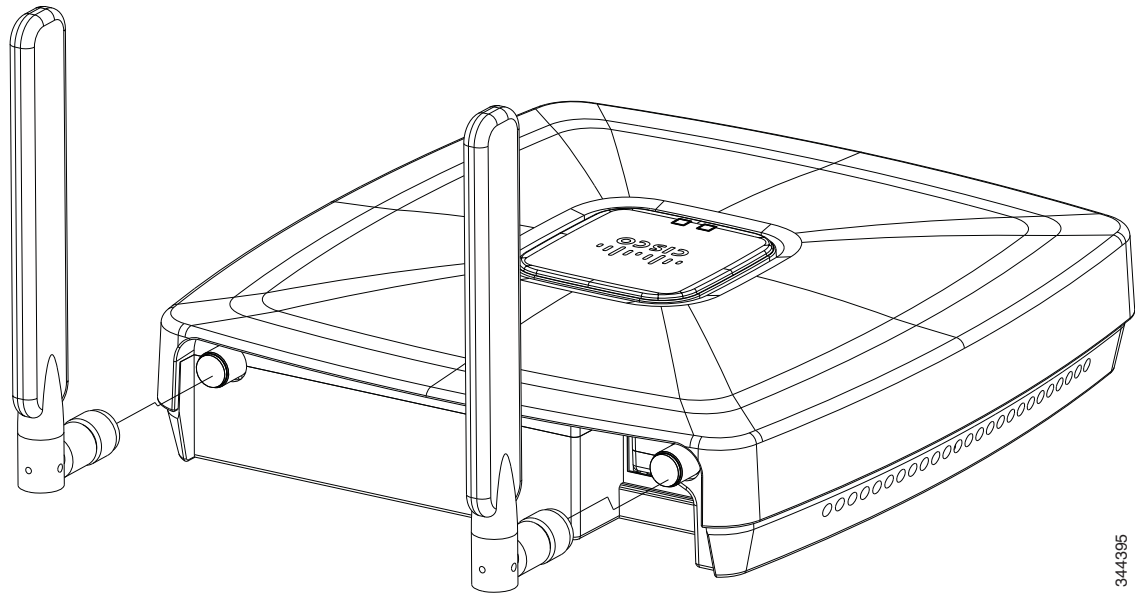

Step 2 Orient the antenna perpendicular with respect to the floor. Figure 2-9 shows the 3G antenna installed.

Figure 2-9 3G Antenna Installed

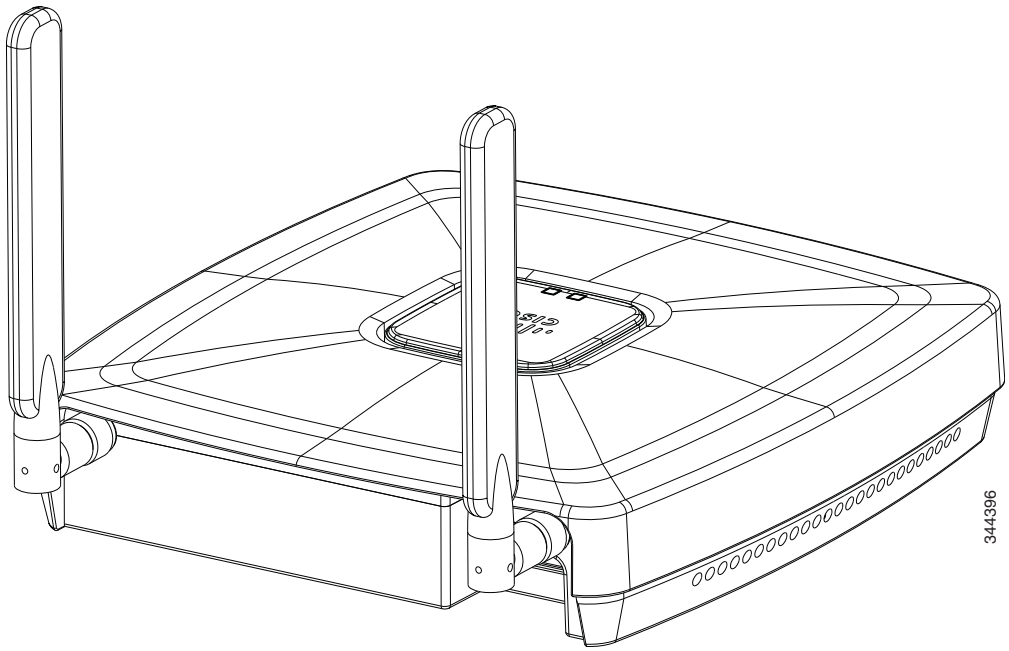

Mounting the Cisco 812 ISR

This section describes the steps in mounting the Cisco 812 ISR in several configurations, including on a suspended ceiling, on a hard ceiling or wall, and on an electrical or network box. This section contains the following topics:

- Mounting Hardware, page 2-10

- Mounting Bracket, page 2-10
- Ceiling Grip Clips, page 2-11
- Mounting the Cisco 812 ISR Below a Suspended Ceiling, page 2-13
- Mounting the Cisco 812 ISR on a Hard Ceiling or a Wall, page 2-15
- Mounting the Cisco 812 ISR to a Network or Electrical Box, page 2-17
- Grounding the Cisco 812 ISR, page 2-18

Mounting Hardware

Mounting hardware for the Cisco 812 ISR consists of brackets, which connect to the bottom of the router, and ceiling grid clips, which connect the bracket to a suspended ceiling. The bracket that you need depends on the mounting location for the router. The ceiling grid clip that you need depends on the type of suspended ceiling where you need to install the router. You do not need ceiling grid clips if you are mounting the router to a hard-surface ceiling or a wall.

Mounting Bracket

The Cisco 812 ISR has only one mounting bracket. The C810-BR-CM universal bracket is versatile. It works with electrical boxes, can be used for wall mounting, and adapts to ceiling installations. Figure 2-10 shows the universal bracket installed on the Cisco 812 ISR.

Figure 2-10 Universal Bracket Installed on the Cisco 812 ISR

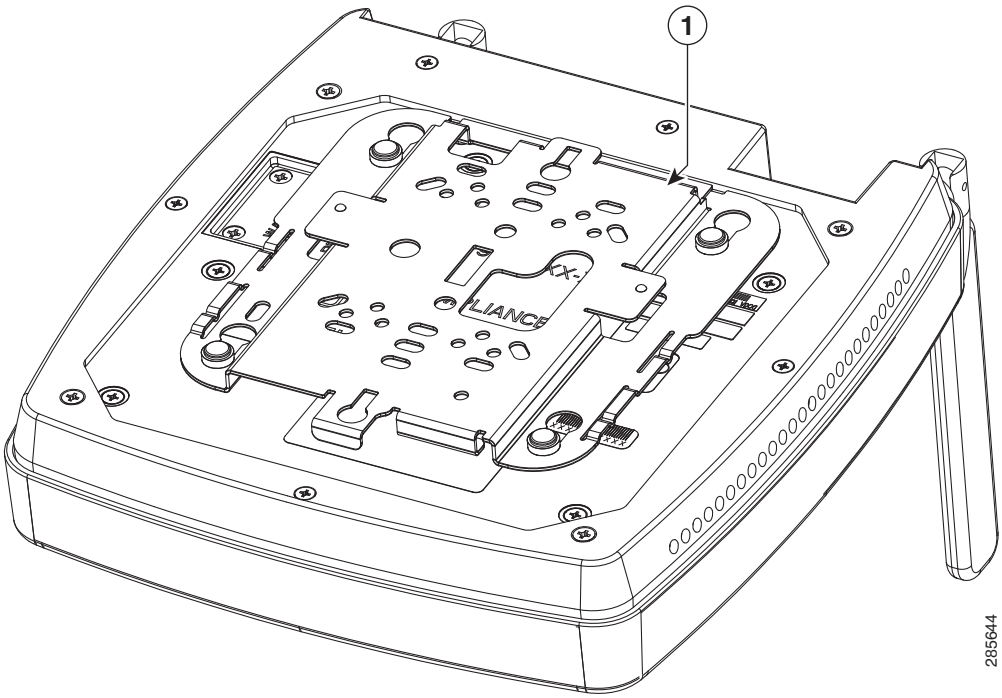

1	Universal bracket

Ceiling Grip Clips

Use a ceiling grid clip to mount the router on a suspended ceiling. The ceiling grid clip that you need depends on the ceiling tiles on your ceiling. There are two types of ceiling grid clips:

- Ceiling Grid Clip, Recessed (AIR-AP-T-RAIL-R)—If your ceiling tiles hang below the ceiling grid, this clip provides the best fit between the router and the ceiling.
- Ceiling Grid Clip, Flush (AIR-AP-T-RAIL-F)—If your ceiling tiles are flush with the ceiling grid, this clip provides a snug fit between the router and the ceiling.

The standard 9/16, 15/16, and 1 ½-inch wide T-rail mounting are supported with the Ceiling Grip Clips.

Figure 2-11 shows a ceiling grid clip.

Figure 2-11 Ceiling Grid Clip

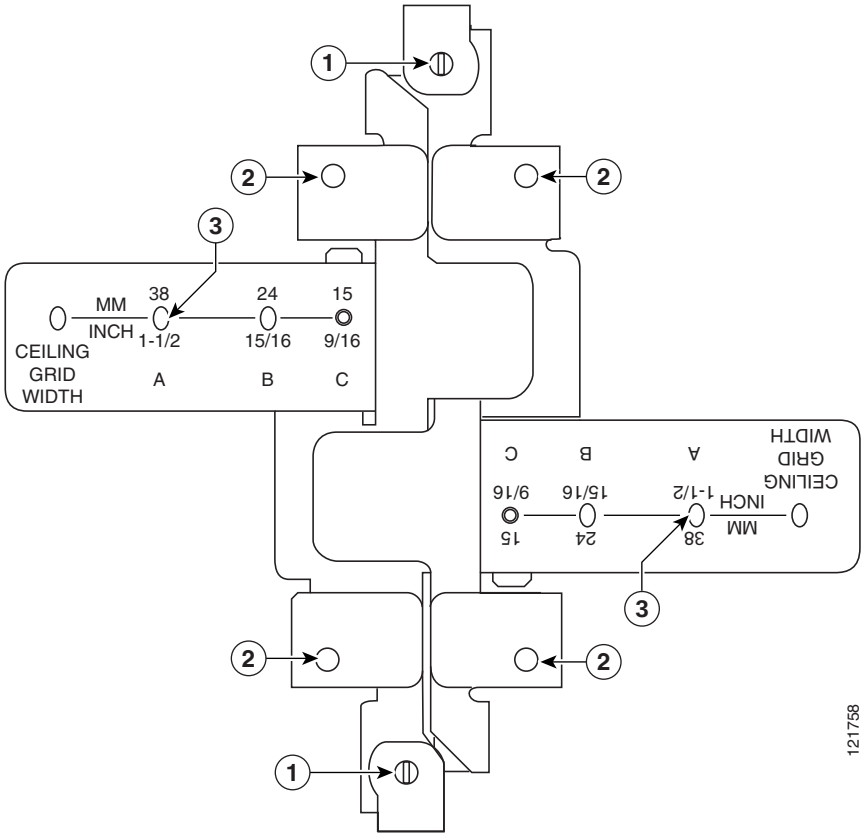

1	Locking screws	3	T-rail width detents (A, B, or C)
2	Bracket screw holes		

Additional Adapters for Channel and Beam Ceiling Rails

The most common type of suspended ceiling support rail (the support for the ceiling tiles) is the ceiling Tile rail or T-rail for short. You can attach a ceiling grid clip directly to a T-rail ceiling rail. However, other types of ceiling rails, such as channel rails and beam rails, require an additional adapter clip (AIR-CHNL-ADAPTER). You need two adapter clips for each router. Set screws on the clips hold them securely on the ceiling rail.

Figure 2-12 shows the three types of ceiling rails: T-rail, channel, and beam. Figure 2-13 shows the Cisco Access Point installed with mounting bracket, ceiling grid clip, and adapter clips.

Figure 2-12 T-Rail, Channel, and Beam Ceiling Rail Types

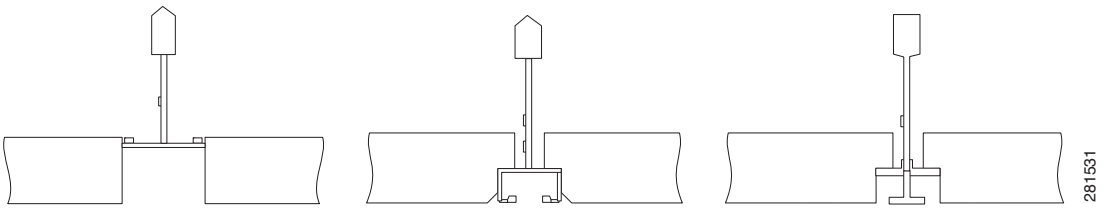

Figure 2-13 Adapter Clips Installed with Ceiling Grid Clips

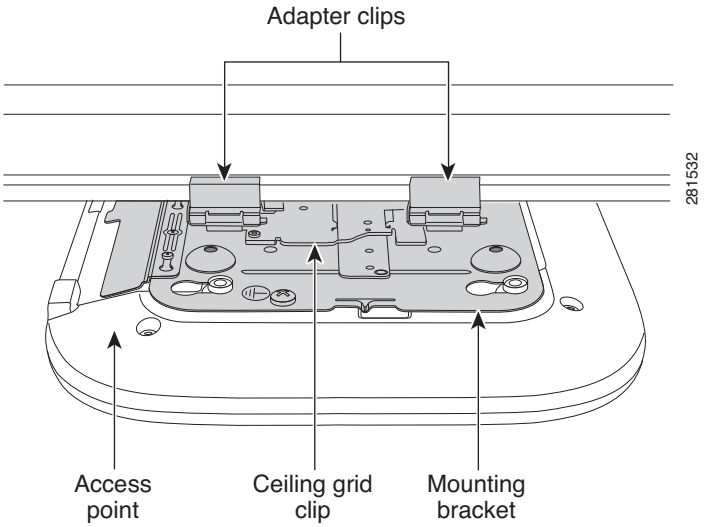

Mounting the Cisco 812 ISR Below a Suspended Ceiling

The recommended power option for the Cisco 812 ISR, when mounted below a suspended ceiling, is the Cisco C810-POE-SPL (PoE+ splitter) with the use of the supplied 1.3 meter power cable and Cat5 cable (Plenum rated). The cables can be hidden above the suspended ceiling for a clean installation. See the "Installing the Cisco PoE+ Splitter" section on page 2-2 for details on installing the PoE+ splitter.

Use a flat screwdriver if there is a need to remove the GE/console cables.

To mount the Cisco 812 ISR below a standard or recessed suspended ceiling, perform these steps.

Step 1 Decide where you want to mount the router on your suspended ceiling.

Step 2 Open the ceiling grid clip completely.

Step 3 Place the ceiling grid clip over the T-rail and close it to the appropriate detent (A, B, or C).

Step 4 Use a screwdriver to tighten the two ceiling grid clip locking screws to prevent the clip from sliding along the T-rail.

Step 5 Observe the ceiling grid clip width detent letter (A, B, or C) that corresponds to the T-rail width.

Step 6 Align the corresponding holes (A, B, or C) on the mounting bracket over the mounting holes on the ceiling grid clip.

Step 7 Hold the mounting bracket and insert a 6-32 x 0.18-inch screw into each of the four corresponding holes (A, B, or C) and tighten.

Step 8 If necessary, drill or cut a cable access hole in the ceiling tile large enough for the Ethernet and power cables. Pull the cables through the access hole until you have about 1 foot of cable protruding from the hole.

Step 9 (Optional). Use the ground screw to ground the router to a suitable building ground. See the "Grounding the Cisco 812 ISR" section on page 2-18 for general grounding instructions.

Step 10 Connect the Ethernet and power cables to the router.

Step 11 Align the router feet over the keyhole mounting slots on the mounting bracket. If you created a hole for the cables, make sure the router is positioned so that the cables reach their respective ports.

Step 12 Gently slide the router onto the mounting bracket until it clicks into place. Figure 2-14 shows the Cisco 812 ISR mounted on a T-rail ceiling rail using a ceiling grid clip.

Figure 2-14 Suspended Ceiling Mounting Details

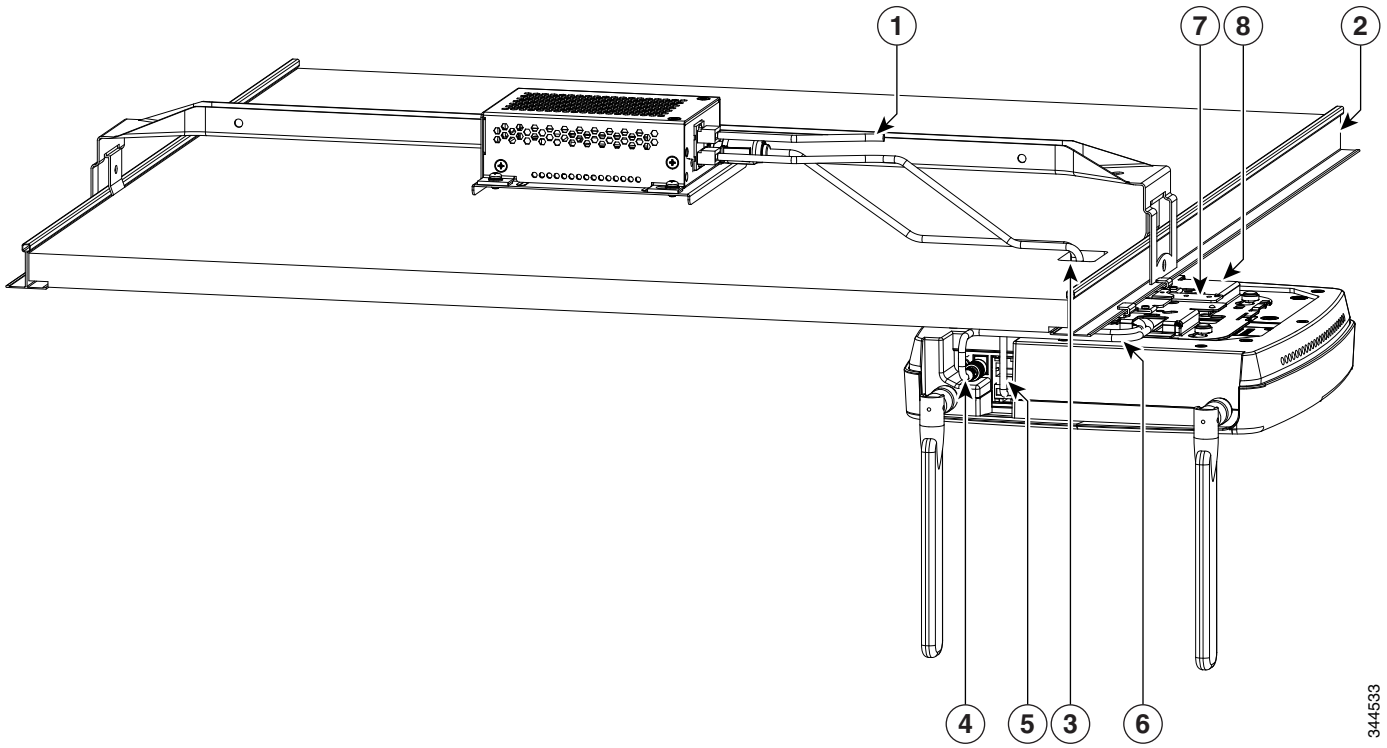

1	To PoE+ power source	5	GE CAT5 cable to PoE+ splitter
2	Ceiling T-rail	6	Power and GE cable routed through a ceiling mounting bracket and into the router so that the cabling is hidden from directly below
3	Ceiling tile with opening cut for cables	7	Ceiling grip clip
4	Power cable to PoE+ splitter	8	Ceiling mount bracket

Mounting the Cisco 812 ISR on a Hard Ceiling or a Wall

This procedure describes the steps required to mount the Cisco 812 ISR on a ceiling constructed of 3/4-inch (19.05 mm) or thicker plywood using #8 fasteners using the universal mounting bracket (C810-BR-CM).

Note The Cisco 812 ISR integrated antennas perform best when the router is mounted on horizontal surfaces such as a table top or ceiling. For advanced features such as voice, location, and router detection, ceiling mounting is strongly recommended. However, for smaller areas such as conference rooms, kiosks, transportation environments, or hot-spot usage where data coverage is the primary concern, the unit may be wall mounted using wall anchors or screws.

Note Wall mounting is only supported with the I/O (antenna) side facing up.

Step 1 Use the mounting bracket as a template to mark the locations of the mounting holes on the bracket. Figure 2-15 shows details of the mounting bracket.

Caution Be sure to mark all four locations. To ensure a safe and secure installation, make sure you are using adequate fasteners and mount the router using no less than four fasteners.

Caution Do not use plastic wall anchors for ceiling installations. When mounting the router on a hard ceiling, use four fasteners capable of maintaining a minimum pullout force of 20 lbs (9 kg).

Figure 2-15 Universal Mounting Bracket Details

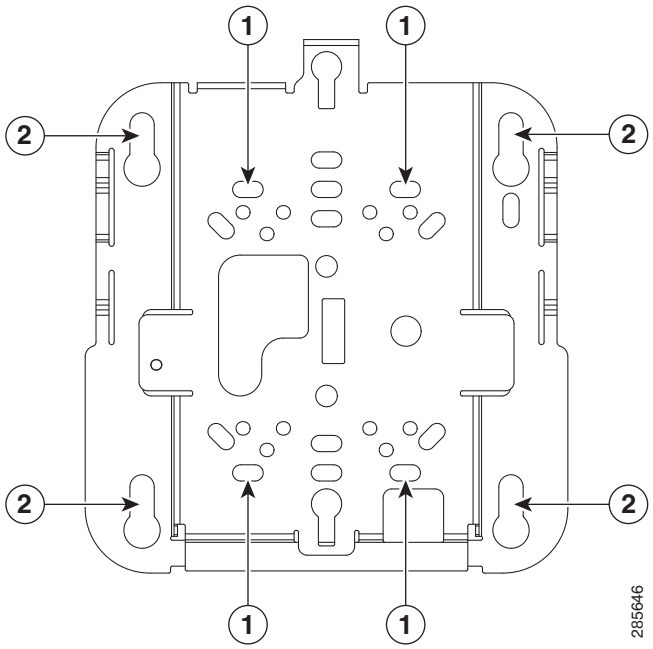

1	Recommended wall mounting screw holes	2	Mounting keyholes

Step 2 Use a #29 drill (0.1360 inch [3.4772 mm]) bit to drill a pilot hole at the mounting hole locations you marked.

Note The pilot hole size varies according to the material and thickness you are fastening. It is recommended to test the material to determine the ideal hole size for your mounting application.

Step 3 (Optional) Drill or cut a cable access hole near and below the location of the mounting bracket cable access cover large enough for the Ethernet cable, building ground wire, and power cables.

Step 4 Pull approximately 9 inches of cable through the hole.

Step 5 Route the Ethernet and power cables through the bracket before you attach the bracket to the ceiling or wall.

Step 6 Route the cables through the main cable access hole and then through the smaller access hole as shown in Figure 2-16.

Figure 2-16 Routing the Ethernet and Power Cables

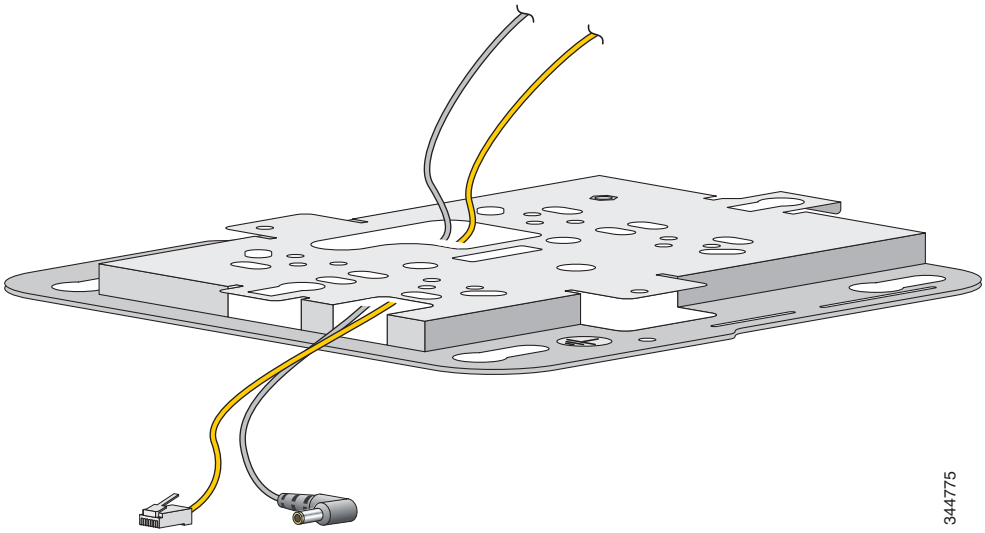

Step 7 (Optional) Use the ground screw to attach the building ground wire to the ground location on the base of the router. See the "Grounding the Cisco 812 ISR" section on page 2-18 for the general grounding instructions.

Step 8 Position the mounting bracket mounting holes (with indents down) over the pilot holes.

Step 9 Insert a fastener into each mounting hole and tighten.

Step 10 Connect the Ethernet and power cables to the router.

Step 11 Align the router feet with the large part of the keyhole mounting slots on the mounting plate.

Step 12 Gently slide the router onto the mounting bracket keyhole slots until it clicks into place.

Mounting the Cisco 812 ISR to a Network or Electrical Box

To mount the Cisco 812 ISR to a network box or an electrical box, perform these steps:

Step 1 Position the universal mounting bracket (C810-BR-CM) over the existing network or electrical box and align the bracket mounting holes with the box holes.

Step 2 Hold the mounting bracket in place and insert a 6-32 x 0.18-inch pan head screw into each of the mounting holes and tighten.

Step 3 Pull approximately 9 inches of Ethernet and power cable through the hole.

Step 4 Route the cables through the bracket before you attach the bracket to the ceiling.

Step 5 Route the cables through the main cable access hole and then through the smaller access hole as shown in Figure 2-16.

Step 6 (Optional) Use the ground screw to attach the building ground wire to the ground location on the base of the router. See the "Grounding the Cisco 812 ISR" section on page 2-18 for the general grounding instructions.

Step 7 Connect the Ethernet and power cables to the router.

Step 8 Align the router feet over the keyhole mounting slots on the optional mounting bracket.

Step 9 Slide the router onto the optional mounting bracket until it clicks into place.

Grounding the Cisco 812 ISR

Grounding is not always required for indoor installations because the Cisco 812 ISR is classified as a low-voltage device and does not contain internal power supplies. However, it is recommended that you check your local and national electrical codes to see if grounding is a requirement. If grounding is required in your area or you wish to ground your router, perform the following steps:

Warning **Use copper conductors only.** Statement 1025

Warning **This equipment must be grounded. Never defeat the ground conductor or operate the equipment in the absence of a suitably installed ground conductor. Contact the appropriate electrical inspection authority or an electrician if you are uncertain that suitable grounding is available.** Statement 1024

Warning **When installing or replacing the unit, the ground connection must always be made first and disconnected last.** Statement 1046

Warning **This equipment needs to be grounded. Use a green and yellow 14 to 18 AWG ground wire to connect the host to earth ground during normal use.** Statement 242

Step 1 Find a suitable building grounding point as close to the router as possible.

Step 2 Connect a user-supplied ground wire to the building grounding point. The wire should be a minimum of #14AWG assuming a circuit length of 25 feet (30.5 cm). Consult your local electrical codes for additional information.

Step 3 Route the ground wire to the router.

Step 4 Attach the wire to a suitable grounding ring lug.

Step 5 Crimp or solder the wire to the lug.

Step 6 Use a Phillips screwdriver to remove the existing 6-32 screw at the grounding location as shown in Figure 2-17.

Figure 2-17 Connecting the Ring Lug onto the Grounding Point

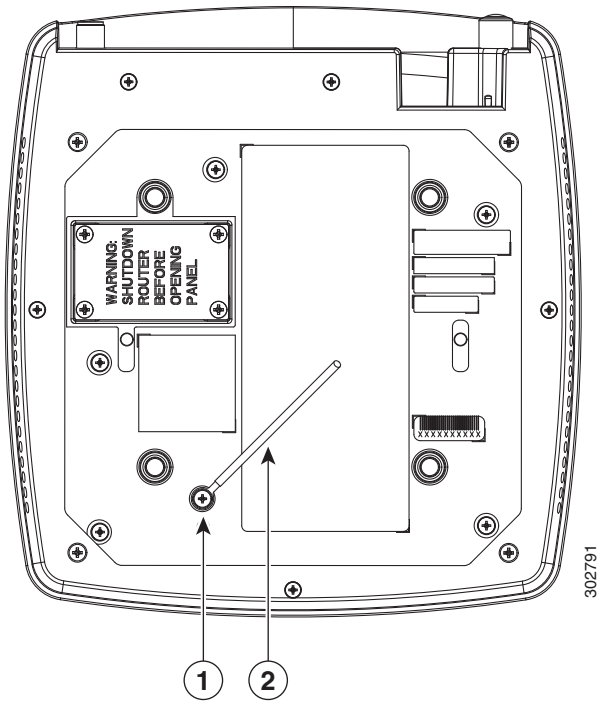

1	6-32 ground screw
2	Ground wire

Step 7 Connect the ring lug to the router grounding point and reinstall the same 6-32 screw.

Installing the Cisco 819 ISR

This section describes the equipment and the procedures for successfully installing the Cisco 819 ISR and contains the following sections:

- Equipment, Tools, and Connections, page 2-20
- Installing the Router, page 2-22
- Mounting the DC Power Supply, page 2-41

Note For compliance and safety information, see the *Regulatory Compliance and Safety Information Roadmap* that ships with the router and the *Regulatory Compliance and Safety Information for Cisco 800 Series Routers*.

Warning **Read the installation instructions before connecting the system to the power source.** Statement 1004

Warning **This equipment must be grounded. Never defeat the ground conductor or operate the equipment in the absence of a suitably installed ground conductor. Contact the appropriate electrical inspection authority or an electrician if you are uncertain that suitable grounding is available.** Statement 1024

Warning **Only trained and qualified personnel should be allowed to install, replace, or service this equipment.** Statement 1030

Warning **No user-serviceable parts inside. Do not open.** Statement 1073

Warning **Ultimate disposal of this product should be handled according to all national laws and regulations.** Statement 1040

Warning **Read the wall-mounting instructions carefully before beginning installation. Failure to use the correct hardware or to follow the correct procedures could result in a hazardous situation to people and damage to the system.** Statement 378

Warning **The covers are an integral part of the safety design of the product. Do not operate the unit without the covers installed.** Statement 1077

Warning **Do not locate the antenna near overhead power lines or other electric light or power circuits, or where it can come into contact with such circuits. When installing the antenna, take extreme care not to come into contact with such circuits, because they may cause serious injury or death. For proper installation and grounding of the antenna, please refer to national and local codes (for example, U.S.:NFPA 70, National Electrical Code, Article 810, Canada: Canadian Electrical Code, Section 54).** Statement 1052

Warning **This product is not intended to be directly connected to the Cable Distribution System. Additional regulatory compliance and legal requirements may apply for direct connection to the Cable Distribution System. This product may connect to the Cable Distribution System ONLY through a device that is approved for direct connection.** Statement 1078

Equipment, Tools, and Connections

This section describes the equipment, tools, and connections necessary for installing your Cisco 819 ISR. It contains the following topics:

- Items Shipped with your Router, page 2-21
- Additional Items, page 2-21
- Connections, page 2-21
- Ethernet Devices, page 2-21

Items Shipped with your Router

Unpack the box and verify that all items listed on the invoice were shipped with the Cisco 819 ISR.

The following items are shipped with your router:

- AC power supply (default)
- AC power supply cable (default)
- Cisco Configuration Professional (Cisco CP) CD
- DC power supply (optional)
- Power cord retention lock (available in Cisco 819HGW, Cisco 819HWD, Cisco 819HG-4G, and Cisco 819G-4G ISRs only)
- Power switch lock (available in Cisco 819HGW, Cisco 819HWD, and Cisco 819HG-4G ISRs only)
- Straight-through RJ-45 Ethernet cable
- Two cellular multiband swivel mount dipole antennas
- Three WiFi antennas for Cisco 819HGW and Cisco 819HWD ISRs

Note AC or DC Power supply is included based on the your order.

Additional Items

The following items are not shipped with the router but are required for installation:

- ESD-preventive cord and wrist strap.
- Screws for mounting the router on a wall.
- Two number-10 wood screws (round- or pan-head) with number-10 washers or two number-10 washer-head screws, for mounting on a wall stud. The screws must be long enough to penetrate at least 3/4 inch (20 mm) into the supporting wood or metal wall stud.
- Two number-10 wall anchors with washers, for mounting the router on a hollow wall.
- Wire crimper for chassis grounding.
- Wire for connecting the chassis to an earth ground.
- AWG 14 (2 mm2) or larger wire for NEC-compliant chassis grounding.
- AWG 18 (1 mm2) or larger wire for EN/IEC 60950–compliant chassis grounding.
- Ring terminal with an inner diameter of 1/4 inch. (5 to 7 mm) for NEC-compliant chassis grounding. Ring terminal used for grounding needs to be listed and suitable for 14 to 18AWG. Lock washer needs to be added to ring terminal ground installation when not using power switch lock.
- Ethernet cables for connecting to the Fast Ethernet (FE) WAN and LAN ports.

Connections

Obtain a broadband or Ethernet connection from your service provider.

Ethernet Devices

Identify the Ethernet devices that you will connect to the router: hub, servers, and workstations or PCs. Ensure that each device has a network interface card (NIC) for connecting to Ethernet ports.

If you plan to configure the software using Cisco IOS commands through the console port, provide an ASCII terminal or a PC that is running terminal emulation software to connect to the console port.

If you plan to connect a modem, provide the modem and modem cable.

Installing the Router

This section describes how to install the Cisco 819 ISR. These routers can be installed on a table top or other flat horizontal surface mounted on a wall or DIN rail.

The recommended clearance when horizontally mounted is 1.5 inches on both sides for floor mount bracket clearance and 2 inches on top. Top clearance is not required but stacking heat-dissipating objects on top of the router is not allowed. I/O side clearance is needed as it is required to access the cable connections. Clearance is not required on the backside (opposite side from I/O face) unless DIN rail mounting is required. Clearance is required to attach and mount the DIN rail bracket. The same clearances apply when mounted vertically.

This section also describes how to attach external antennas to the routers and contains the following topics:

- Warnings, page 2-22
- Accessing the SIM Card, page 2-23
- Installing Antennas, page 2-27
- Installing a WiFi External Antenna, page 2-28
- Installing on a Table, page 2-29
- Mounting on a Wall, page 2-29
- Installing a DIN Rail, page 2-30
- Installing the Router Using the Configurable Low Profile DIN Mount, page 2-34
- Installing the Power Cord Retention Lock, page 2-38
- Installing the Power Switch Lock, page 2-39

Warnings

Warning **This equipment needs to be grounded. Use a green and yellow 14 to 18 AWG ground wire to connect the host to earth ground during normal use.** Statement 242

Warning **This equipment must be grounded. Never defeat the ground conductor or operate the equipment in the absence of a suitably installed ground conductor. Contact the appropriate electrical inspection authority or an electrician if you are uncertain that suitable grounding is available.** Statement 1024

Warning **Read the wall-mounting instructions carefully before beginning installation. Failure to use the correct hardware or to follow the correct procedures could result in a hazardous situation to people and damage to the system.** Statement 378

Warning **Do not cover or obstruct the router vents located on both sides of the router; otherwise, overheating could occur and cause damage to the router.**

Warning **Do not place anything on top of the router that weighs more than 10 pounds (4.5 kilograms), and do not stack routers on a desktop. Excessive weight on top of the router could damage the chassis.**

Warning **Do not install the router or power supplies next to a heat source of any kind, including heating vents.**

Warning **The intra-building port(s) of the equipment or subassembly is suitable for connection to intra-building or unexposed wiring or cabling only. The intra-building port(s) of the equipment or subassembly MUST NOT metallically connect to interfaces that connect to the OSP or its wiring. These interfaces are designed for use as intra-building interfaces only (Type 2 or Type 4 ports as described in GR-1089-CORE, Issue 5) and require isolation from the exposed OSP cabling. The addition of Primary Protectors is not sufficient protection in order to connect these interfaces metallically to OSP wiring.**

Warning **The intra-building port(s) (list the port or ports) of the equipment or subassembly must use shielded intra-building cabling/wiring that is grounded at both ends.**

Accessing the SIM Card

This section describes how to install and replace the SIM card. Ensure that the router is not mounted to a wall, floor, or DIN rail.

Caution Do not touch any part of the exposed PCB circuit area when the SIM cover is removed.

Warning **Hot surface.** Statement 1079

To access the SIM card in the Cisco 819 ISR, follow these steps:

Step 1 Power off the router and disconnect the power cable from the power source.

Step 2 Place the router on its side and ensure that any installed antennas are carefully oriented.

Step 3 Remove the SIM access panel using four flat head #6 screws. (See Figure 2-18.)

Figure 2-18 Accessing the SIM Cards

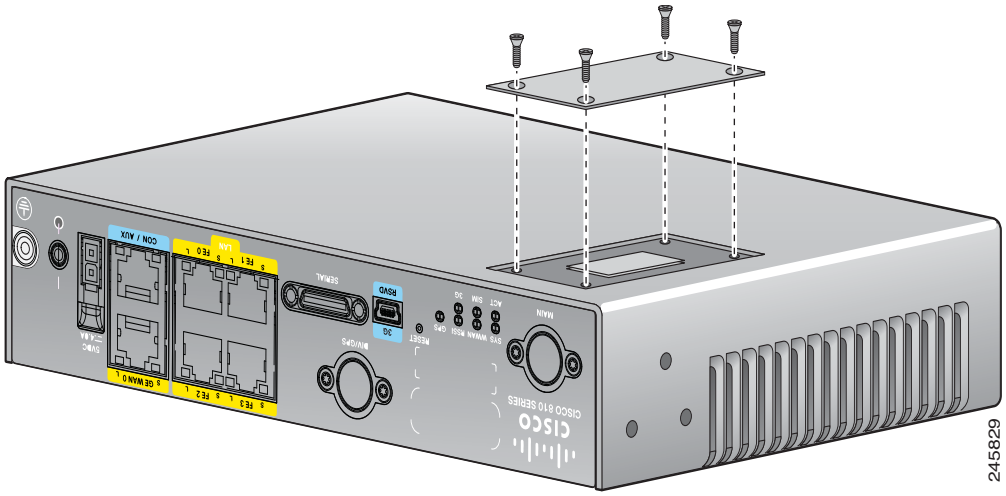

Step 4 To open the SIM socket cover, slide the cover in the direction of the open arrow. (See Figure 2-19.)

Figure 2-19 Opening the SIM Socket Cover

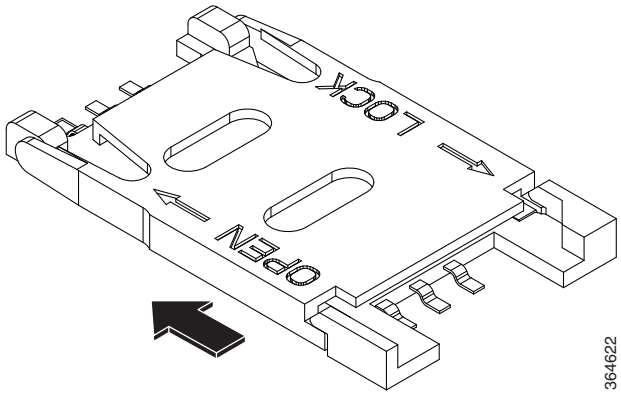

Step 5 Gently lift the cover on its hinges. (See Figure 2-20.)

Figure 2-20 Lifting the Socket Cover

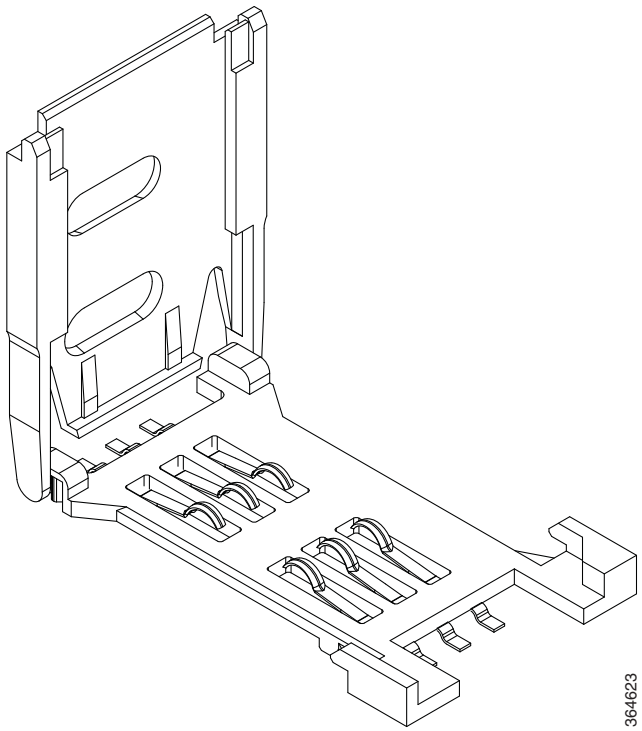

Step 6 Slide the SIM card into the slot in the cover. Gently push down the cover to close. The SIM card will come in contact with the metal contacts in the socket. (See Figure 2-21.)

Figure 2-21 Sliding the SIM Card into the Slot

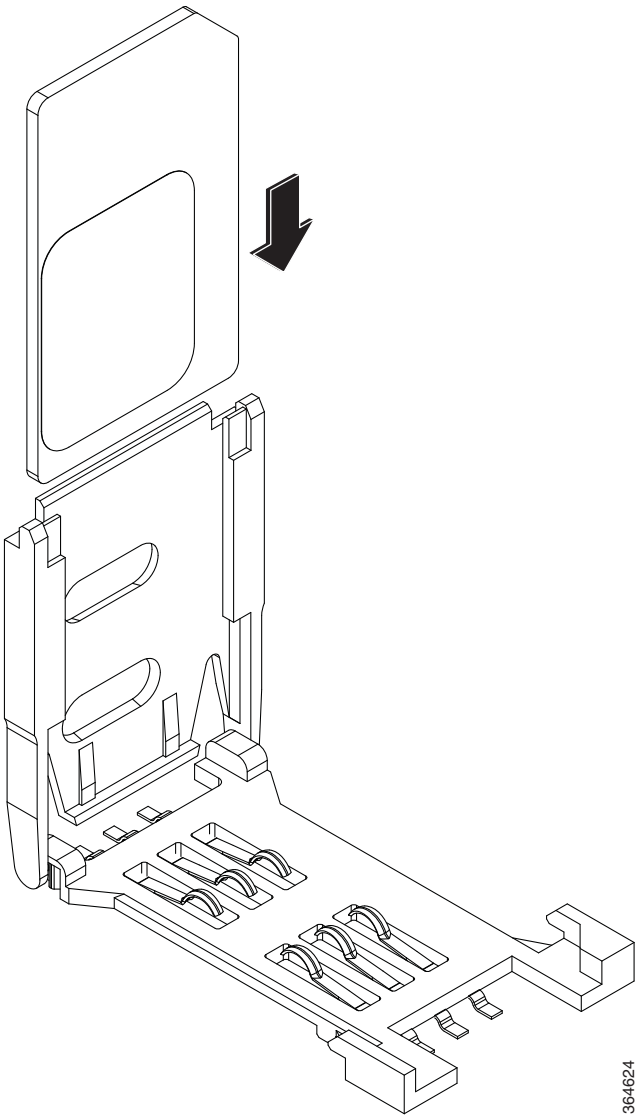

Step 7 To lock the cover, slide it in the direction of the lock arrow. (See Figure 2-22.)

Figure 2-22 Locking the SIM Socket Cover

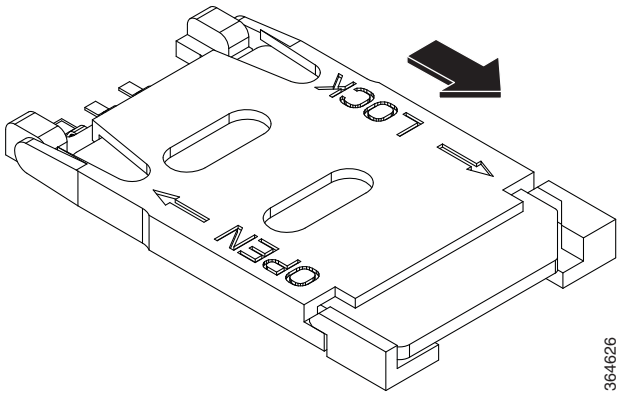

Step 8 Replace the panel and the screws.

Installing Antennas

Note Before you install the Cisco 819 ISR on a table, wall, or DIN rail, install the antennas on the front panel. It is difficult to install the antennas after the router is installed.

To attach the radio antennas to your wireless router, follow these steps:

Step 1 Manually screw the antenna tight to the TNC connectors on the back of the router. (See Figure 2-23.)

Figure 2-23 Installing the Antenna

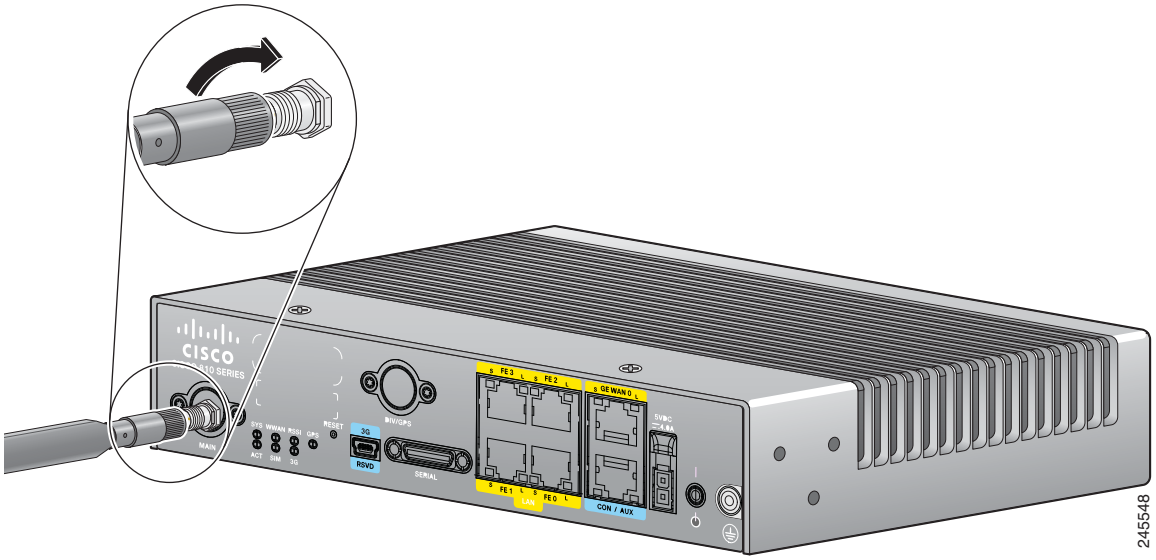

Step 2 Orient the antennas. For optimum wireless performance, antennas should be generally perpendicular to each other.
If the router is being mounted on a desk, orient the antennas straight up.

Installing a WiFi External Antenna

This section describes how to install a WiFi external antenna.

Step 1 Install the lightning arrestor. For details in installing lightning arrestor, see *Cisco Aironet Lightning Arrestor (AIR-ACC245LA-R)*. The lightning arrestor for cellular(3G/4G/LTE) is CGR-LA-NM-NF or CGR-LA-NF-NF. For detailed antenna information, see Table 1-13 and Table 1-15.

Step 2 Rotate the knurled portion of the WiFi external antenna clockwise to screw the antenna to the RP-TNC. (See Figure 2-24.)

Note WiFi antennas should be generally perpendicular to each other to achieve best coverage.

Figure 2-24 Cisco WiFi Antenna Assembly

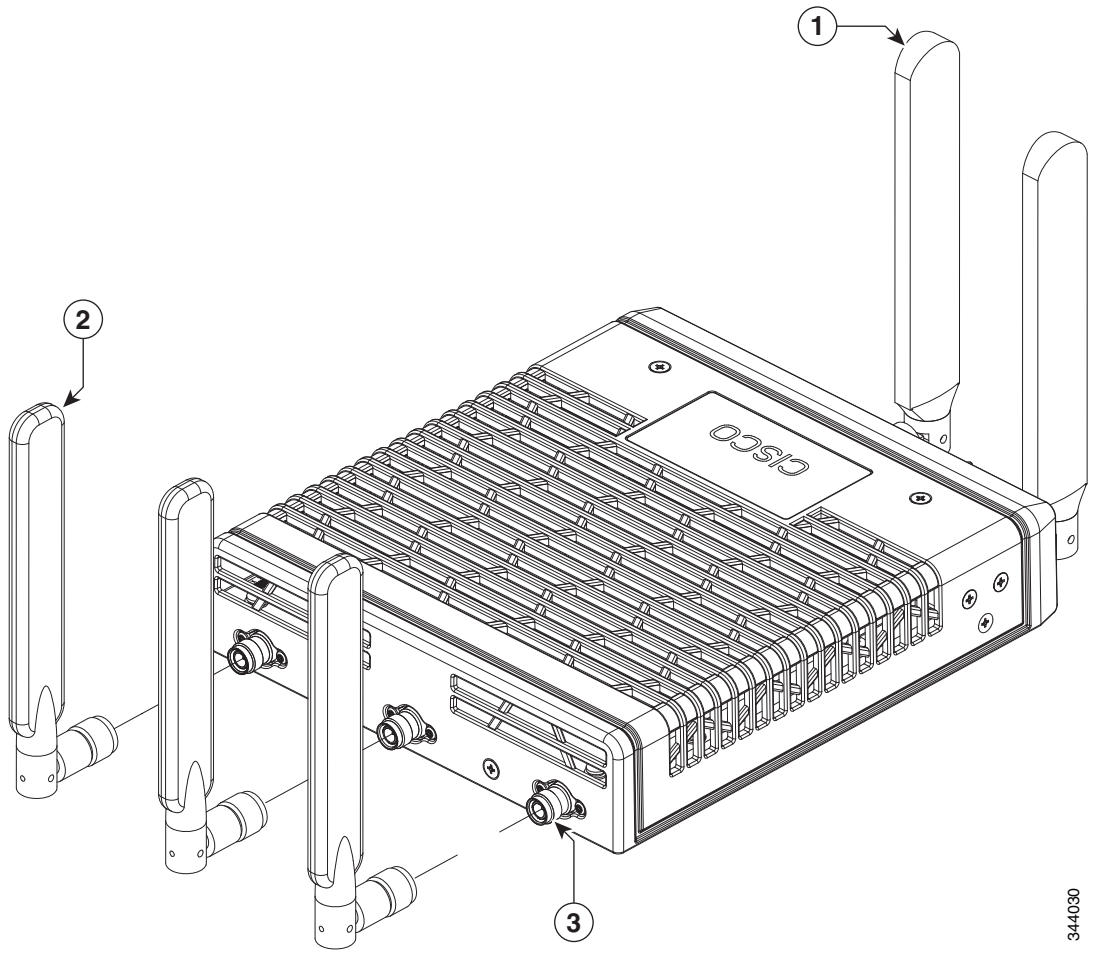

1	3G/4G Dipole External Antenna	**3**	RP-TNC Connector
2	WiFi 2.4/5 Ghz Dipole External Antenna		

Installing on a Table

To install the router on a table or other flat horizontal surface, firmly place the router on a table or other horizontal surface. Keep at least 1 inch (2.5 centimeters) of clear space for heat dissipation.

Connect the chassis to a reliable earth ground. For the chassis ground connection procedures, see the "Installing the Router Using the Configurable Low Profile DIN Mount" section on page 2-34.

Mounting on a Wall

The Cisco 819 ISR has mounting holes on the bottom of the chassis for mounting the unit on a wall or other vertical surface.

Tip When choosing a location for wall-mounting the router, consider cable limitations and wall structure.

To mount the router on a wall, follow these steps:

Step 1 Remove the screws on the sides of the routers.

Step 2 Attach the standard brackets to the chassis using the three screws provided for each bracket. (See Figure 2-25.)

Figure 2-25 Attaching the Standard Brackets

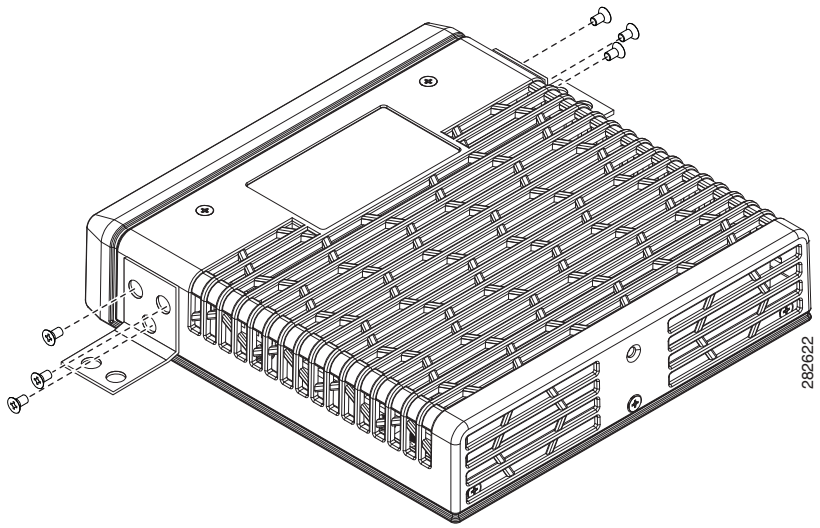

Step 3 Install the router to a wall stud using two number-10 wood screws, round- or pan-head, with number-10 washers or two number-10 washer-head screws. The screws must be long enough to penetrate at least 1.0 inch (25.4 mm) into the supporting wood or metal wall stud. (See Figure 2-26.) Tighten the screws to a torque of 6 to 8 inch-pound.

Note The orientation of the Cisco 819 ISR products is critical when wall-mounting. The router must be oriented as shown in Figure 2-26 with the left side of the router rotated up (as viewed from the IO side) to comply with IP41 and safety criteria. No other wall mounting orientation is supported.

Note The mounting brackets (PID number ACS-810-FWM) are not included in the package of C819G series routers.

Figure 2-26 Installing the Router to the Wall

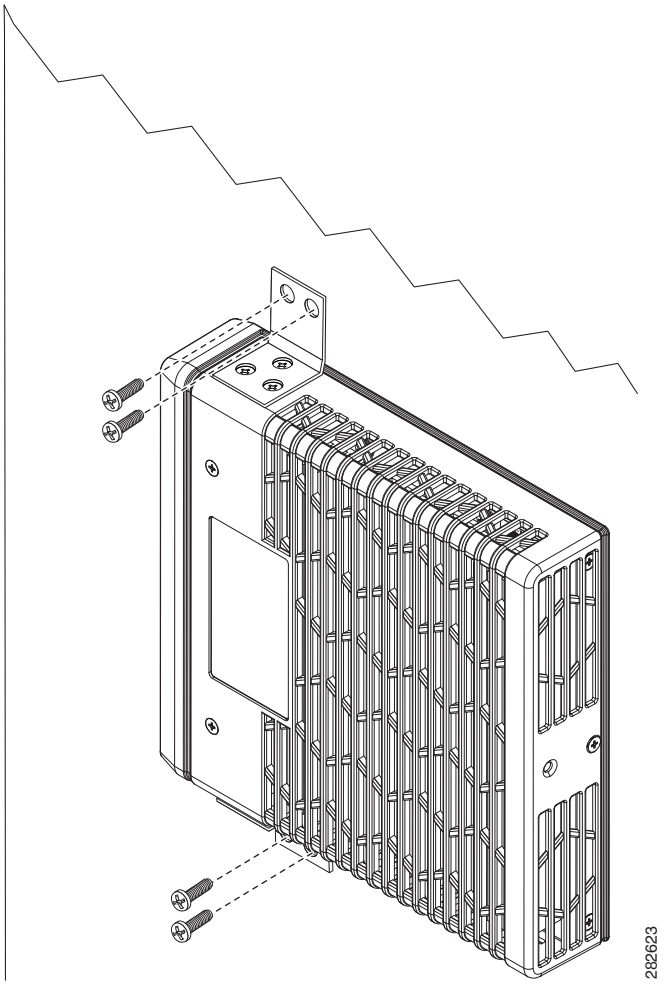

Note For hollow-wall mounting, each bracket requires two wall anchors with washers. Wall anchors and washers must be size number 10.

Step 4 Route the cables so that they do not put a strain on the connectors or mounting hardware. To comply with IP 41, cables should be routed down relative to the router to prevent water from travelling on the cables.

Installing a DIN Rail

You can use either the 7.5-mm or the 15-mm thick DIN rail for the Cisco 819 ISR. Secure the DIN rail to the mounting surface approximately every 7.8 inches (200 mm) and use end-anchors appropriately.

Note DIN rail mounting is not supported on Cisco 819GW, Cisco 819HGW, and Cisco 819HWD ISRs.

To attach the Cisco 819 ISR to a 35-mm wide DIN rail, follow these steps.

Step 1 Attach the DIN rail to the back of the router using the three screws provided. (See Figure 2-27.)

Figure 2-27 Attaching the DIN Rail to the Cisco 819 ISR

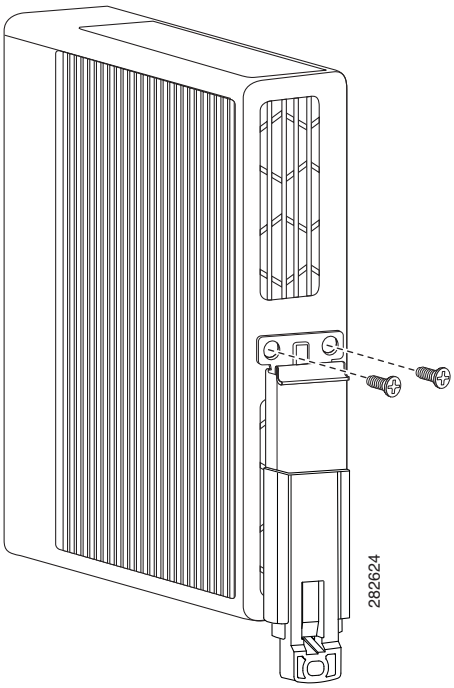

Step 2 Find the tab on the end of the DIN rail that extends past the router. (See Figure 2-28.) Press the tab in and slide the DIN rail out while the tab is pressed down.

Figure 2-28 DIN Rail Tab

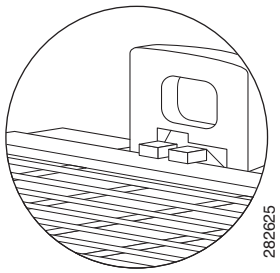

Step 3 Turn the router sideways so that the antenna is at the top.

Step 4 Position the rear edge of the router directly in front of the DIN rail, making sure that the DIN rail fits in the space between the latch and hook.

Step 5 Position the router so that the hook on the DIN rail bracket hooks onto the top edge of the DIN rail. The weight of the product can rest on the hook temporarily while the DIN rail bracket latches are secured.

Step 6 Push the DIN rail bracket latch up after the router is over the DIN rail to secure it. The router is now installed in the DIN rail. (See Figure 2-29.)

Figure 2-29 Cisco 819 ISR Installed with the DIN Rail

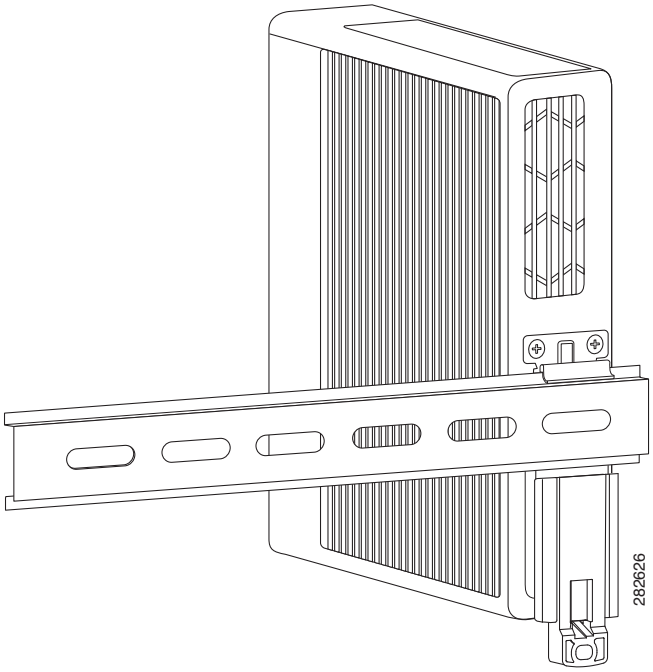

Installing the Router Using the Configurable Low Profile DIN Mount

If space is limited between the DIN rail and the enclosure cover, the Configurable Low Profile DIN Mount can be utilized to mount the router flat against the DIN rail. It can also be configured in three different ways to allow router cabling to exit from the bottom, right or left.

Figure 2-30 Configurable Low Profile DIN Mount standard configuration

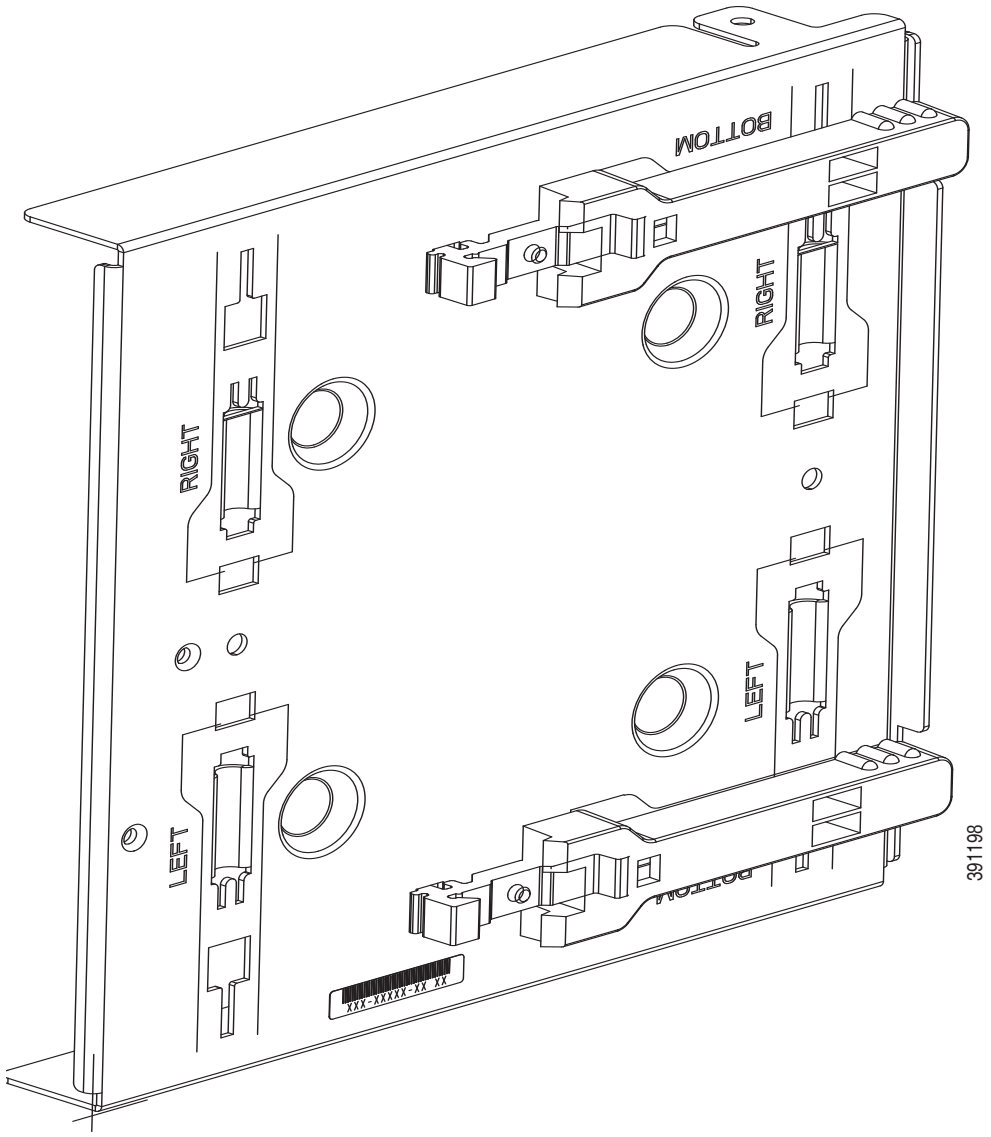

Configuring the Mount

Figure 2-31 Low Profile DIN Mount Configuration

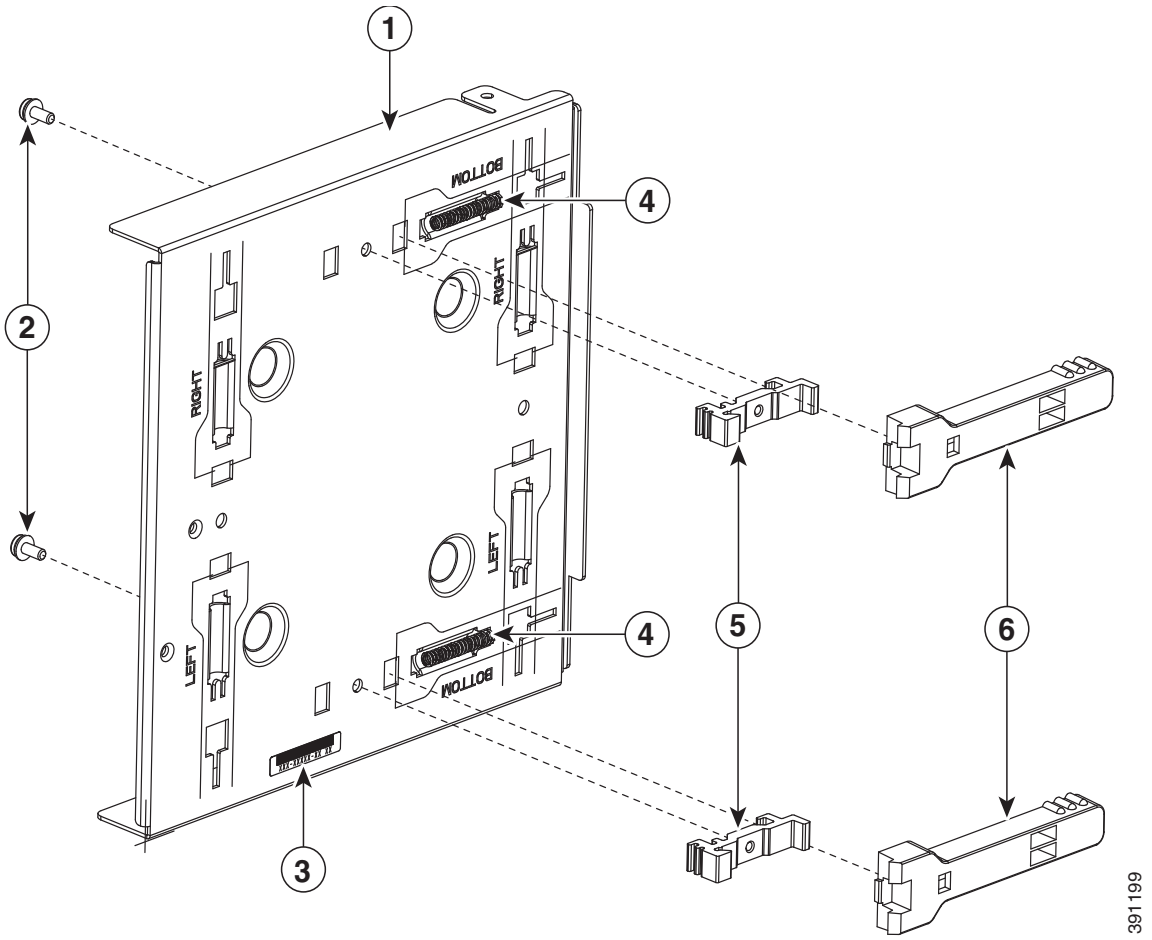

1	Mount tray	**4**	DIN Rail Latch Springs
2	DIN Rail Latch Bracket Screws	**5**	DIN Rail Brackets
3	Mount Serial Number	**6**	DIN Rail Latch

The mount comes configured in a bottom cable exit position, with the rail latches in the slots marked **Bottom**. To reconfigure the mount:

1. Remove the two DIN Rail Latch Bracket Screws (Item 2).
2. Slide the DIN Rail Latch Brackets (Item 5) and DIN Rail Latch (Item 6) against the spring pressure, towards the edge of the tray and remove the bracket and latch assembly. Be careful not to lose the springs.
3. Remove the DIN Rail Latch Springs (Item 4)
4. Identify the desired mounting configuration and replace the latch assemblies in slots with the matching labels, using the reverse order of steps 1 through 3.

Attaching the mount to the router

Figure 2-32 Cisco ISR 819 mounted in a Configurable Low Profile DIN mount

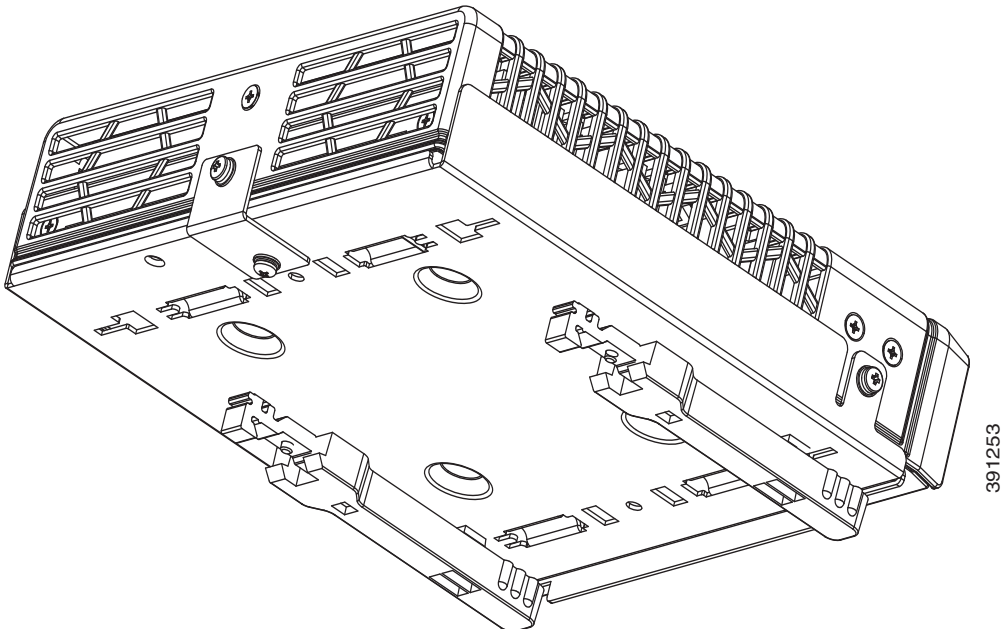

To attach the router to the mount:

1. Remove the bottom screw of the 3 screws on the sides of the router at the front.
2. Slip the router into the mount tray
3. Align the holes at the front sides of the mount with the vacant screw holes on the router and screw the mount to the router with the longer, 6-32 x .375 Philips/Pan Head screws with locking washer (Cisco 48-0422-01), which are included with the kit.
4. Remove the screw near the middle on the back of the router
5. Locate the “L” bracket that came with the mount, and screw the bracket to the router with the other 6-32 x .375 Philips/Pan Head screw and locking washer (Cisco 48-0422-01).
6. Now screw the bracket to the mount with the shorter, supplied, 6-32 x .25 Philips/Pan Head screw and locking washer (Cisco 48-0421-01).

Attaching the Assembled Router and Configurable DIN Mount to the DIN Rail

Once the mount has been configured according to need, and the router has been attached to the mount, the assembly is ready to be snapped onto the DIN rail.

Installing the Router Ground Connection

The router must be connected to a reliable earth ground. Install the ground wire in accordance with local electrical safety standards.

- For NEC-compliant grounding, use size 14 AWG (2 mm2) or larger copper wire and a ring terminal with an inner diameter of 1/4 in. (5 to 7 mm).
- For EN/IEC 60950-compliant grounding, use size 18 AWG (1 mm2) or larger copper wire.

Warning **This equipment needs to be grounded. Use a green and yellow 14 to 18 AWG ground wire to connect the host to earth ground during normal use.** Statement 242

To install the ground connection, follow these steps:

Step 1 Strip one end of the ground wire to the length required for the terminal.

Step 2 Crimp the ground wire to the ring terminal using the wire crimper.

Step 3 If you choose to install the power switch lock, perform Step 5 to Step 7. Otherwise, perform Step 4, Step 6 and Step 7.

Step 4 Attach the ring terminal to the chassis. Use the single screw provided. Tighten the screws to a torque of 8 to 10 inch-pound (0.9 to 1.1 newton meter). (See Figure 2-33.)

Figure 2-33 Chassis Ground Connection Using Ring Terminal

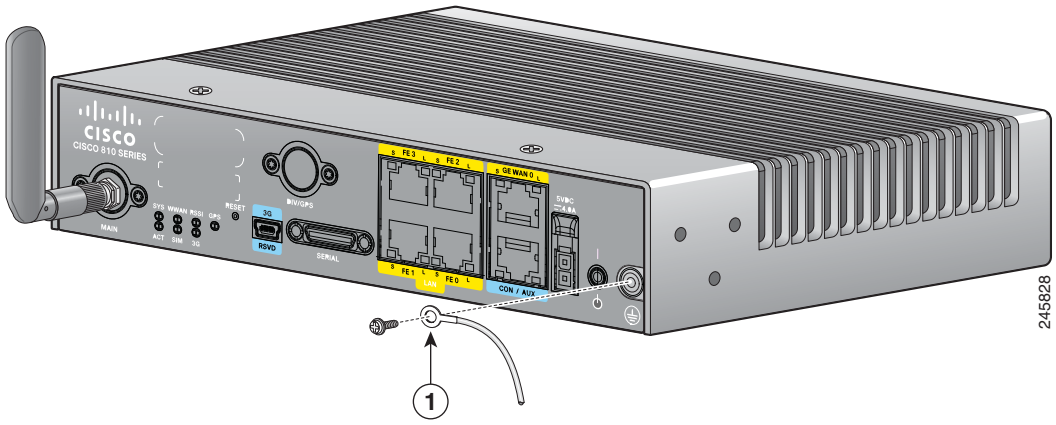

1	Ring terminal		

Step 5 Install the power switch lock, see the "Installing the Power Switch Lock" section on page 2-39. Tighten the screws to a torque of 8 to 10 in-lb (0.9 to 1.1 N-m). Torque the hex standoff to the same torque.

Step 6 Connect the other end of the ground wire to a known reliable earth ground point at your site.

Step 7 If you are using this router in a vehicle, attach the ring terminal to the chassis using one of the screws provided and the green or green and yellow striped wire. Connect the other end of the wire to the vehicle ground.

After you install and properly ground the router, you can connect the power wiring, the LAN cables, and the cables for administrative access as required for your installation.

Installing the Power Cord Retention Lock

The Cisco 819 ISRs have a power cord retention mechanism as an accessory. It locks the power cord to the router so when a user accidentally pulls out the power cord, the power cord will not come out from the router. For the complete list of Cisco 819 ISRs that support power cord retention lock, see Table 1-7.

This section describes how to install the power cord retention lock.

Step 1 Pre-assemble the o-ring onto the barrel of the power cord as shown in Figure 2-34.

Figure 2-34 Pre-assemble the O-Ring onto the Barrel

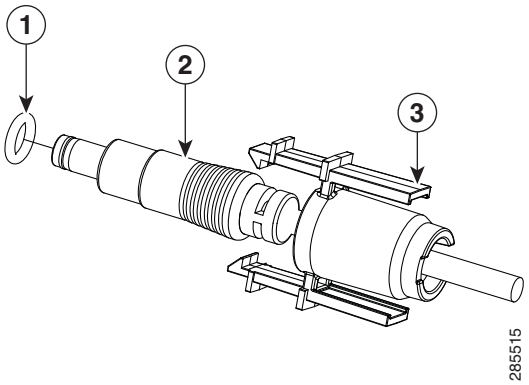

1	O-ring	**3**	Power cord lock
2	Power cord connector		

Step 2 Place the power cord lock onto the power cord behind the connector overmold as shown in Figure 2-35. Slide the power cord lock forward so that it captures the overmold and is fully seated.

Figure 2-35 Place the Power Cord Lock onto the Power Cord

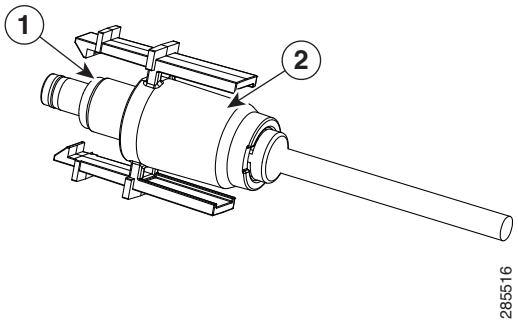

1	O-ring	**2**	Power cord lock

Step 3 Install the power cord with power cord lock and the pre-installed o-ring to mate with the power jack on the router while making sure that the two arms of the power cord lock slide into the corresponding slots on the router and are fully seated with both arms locking into the slots as shown in Figure 2-36.

Figure 2-36 Installing Power Cord Lock onto the Router

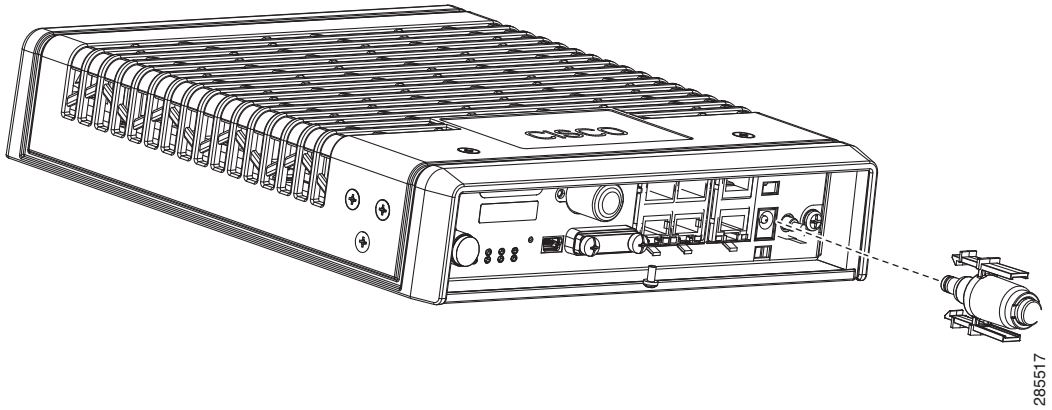

Step 4 To remove the power cord lock, use your thumb and index fingers to squeeze ends of tabs while pulling away from the router. (See Figure 2-37.)

Figure 2-37 End of Tabs

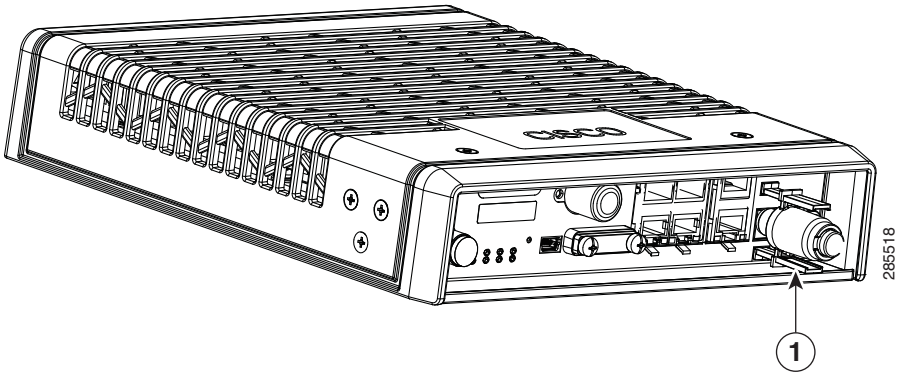

1	End of tabs

Installing the Power Switch Lock

The Cisco 819 ISRs have a power switch lock as an accessory. The power switch lock prevents unauthorized access to a tampered proof router (for example, router in a bus). For the complete list of Cisco 819 ISRs that support power switch lock, see Table 1-7.

This section describes how to install the power switch lock.

Step 1 Install the power switch lock by following the parts listed in Figure 2-38.
All these parts are in the accessory kit in their own bag. The ring terminal does not have to be installed. Figure 2-39 shows the power switch lock installed.

Figure 2-38 Installing Power Switch Lock

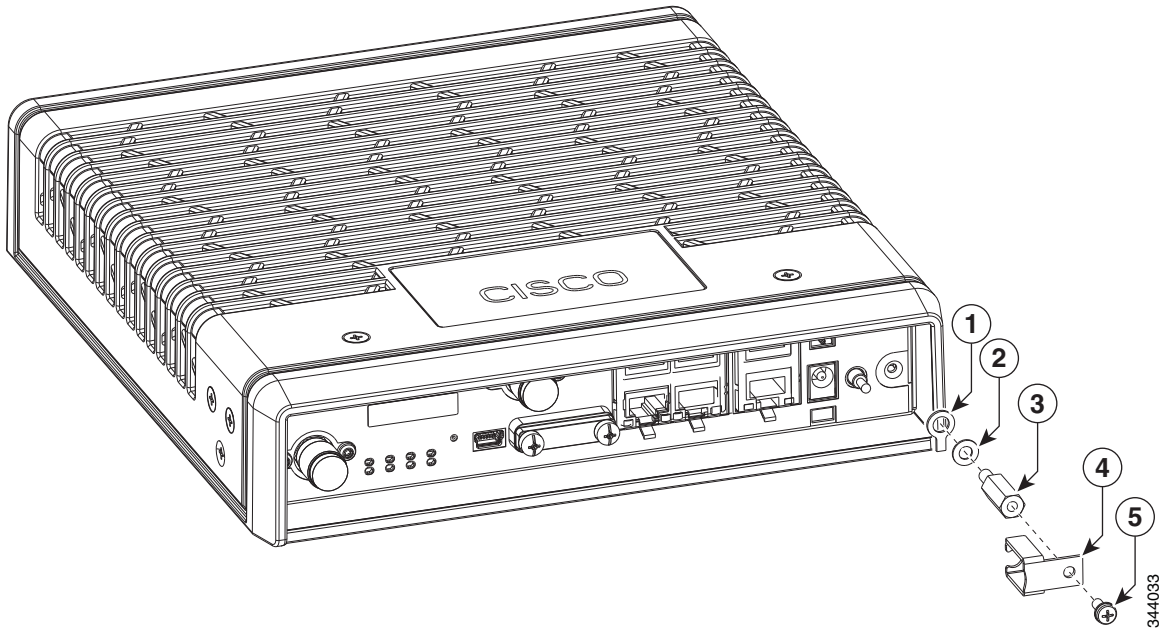

1	Ring terminal	**4**	Power switch lock
2	Power switch lock washer	**5**	Pan-head screw
3	Power switch lock standoff		

Figure 2-39 Power Switch Lock Installed

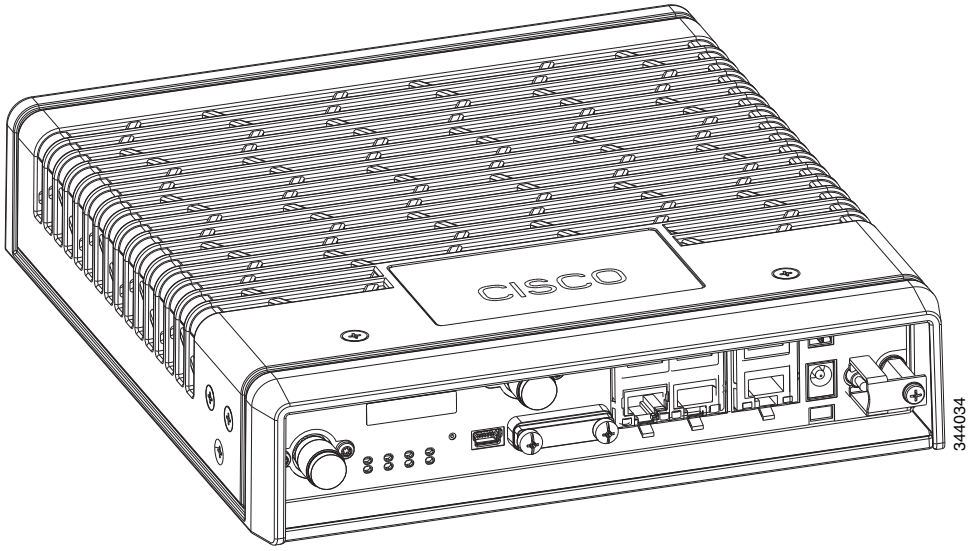

Mounting the DC Power Supply

Note This equipment is suitable for installation in Network Telecommunications Facilities and locations where the NEC applies. This equipment is suitable for installations as part of the Common Bonding Network (CBN).

Note The Battery Return (BR) input terminal shall be an isolated DC return (DC-I). The DC return terminal or conductor shall not be connected to the equipment frame or the grounding means of the equipment. DC-powered products have a nominal operating DC voltage of 24 and 48 VDC. Reference American National Standard for Telecommunications (ATIS) 0600315.

Warning **Read the wall-mounting instructions carefully before beginning installation. Failure to use the correct hardware or to follow the correct procedures could result in a hazardous situation to people and damage to the system.** Statement 378

The Cisco 800 ISR DC power supply may be mounted to a wall using four #6 pan- or round-head wood screws for the mounting holes on the supply.

Caution Each mounting screw must go into a wall stud (wood) or a wall anchor of the appropriate type for the wall. Screws into drywall is not sufficient to support the DC power supply.

- For attaching to a wall stud, the power supply requires #6 wood screws (round- or pan-head). The screws must be long enough to penetrate and tap at least 0.75 inches (19.1 mm) into the supporting wood or metal wall stud.
- For hollow-wall mounting, the power supply requires the use of appropriate-sized wall anchors that work with the drywall thickness the unit is to be installed in. Use hollow-wall anchors that support using #6 screws and use #6 pan- or round-head screws to secure the power supply to the wall. Each wall anchor should be rated for at least 30 lbs.

Caution If the screws are not properly anchored, the strain of the DC supply cables could pull the router from the wall.

Figure 2-40 DC Power Supply Wall-Mounting

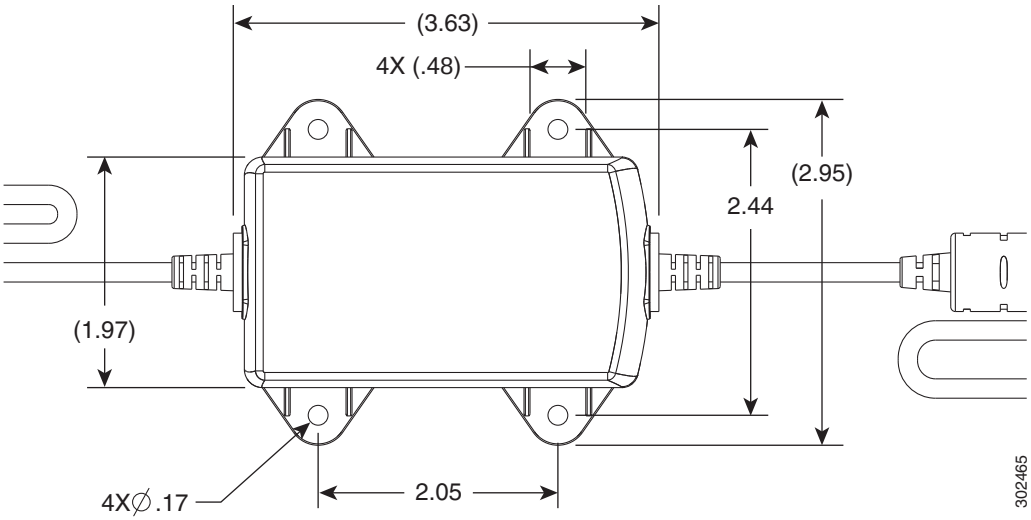

To mount the DC power supply (PID: PWR2-20W-12VDC and Part Number: 341-0548-02) to the wall, follow these instructions:

Step 1 Install the four screws into the mounting holes on the DC power supply (see Figure 2-40) before being secured to the wall studs or wall anchors.

Step 2 Hang the DC power supply by securing the screws to the wall stud or into the wall anchors.

Note The DC supply is IP 41 compliant in all six orthogonal directions. The mounting orientation will not affect IP 41 compliance.

Figure 2-41 DC Power Supply Wall-Mounting

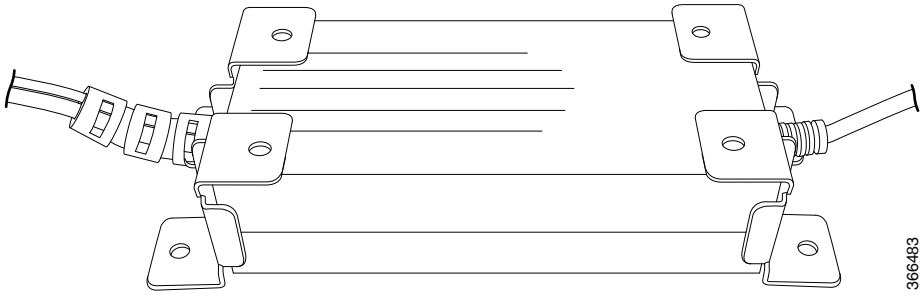

To mount the DC power supply (PID: PWR2-22W-20-60 and Part Number: 341-100360-01) to the wall, follow these instructions:

Step 1 Attach the four corner brackets to the DC power module using the screws provided for each bracket (see Figure 2-41).

Step 2 Install the power module to a wall stud using the remaining screws provided for the brackets.

Installing the Cisco 860, 880, 890 ISR

This section describes the equipment and the procedures for successfully installing the Cisco 860 series, 880 series, and 890 series ISRs, and contains the following sections:

- Equipment, Tools, and Connections, page 2-44
- Installing the Cisco 860, 880, and 890 Series Routers, page 2-45
- Installing the C881G-B/S/V-K9 ISR, page 2-60
- Installing the C881GW-S/V-A-K9 ISR, page 2-60
- Installing the C881G-U-K9 ISR, page 2-60
- Installing the Cisco 880G for 3.7G (HSPA+)/3.5G (HSPA) ISRs, page 2-62

Note For compliance and safety information, see the *Regulatory Compliance and Safety Information Roadmap* that ships with the router and the *Regulatory Compliance and Safety Information for Cisco 800 Series Routers.*

Warning **All wireless LAN products in the 5.2/5.3GHz band cannot be used outdoors. Use the product only indoors.** Statement 372

Warning **Read the installation instructions before connecting the system to the power source.** Statement 1004

Warning **Only trained and qualified personnel should be allowed to install, replace, or service this equipment.** Statement 1030

Warning **Ultimate disposal of this product should be handled according to all national laws and regulations.** Statement 1040

Warning **Do not locate the antenna near overhead power lines or other electric light or power circuits, or where it can come into contact with such circuits. When installing the antenna, take extreme care not to come into contact with such circuits, because they may cause serious injury or death. For proper installation and grounding of the antenna, please refer to national and local codes (for example, U.S.:NFPA 70, National Electrical Code, Article 810, Canada: Canadian Electrical Code, Section 54).** Statement 1052

Warning **No user-serviceable parts inside. Do not open.** Statement 1073

Equipment, Tools, and Connections

This section describes the equipment, tools, and connections necessary for installing your Cisco 860 series, 880 series, and 890 series ISRs. It contains the following topics:

- Items Shipped with your Router, page 2-44
- Additional Items, page 2-44
- Connections, page 2-45
- Ethernet Devices, page 2-45

Items Shipped with your Router

Unpack the box and verify that all items listed on the invoice were shipped with the router.

Table 2-1 lists the items and their quantities that are shipped with each router model.

Table 2-1 Items and Their Quantities That Are Shipped with the Cisco 860 Series, Cisco 880 Series, and Cisco 890 Series ISRs

Item	Cisco 860 Series Routers	Cisco 860VAE Series Routers[1]	Cisco 880 Series Routers	Cisco 890 Series Routers
Straight-through RJ-45 Ethernet cable (Default and GREEN-OPTION)	—	—	—	—
ADSL RJ-11-to-RJ-11 straight-through cable	—	—	—	1
RJ-11 DSL[2] cable	1[3]	n/a	1[4]	1
DSL RJ-45-to-dual-RJ-11 breakout cable	—	n/a	1[5]	1
RJ-45-to-DB-9 console cable ((Default and GREEN-OPTION)	—	—	—	—
External 12 VDC power supply adapter	1	1	1	1
AC power supply cable with cable retention clip	1	1	1	1
Cisco Configuration Professional (Cisco CP) CD[6]	1	1	1	1

1. By default, no cables are shipped with Cisco 860VAE models unless requested through the dynamic configuration tool.
2. DSL = digital subscriber line.
3. Shipped with Cisco 867 models only.
4. Shipped with Cisco 886, 887, 887M, and 886-J models only.
5. Shipped with Cisco 888E models only.
6. Cisco CP is optional by order and available only on some SKUs.

Additional Items

The following items are not shipped with the router but are required for installation:

- ESD-preventive cord and wrist strap.
- Screws for mounting the router on a wall:

  - Two number-10 wood screws (round- or pan-head) with number-10 washers, or two number-10 washer-head screws, for mounting on a wall stud. The screws must be long enough to penetrate at least 3/4 in. (20 mm) into the supporting wood or metal wall stud.
  - Two number-10 wall anchors with washers, for mounting the router on a hollow-wall.
- Wire crimper for chassis grounding.
- Wire for connecting the chassis to an earth ground:
  - AWG 14 (2 mm^2) or larger wire for NEC-compliant chassis grounding.
  - AWG 18 (1 mm^2) or larger wire for EN/IEC 60950–compliant chassis grounding.
- Ring terminal with an inner diameter of 1/4 in. (5 to 7 mm), for NEC-compliant chassis grounding. Ring terminal used for grounding needs to be listed and suitable for 14 to 18AWG. Lock washer needs to be added to ring terminal ground installation when not using power switch lock.
- Ethernet cables for connecting to the Fast Ethernet (FE) WAN and LAN ports.

Connections

Obtain a broadband or Ethernet connection from your service provider.

Ethernet Devices

Identify the Ethernet devices that you will connect to the router: hub, servers, and workstations or PCs. Ensure that each device has a network interface card (NIC) for connecting to Ethernet ports.

- If you plan to configure the software using Cisco IOS commands through the console port, provide an ASCII terminal or a PC that is running terminal emulation software to connect to the console port.
- If you plan to connect a modem, provide the modem and modem cable.
- If you plan to use the Data BRI port, provide an NT1 device and an ISDN S/T cable.
- If you plan to use the cable-lock feature, provide a Kensington or equivalent locking cable.

Installing the Cisco 860, 880, and 890 Series Routers

This section describes how to install the Cisco 860 series, 880 series, and 890 series ISRs. These routers can either be installed on a table top, or other flat horizontal surface or be mounted on a wall. The Cisco 890 series ISRs may be mounted in a rack. Certain Cisco 880 series ISRs can use the same ACS-890-RM-19 rack mount kit. For compatibility, see the Cisco 800 Series Comparison Chart.

This section also describes how to attach WLAN antennas to the Cisco 890 series routers. This section contains the following topics:

- Warnings, page 2-46
- Installing on a Table, page 2-46
- Mounting on a Wall, page 2-47
- Installing the Router Ground Connection, page 2-49
- Installing the FIPS Cover, page 2-50
- Installing Antennas for Cisco 890 Series, page 2-54
- Installing Cisco 890 Series in a Rack, page 2-58

Warnings

Warning **This equipment needs to be grounded. Use a green and yellow 14 to 18 AWG ground wire to connect the host to earth ground during normal use.** Statement 242

Warning **This equipment must be grounded. Never defeat the ground conductor or operate the equipment in the absence of a suitably installed ground conductor. Contact the appropriate electrical inspection authority or an electrician if you are uncertain that suitable grounding is available.** Statement 1024

Warning **Read the wall-mounting instructions carefully before beginning installation. Failure to use the correct hardware or to follow the correct procedures could result in a hazardous situation to people and damage to the system.** Statement 378

Note

- Do not stack anything on top of the router.
- Do not cover or obstruct the router vents located on both sides and top of the routers; otherwise, overheating could occur and cause damage to the router.
- Place router in ventilated area to avoid local air heating.

Caution Do not cover or obstruct the router vents located on both sides of the router; otherwise, overheating could occur and cause damage to the router.

Caution Do not place anything on top of the router that weighs more than 10 pounds (4.5 kilograms), and do not stack routers on a desktop. Excessive weight on top of the router could damage the chassis.

Caution Do not install the router or power supplies next to a heat source of any kind, including heating vents.

Caution The top surface of the router is hot since heat is dissipated through the top. Do not keep any object in direct contact with the surface for a prolonged period.

Installing on a Table

To install the router on a table or other flat horizontal surface, firmly place the router on a table or other horizontal surface. Keep at least 1 inch (2.5 cm) of clear space beside the cooling inlet and exhaust vents.

Connect the chassis to a reliable earth ground. For the chassis ground connection procedures, see the "Installing Cisco 890 Series in a Rack" section on page 2-58.

Note Do not place anything on top of the router.

Mounting on a Wall

The Cisco 860 series, 880 series, and 890 series ISRs have mounting holes on the bottom of the chassis for mounting the unit on a wall or other vertical surface.

The mounting holes are bidirectional. You can hang the router with the front bezel facing upward or downward.

Keep at least 1 inch (2.5 cm) of clear space beside the cooling inlet and exhaust vents.

Tip When choosing a location for wall-mounting the router, consider cable limitations and wall structure.

To mount the router on a wall, follow these steps:

Step 1 Determine the required distance between mounting holes on the router. Figure 2-42 shows the wall-mount holes located on the underside of the router.

Note For most router models, the distance between mounting holes is 8.2 inches (208 mm), as shown in Figure 2-42. For the Cisco 866 and Cisco 867 models, the distance is 7.85 inches (199 mm). Verify the required distance before drilling the holes.

Figure 2-42 Wall-mount Holes on the Underside of the Router

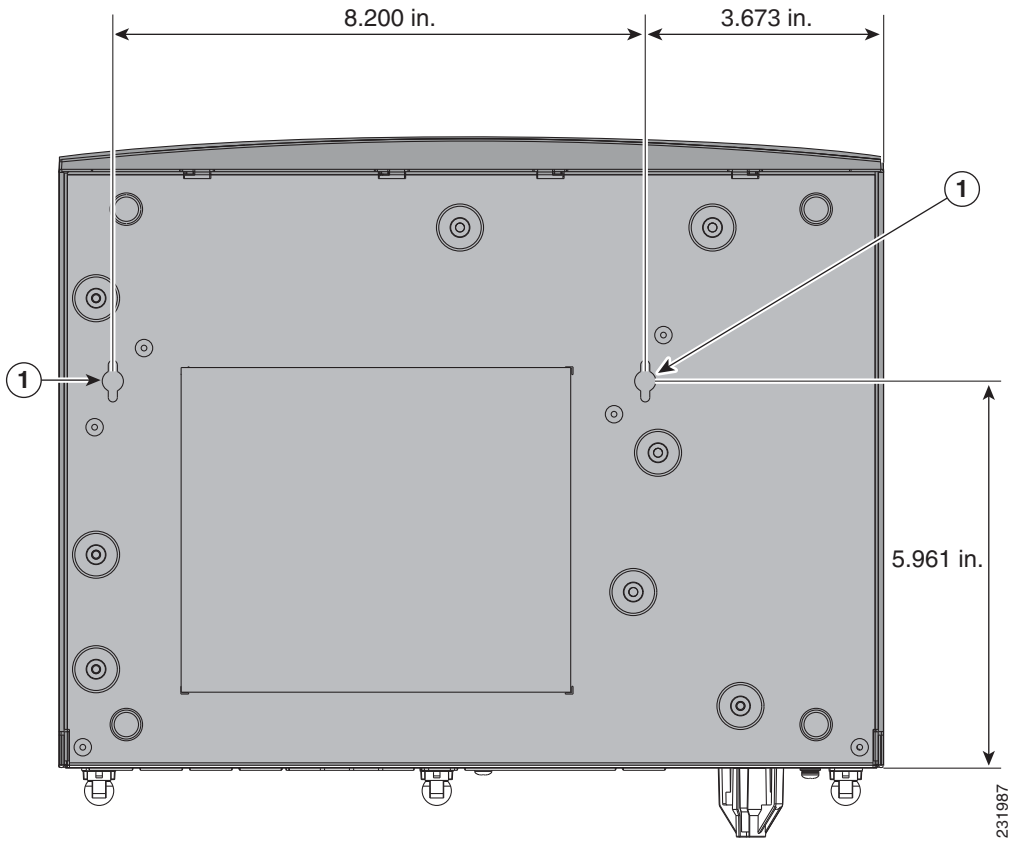

1	Wall-mount holes		

Step 2 Insert the screws, with anchors, into the wall. Leave 1/8 inch (0.32 cm) between the screw head and the wall. See Figure 2-43.

Step 3 Hang the router on the screw without forcibly pushing towards the wall side. The screw head may damage the protection wall inside. Place the power adapter on a nearby horizontal surface. See Figure 2-43.

Figure 2-43 Router Mounted on the Wall

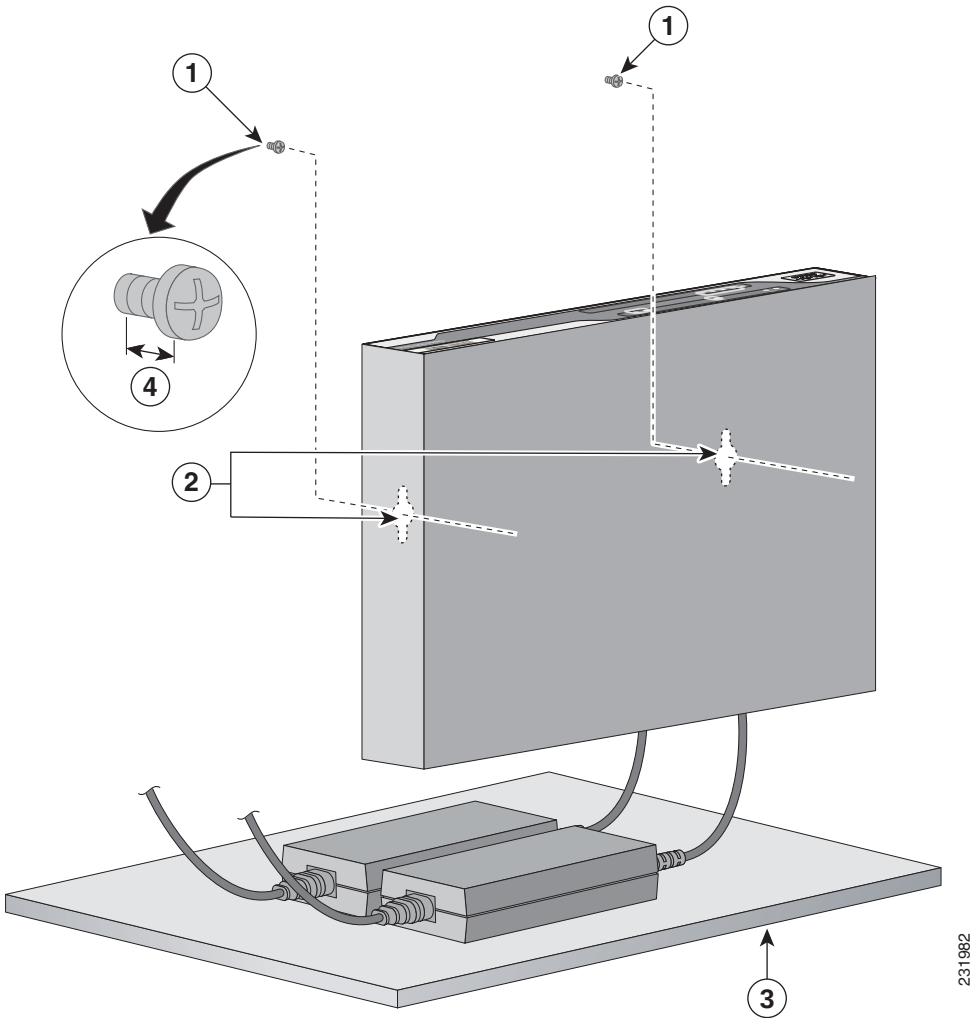

1	Two number-10 wood screws mounted on the wall	**3**	Horizontal surface on which to place the power adapter
2	Wall-mount holes	**4**	Distance between the screw head and the wall, 1/8 in. (0.32 cm)

Step 4 Connect the chassis to a reliable earth ground. For the chassis ground connection procedures, see the "Installing Cisco 890 Series in a Rack" section on page 2-58.

Installing the Router Ground Connection

The router must be connected to a reliable earth ground. Install the ground wire in accordance with local electrical safety standards.

- For NEC-compliant grounding, use size 14 AWG (2 mm^2) or larger copper wire and a ring terminal with an inner diameter of 1/4 in. (5 to 7 mm).
- For EN/IEC 60950–compliant grounding, use size 18 AWG (1 mm^2) or larger copper wire.

To install the ground connection, follow these steps:

Step 1 Strip one end of the ground wire to the length required for the ground lug or terminal.

Step 2 Crimp the ground wire to the ground lug or ring terminal, using the wire crimper.

Step 3 Attach the ground lug or ring terminal to the chassis, as shown in Figure 2-44. For a ground lug, use the two provided screws with captive locking washers. For a ring terminal, use one of the screws provided. Tighten the screws to a torque of 8 to 10 in-lb (0.9 to 1.1 N-m).

Figure 2-44 Chassis Ground Connection Using Ring Terminal

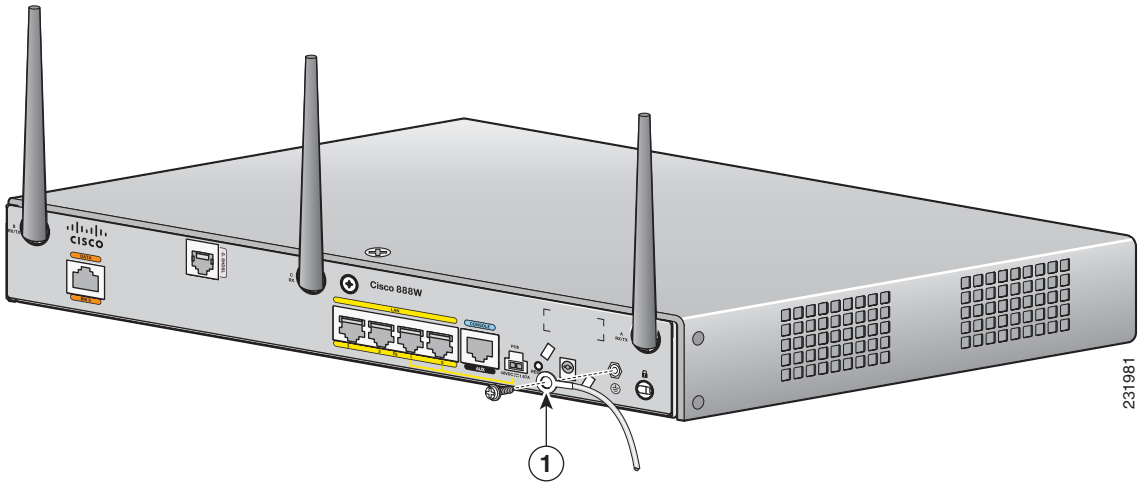

1	Ring terminal		

Step 4 Connect the other end of the ground wire to a known reliable earth ground point at your site.

After you install and properly ground the router, you can connect the power wiring, the WAN and LAN cables, and the cables for administrative access as required for your installation.

Installing the FIPS Cover

To install the FIPS cover in the router, perform these steps:

Step 1 Remove the four mounting screws of the top cover.

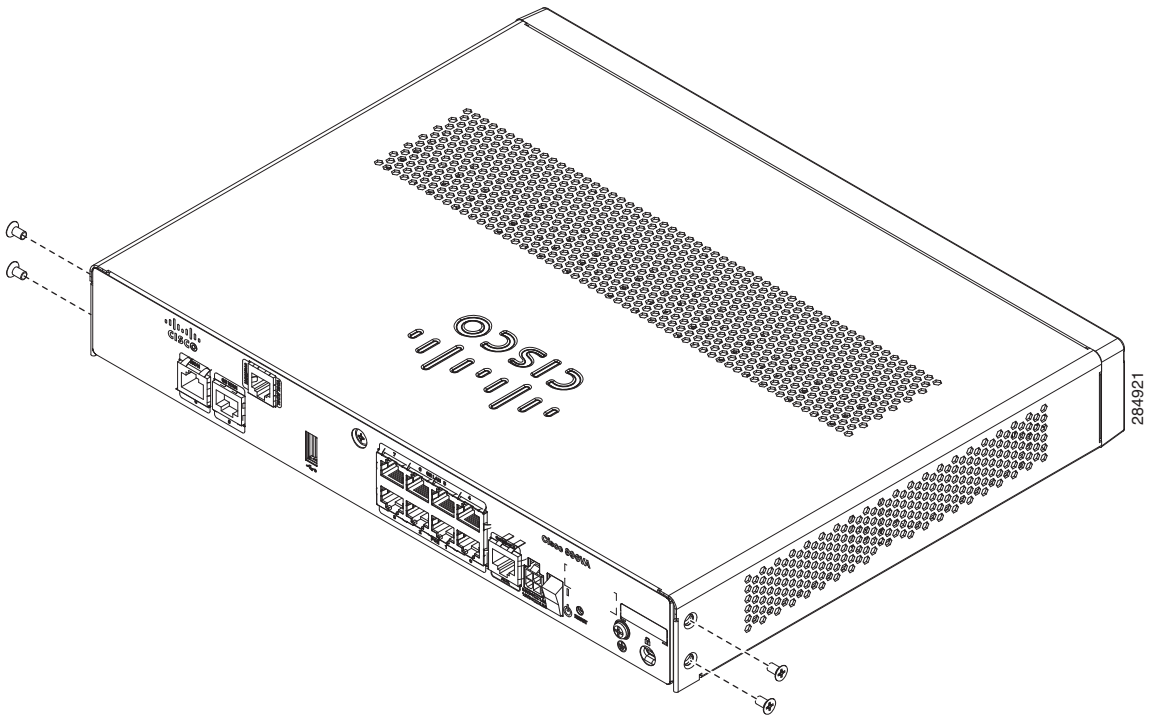

Step 2 Install the left-side FIPS cover, as shown in detail A.

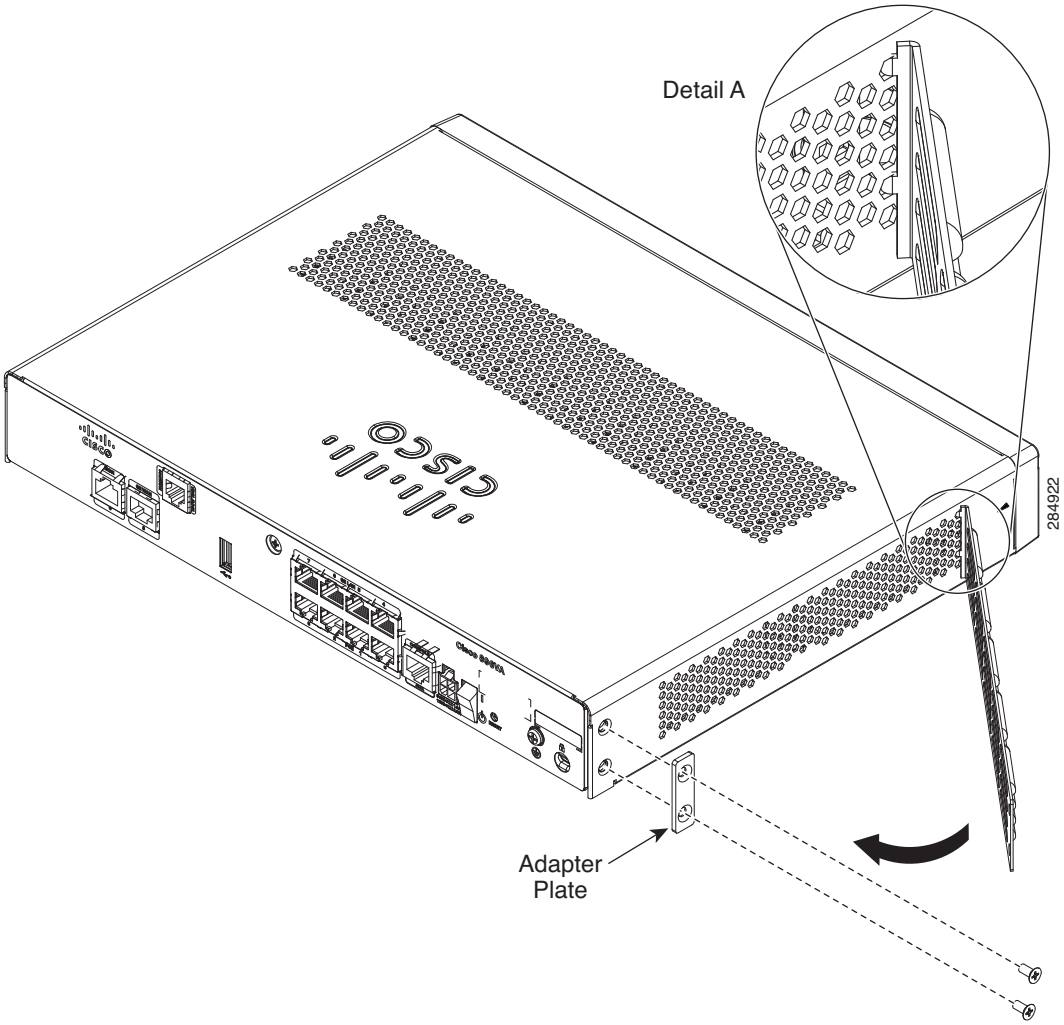

Step 3 Rotate and bring into the close position to hinge to the correct hexagon.

Step 4 Place the adapter plate before closing by aligning the mounting holes.

Step 5 Secure the FIPS cover with two mounting screws.

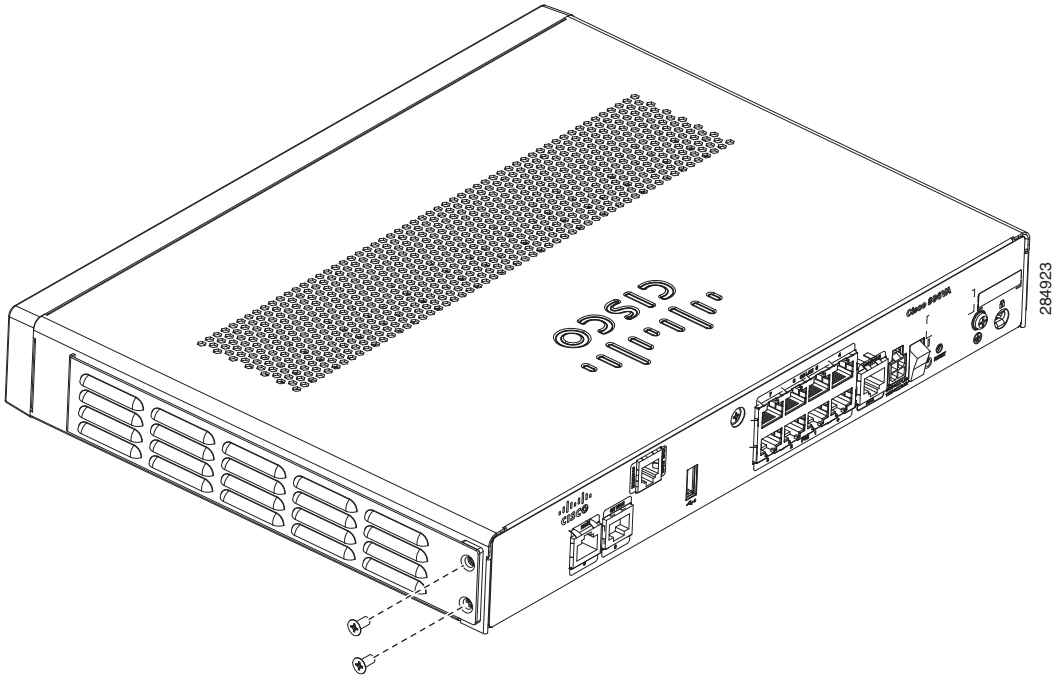

Step 6 Install the right-side FIPS cover the same way as the left-side FIPS cover.

Step 7 View after both covers are installed.

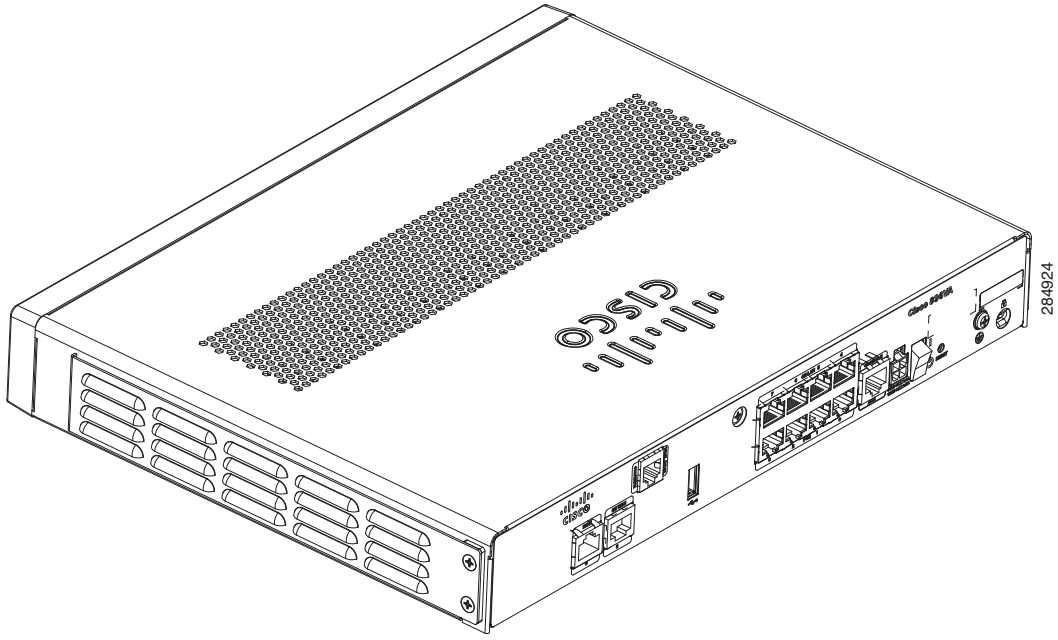

Step 8 If the FIPS covers are installed with the rack mount brackets, the adapter plates are not required in the installation.

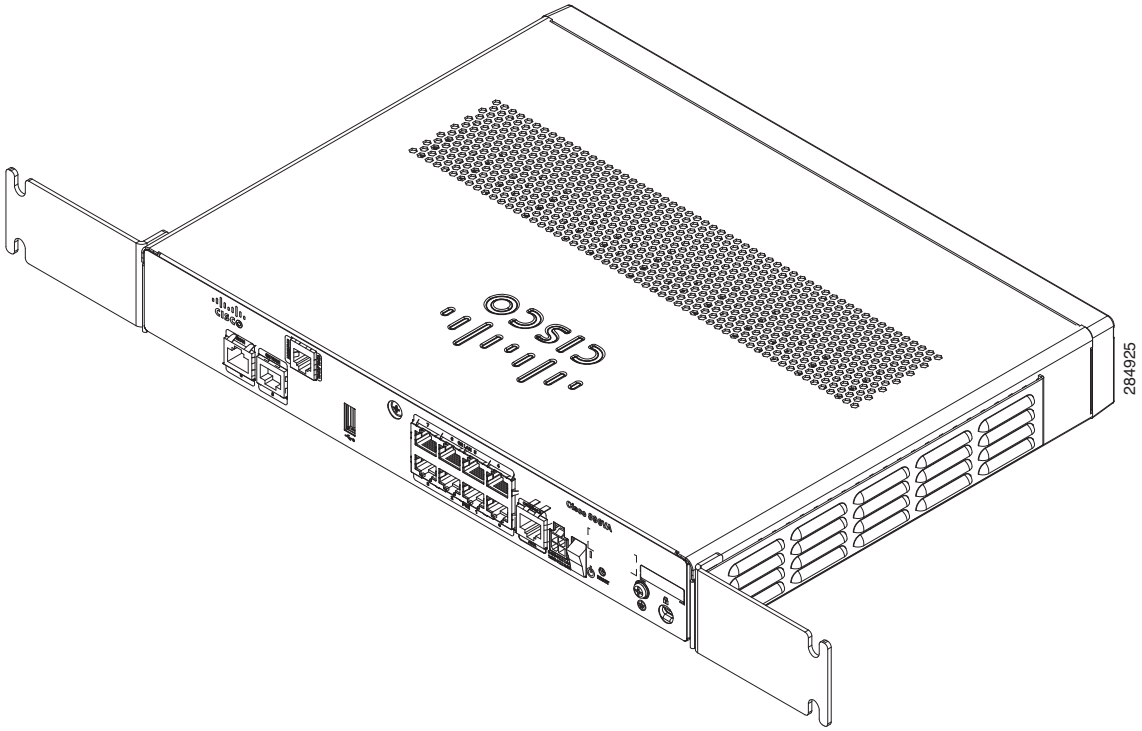

Installing Antennas for Cisco 890 Series

The Cisco 890 series wireless routers have three reverse-polarity threaded Neill-Concelman (RP-TNC) connectors on the back panel. The antennas that are shipped with the router are dual-band 2.4-GHz to 5-GHz omnidirectional dipole antennas.

Warning **All wireless LAN products in the 5.2/5.3GHz band cannot be used outdoors. Use the product only indoors.** Statement 372

Note Before you install the Cisco 890 series wireless router on a table, wall, or rack, connect the antennas to the back panel. It is difficult to attach the antennas after the router is installed.

To attach the radio antennas to your wireless router, follow these steps:

Step 1 Manually screw the antennas tight to the RP-TNC connectors on the back of the router.

Figure 2-45 Attaching Antennas to the Router

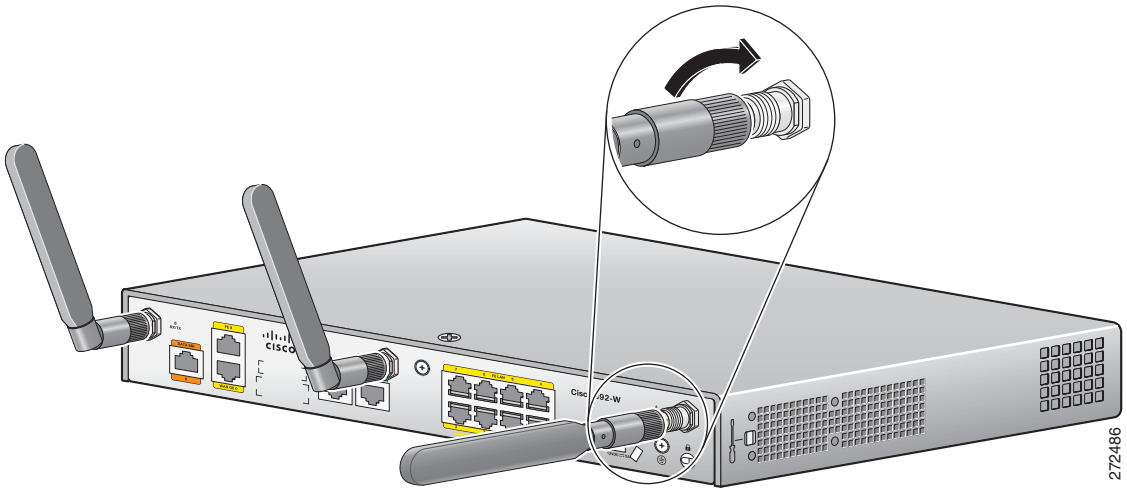

Step 2 Orient the antennas. For optimum wireless performance, the antennas should be perpendicular with respect to the floor.

a. If the router is being mounted on a desk, orient the antennas straight up.

b. If the router is being mounted on a wall, orient the antennas perpendicular to the floor, as shown in Figure 2-46 and Figure 2-47.

Figure 2-46 Antennas Oriented Vertically Up

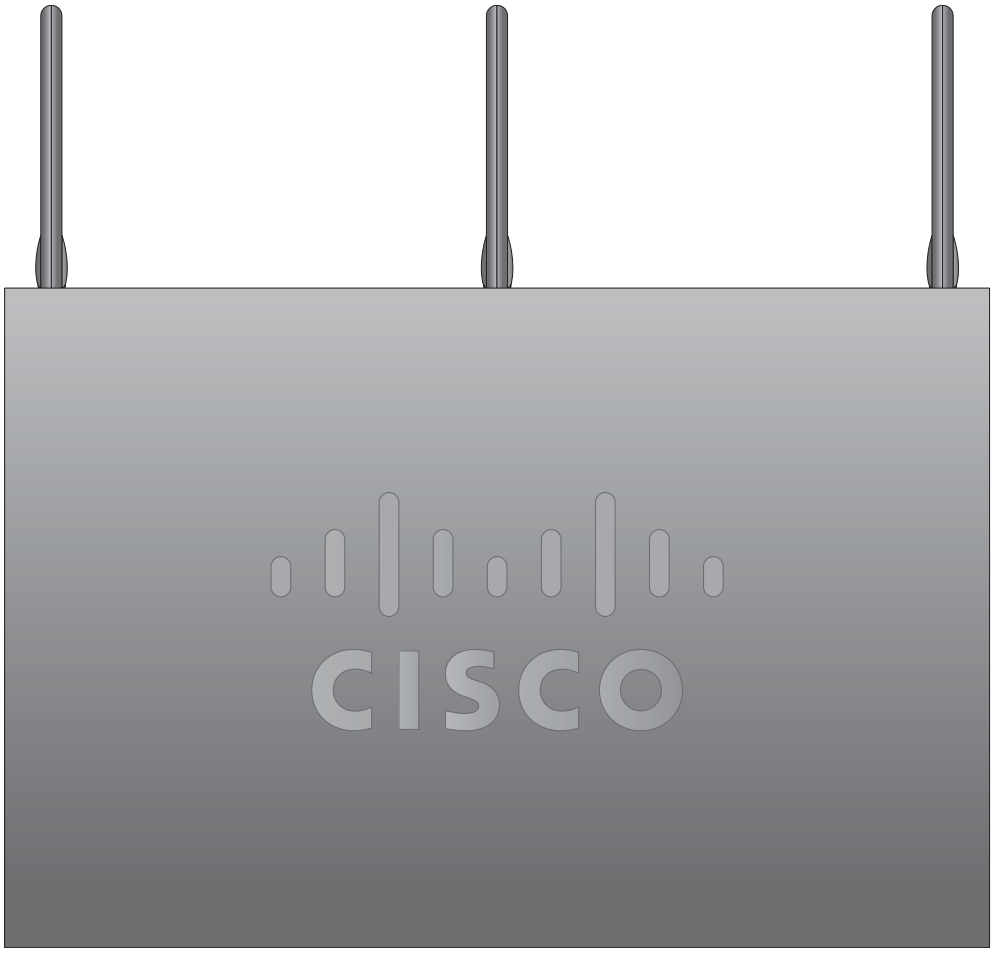

Figure 2-47 Antennas Oriented Vertically Down

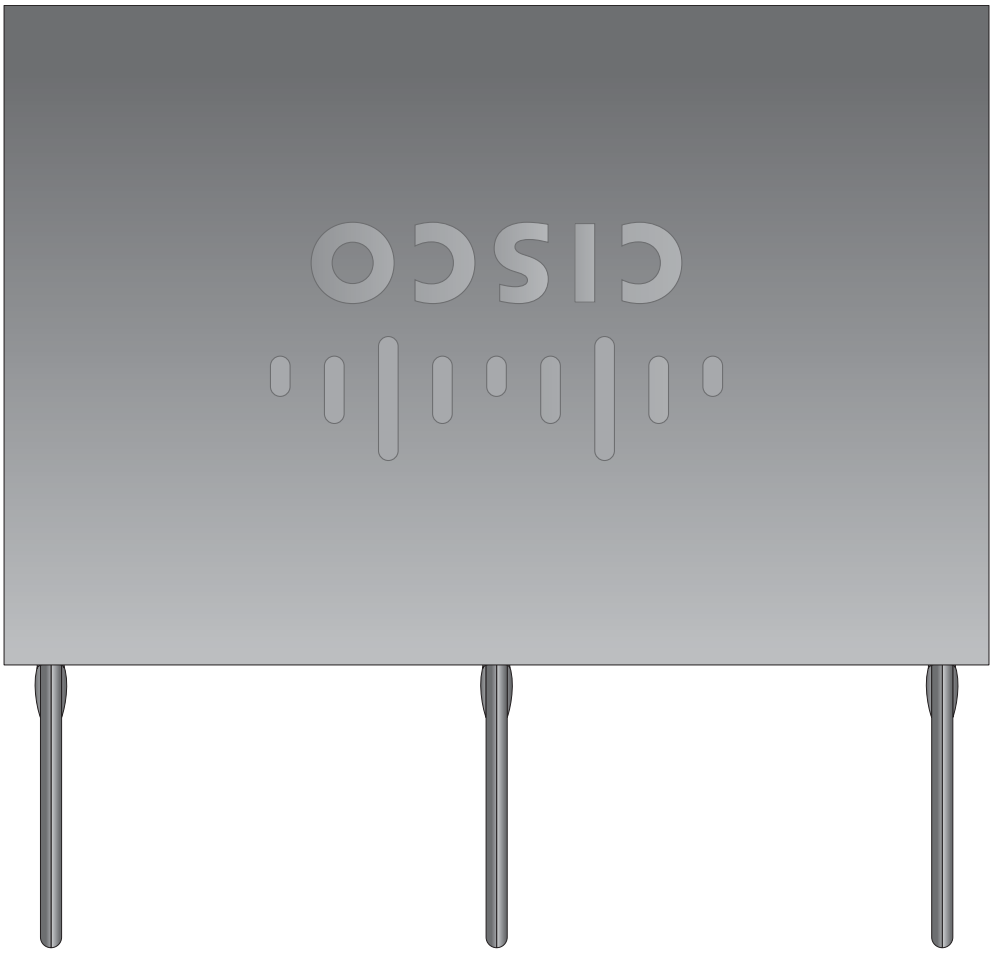

Installing Cisco 890 Series in a Rack

The Cisco 890 series ISRs can be mounted in a rack.

To install a Cisco 890 series ISR in a rack, follow these steps:

Step 1 Remove the screws, as shown in Figure 2-48.

Figure 2-48 Screw Locations

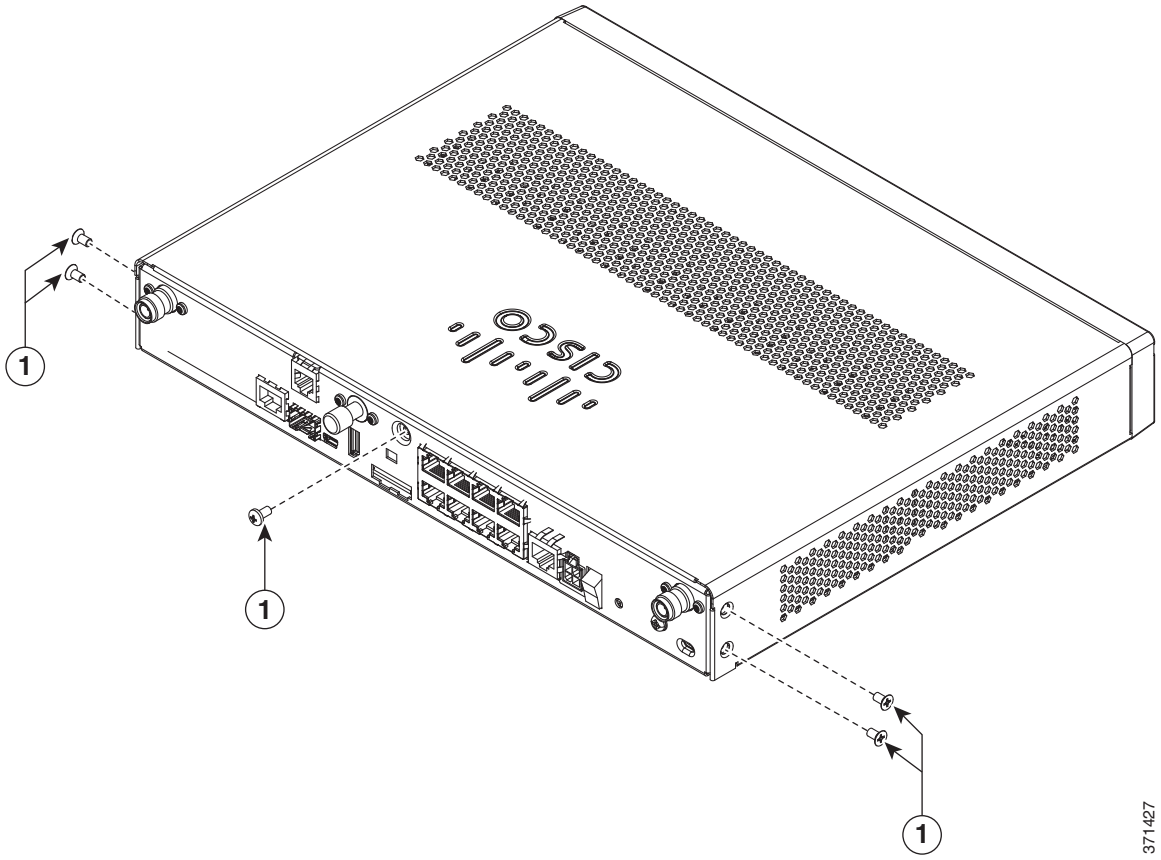

1	Screws		

Step 2 Using the screws provided, attach the rack-mount brackets to the Cisco 890 series ISR chassis, as shown in Figure 2-49. Use two screws on each side. Use a number 2 Phillips screwdriver to install the bracket screws on both sides of the chassis.

Caution Do not over torque the screws. The recommended torque is 6 to 8 in-lb (0.7 to 0.9 N-m).

Figure 2-49 Attaching the Rack-mount Brackets to the Cisco 890 Series ISR

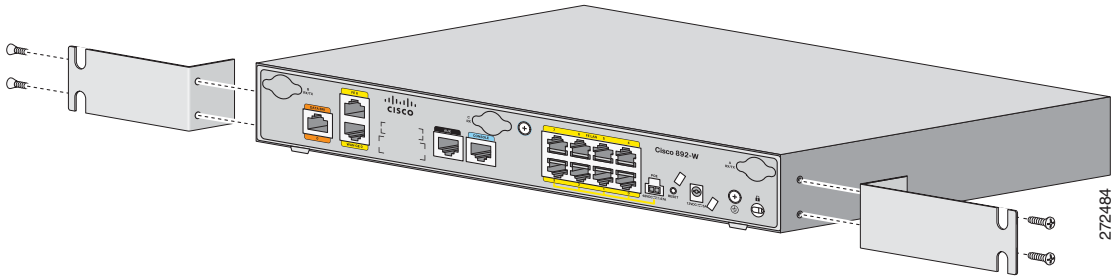

Caution Chassis installation must allow unrestricted airflow for chassis cooling.

Warning **To prevent bodily injury when mounting or servicing this unit in a rack, you must take special precautions to ensure that the system remains stable. The following guidelines are provided to ensure your safety:**

- **This unit should be mounted at the bottom of the rack if it is the only unit in the rack.**
- **When mounting this unit in a partially filled rack, load the rack from the bottom to the top with the heaviest component at the bottom of the rack.**
- **If the rack is provided with stabilizing devices, install the stabilizers before mounting or servicing the unit in the rack.** Statement 1006

Step 3 Using two screws for each side (supplied with the rack), attach the Cisco 890 series ISR with rack-mount brackets to a 19-inch rack. Start with the lower pair of screws first, resting the brackets on the lower screws while you insert the upper pair of screws.

Note Be sure to leave space above and below each unit in a rack to allow for cooling air circulation.

Note Do not stack equipment directly above the router. Keep at least 1 rack unit of space above the router.

Tip The screw slots in the brackets are spaced to line up with every second pair of screw holes in the rack. When the correct screw holes are used, the small threaded holes in the brackets line up with unused screw holes in the rack. If the small holes do not line up with the rack holes, you must raise or lower the brackets to the next rack hole.

Step 4 Place the power adapter on a nearby horizontal surface.

Step 5 Connect the chassis to a reliable earth ground. For the chassis ground connection procedures, see the "Installing Cisco 890 Series in a Rack" section on page 2-58.

Installing the C881G-B/S/V-K9 ISR

To install the C881G-B/S/V-K9 ISR, follow the instructions in the *"Installing the Cisco 860, 880, and 890 Series Routers" section on page 2-45*.

However, the instructions for connecting the 3G card in the hardware installation guide do not apply to the C881G-B/S/V-K9 ISR because it does not have a slot for adding a SIM card. These are CDMA/EV-DO based routers and do not require a SIM card.

Installing Antennas

For instructions on installing the antennas for the Cisco 881 routers, please refer to the *"Installing Antennas" section on page 2-60.*

Installing the C881GW-S/V-A-K9 ISR

To install the C881GW-S-A-K9 and C881GW-V-A-K9 ISRs, follow the instructions in the *"Installing the Cisco 860, 880, and 890 Series Routers" section on page 2-45* section.

However, the instructions for connecting the 3G card in the hardware installation guide do not apply because these ISRs do not have a slot for adding a 3G card. Instead, a 3G modem is embedded in the router.

Installing Antennas

For instructions on installing the antennas for the Cisco 881 routers, please refer to the *"Installing Antennas" section on page 2-60.*

Installing the C881G-U-K9 ISR

To install the C881G-U-K9 ISR, follow the instructions in the *"Installing the Cisco 860, 880, and 890 Series Routers" section on page 2-45*.

However, the instructions for connecting the 3G card in the hardware installation guide do not apply to the C881G-U-K9 ISR because it does not have a slot for adding a 3G card. Instead, a 3G modem is embedded in the router.

Installing the SIM Cards

You can install one or two SIM cards into the C881G-U-K9 ISR. Installing two SIM cards lets you take advantage of the Dual SIM feature, which provides a failover mechanism in case the primary SIM card fails.

Figure 50 shows the SIM car installation steps.

Figure 50 SIM Card Installation

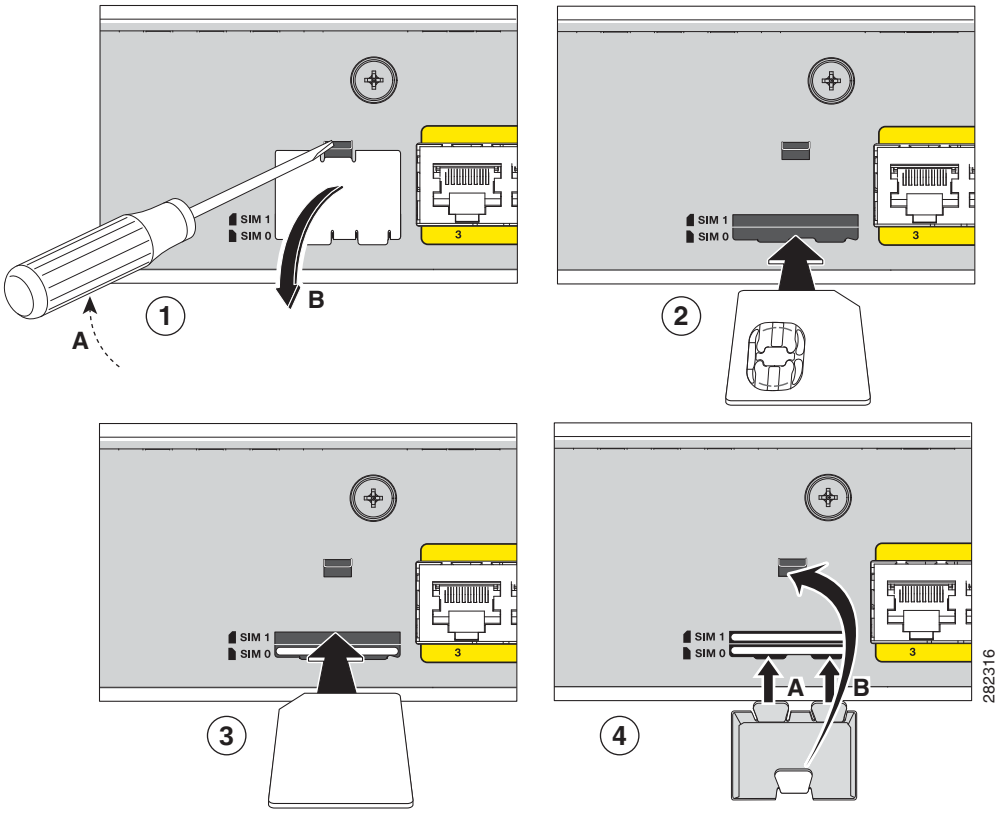

To install the SIM cards, follow these steps:

Step 1 Open the door covering the SIM card slots.

a. Insert the tip of the screw driver into the upper latch and gently disengage it as shown in the figure.

b. Remove the door as shown.

Step 2 To insert a SIM card into the SIM 0 slot, hold the SIM card with the contacts facing up as shown and gently push the card into place until it locks in.

Step 3 To insert a SIM card into the SIM 1 slot, hold the SIM card with the contacts facing down as shown and gently push the card into place until it locks in.

Step 4 Reattach the door.

a. Insert the door's bottom latches as shown.

b. Insert the door's upper latch into place as shown.

Installing the Cisco 880G for 3.7G (HSPA+)/3.5G (HSPA) ISRs

To install the C881G+7-K9, C886VAG+7-K9, C887VAG+7-K9, C887VAMG+7-K9, C888EG+7-K9, C881GW+7-A-K9, C881GW+7-E-K9, C887VAGW+7-A-K9, and C887VAGW+7-E-K9 ISRs, follow the instructions in the *"Installing the Cisco 860, 880, and 890 Series Routers" section on page 2-45*.

However, the instructions for connecting the 3G card in the hardware installation guide do not apply because these ISRs do not have a slot for adding a 3G card. Instead, a 3G modem is embedded in the router.

Connecting the Router

This chapter describes how to install the Cisco 860, 880, 890 ISRs and the Cisco 819 ISR.

- Cisco 810 Series, page 3-1
- Cisco 860, 880, 890 Series, page 3-8

Cisco 810 Series

Cisco 819 Series

This section describes how to connect Cisco 819 ISRs to Ethernet devices and a network. The section contains the following topics:

- Preparing to Connect the Router, page 3-1
- Connecting a PC, Server, or Workstation, page 3-2
- Connecting an External Ethernet Switch, page 3-3
- Connecting a Terminal or PC to the Console Port, page 3-4
- Connecting a Modem to the Console Port, page 3-5
- Connecting the AC Adapter, page 3-5
- Connecting the DC Adapter, page 3-6
- Verifying Connections, page 3-7

Note For compliance and safety information, see the Regulatory Compliance and Safety Information Roadmap that ships with the router and *Regulatory Compliance and Safety Information for Cisco 800 Series Routers.*

Preparing to Connect the Router

Before you connect the router to the devices, install the router according to the instructions in the "Installing the Router" section on page 2-22.

Preventing Damage to the Router

To prevent damage to your router, follow these guidelines when connecting devices to your router:

- Turn off power to the devices and to the router until all connections are completed.

Caution Do not turn on the devices until after you have completed all connections to the router.

- If you must supply your own cable, see the "Cisco 860, 880, 890 Series" section on page A-11 for cabling specifications. If this appendix does not provide specifications for a particular cable, we strongly recommend ordering the cable from Cisco.

Connecting a PC, Server, or Workstation

To connect a PC (or other Ethernet devices) to an Ethernet switch port, follow these steps:

Step 1 Connect one end of the yellow Ethernet cable to an Ethernet switch port on the router. See Figure 3-1.

Figure 3-1 Connecting a Server, PC, or Workstation

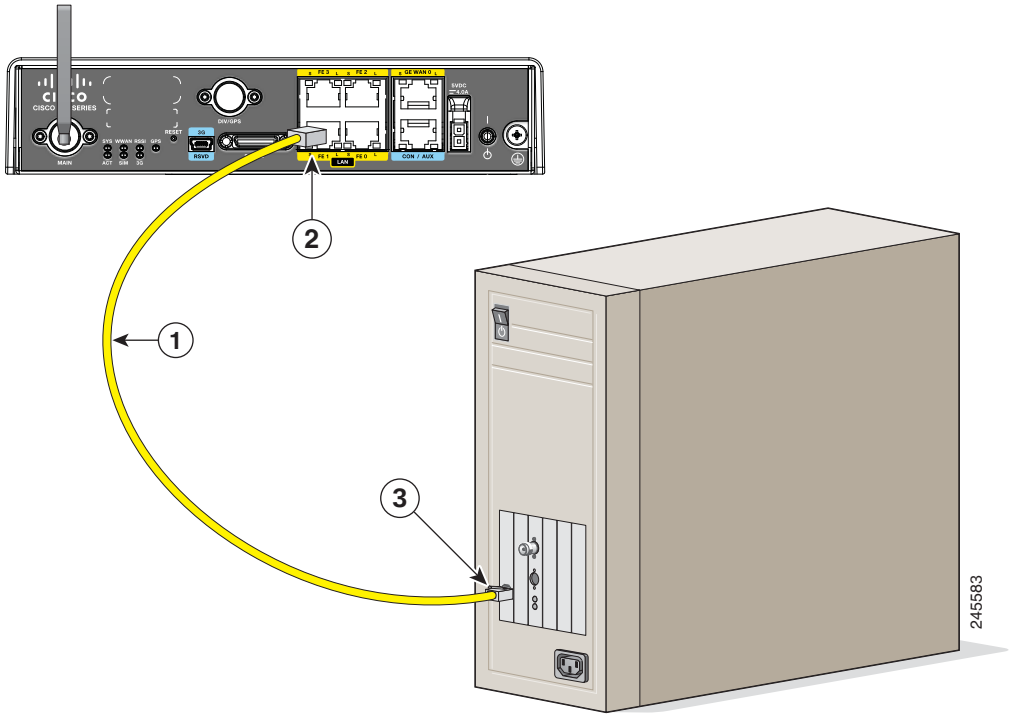

1	Yellow Ethernet cable	**3**	RJ-45 port on the network interface card
2	Ethernet switch port on the router		

Step 2 Connect the other end of the cable to the RJ-45 port on the network interface card (NIC) that is installed in the PC, server, or workstation.

Step 3 (Optional) Connect additional servers, PCs, or workstations to the other Ethernet switch ports.

Note Use the Cisco Configuration Express to configure the Internet connection settings. See *Cisco Configuration Professional Quick Start Guide* for more information.

Connecting an External Ethernet Switch

If more than four PCs in an office must be connected to each other, you can add Ethernet connections to the router by connecting an external Ethernet switch to the Ethernet switch on the router.

To connect an external Ethernet switch to an Ethernet switch port on the router, perform these steps:

Step 1 Connect one end of the yellow Ethernet cable to an Ethernet switch port on the router. (See Figure 3-2.)

Figure 3-2 Connecting to an Ethernet Switch

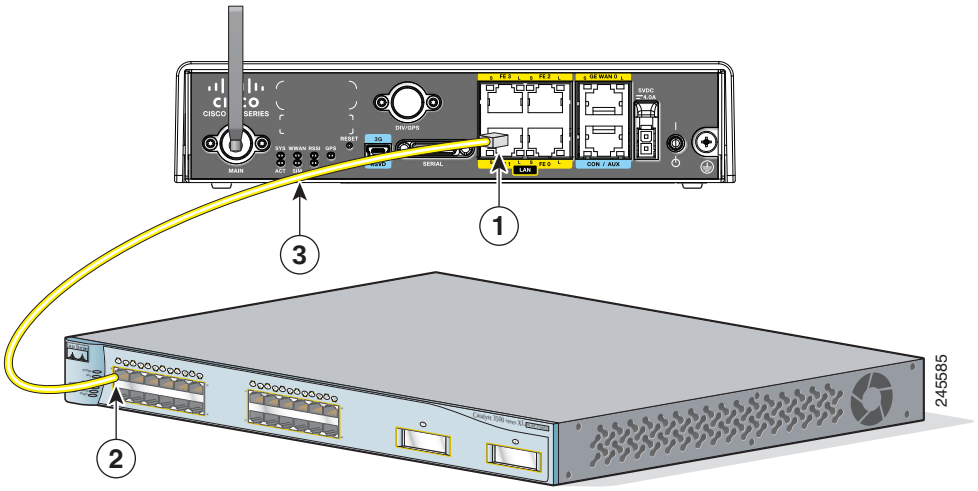

1	Ethernet switch port on the router	**3**	Yellow CAT5 Ethernet cable, RJ-45–to–RJ-45, connecting to an external Ethernet switch port
2	Available port on the external Ethernet switch		

Step 2 Connect the other end of the cable to the available port on the Ethernet switch to add additional Ethernet connections.

Step 3 Turn on the Ethernet switch.

Connecting a Terminal or PC to the Console Port

Connect a terminal or PC to the Console port either to configure the software by using the CLI or to troubleshoot problems with the router.

To connect a terminal or PC to the console port on the router and access the CLI, follow these steps:

Step 1 Connect the RJ-45 end of a DB-9-to-RJ-45 serial cable to the RJ-45 Console port on the router. Figure 3-3 shows the RJ-45 end of the serial cable connected to the Console port on the router.

Figure 3-3 Connecting a Terminal or PC to the Console Port

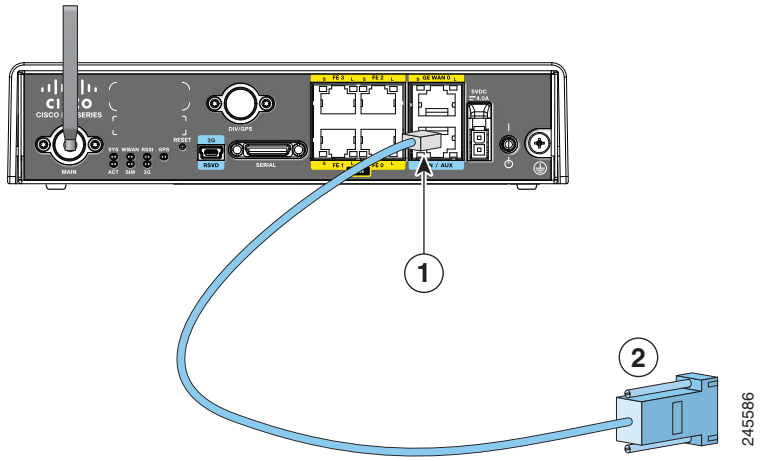

1	RJ-45 connector to the Console Aux port on the router	**2**	DB-9 connector

Step 2 Connect the DB-9 end of the DB-9-to-RJ-45 serial cable to the COM port on your laptop or PC.

Note Some laptops and PCs do not come with DB-9 serial port connectors and may require a USB-to-serial port adapter.

Step 3 To communicate with the router, start a terminal emulator application.
For more information, see the Terminal Emulator Settings, page 3-16, and *Applying Correct Terminal Emulator Settings for Console Connections*.

Connecting a Modem to the Console Port

To connect a modem to the router, follow these steps:

Step 1 Connect the RJ-45 end of the adapter cable to the Console port on the router as shown in Figure 3-4.

Figure 3-4 Connecting a Modem to the Console Port

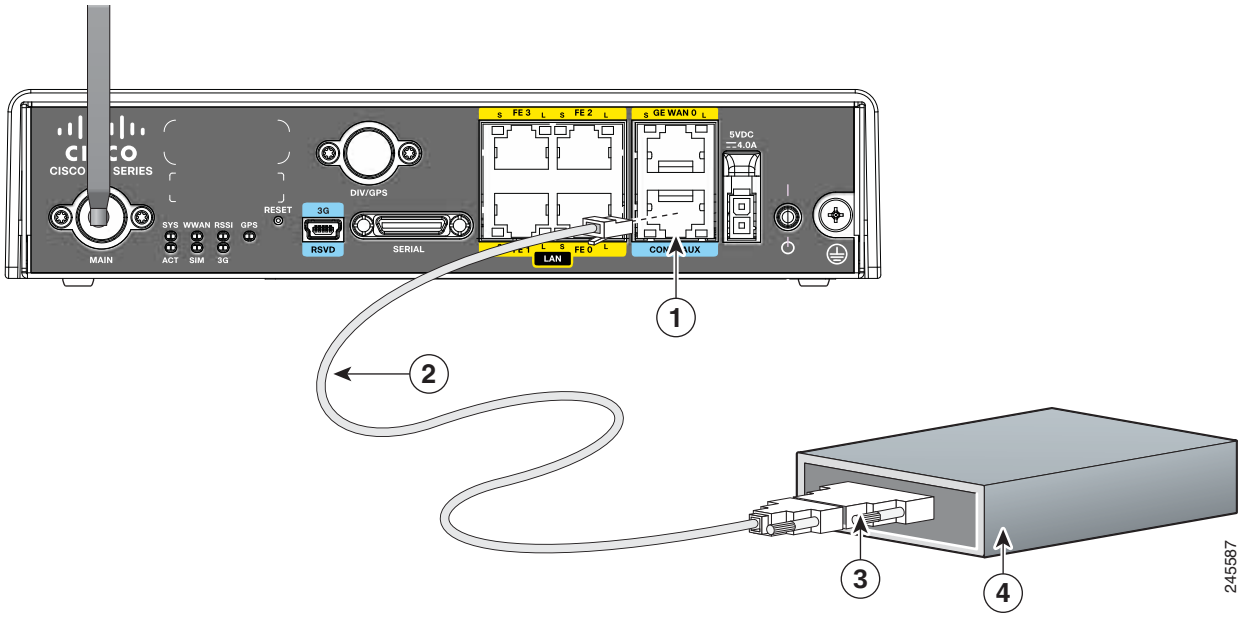

Step 2 Connect the DB-9 end of the console cable to the DB-9 end of the modem adapter.

Step 3 Connect the DB-25 end of the modem adapter to the modem.

Step 4 Make sure that your modem and the router console port are configured for the same transmission speed (up to 115200 b/s is supported) and support mode control with data carrier detect (DCD) and data terminal ready (DTR).

Connecting the AC Adapter

Warning **The device is designed to work with TN power systems.** Statement 19

Warning **This product relies on the building's installation for short-circuit (overcurrent) protection. Ensure that the protective device is rated not greater than: 120VAC, 20A U.S (240VAC, 16 to 20A international).** Statement 1005

Warning **This product requires short-circuit (overcurrent) protection, to be provided as part of the building installation. Install only in accordance with national and local wiring regulations.** Statement 1045

To connect your Cisco 819 ISR to an AC power outlet, follow these steps:

Step 1 Connect the AC adapter to an AC power outlet.

Step 2 Plug the adapter cord into the router.

Connecting the DC Adapter

Warning **This product relies on the building's installation for short-circuit (overcurrent) protection. Ensure that the protective device is rated not greater than 36 VDC, 5A** Statement 1005

Warning **This product requires short-circuit (overcurrent) protection, to be provided as part of the building installation. Install only in accordance with national and local wiring regulations.** Statement 1045

Warning **The device is designed to work with TN power systems.** Statement 19

To connect the DC power on your Cisco 819 ISR, follow these steps:

Step 1 Connect the black and white lead wires to a 12 VDC source.
The black lead is negative or ground and the white lead is positive. The output cable is 1.3 meters while the input cable is 1 meter in length. (See Figure 3-5 and Figure 3-6.). For the complete list of supported power adapters, see the "Supported Power Adapters" section on page A-9.

Figure 3-5 DC Power Supply PWR1-20W-12VDC and PWR1-20W-24VDC

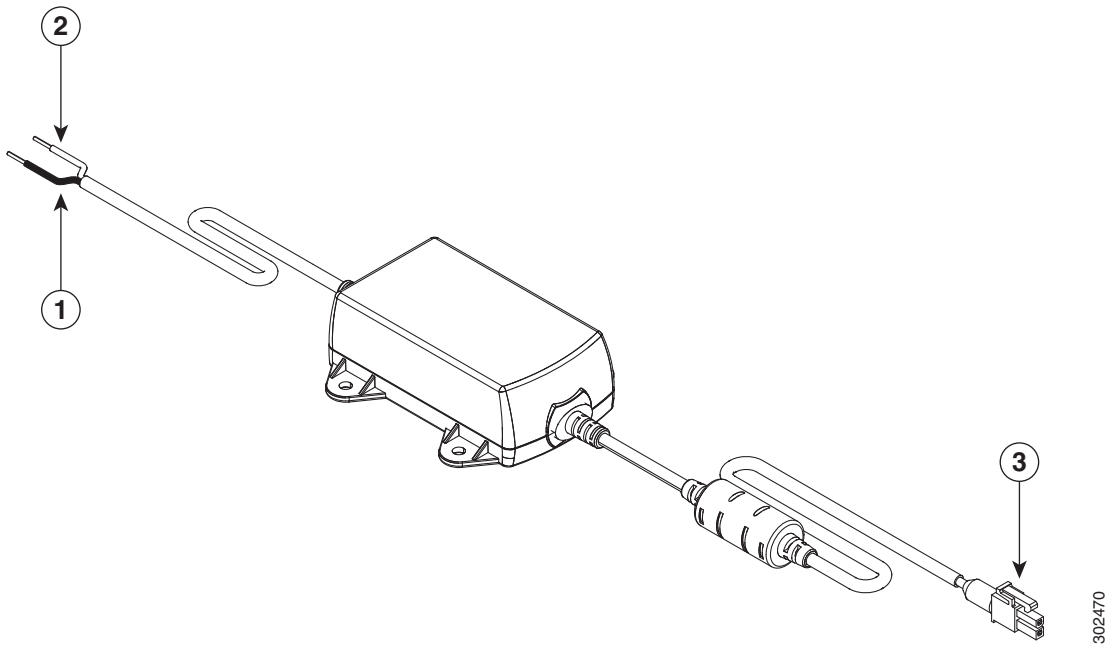

Figure 3-6 DC Power Supply PWR2-20W-12VDC and PWR2-20W-24VDC

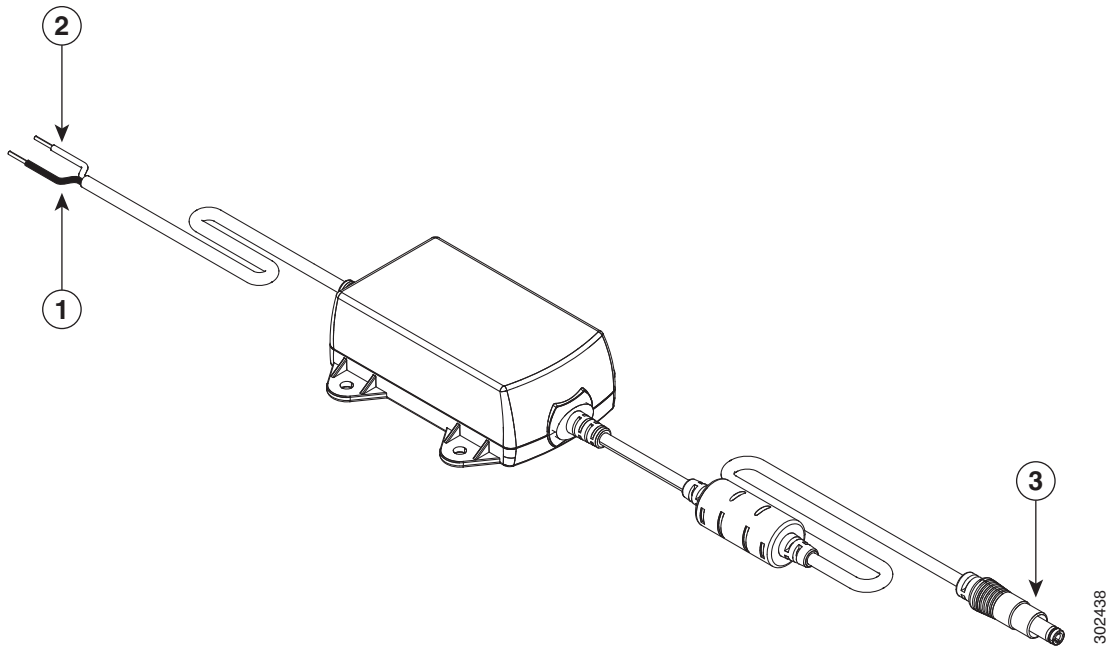

1	Black wire (negative)	**3**	Adapter
2	White wire (positive)		

Step 2 Plug the adapter cord into the router.

Note The power adapters have 18 AWG wires for the input connection. Tinned bare wires are used for the input connection as there is no standard established for connector type. Screw terminal blocks are most often used.

Verifying Connections

To verify that all devices are properly connected to the router, first turn on all the connected devices, then check the LEDs. To verify router operation, refer to Table 3-1.

For full LED description, see Table 1-45.

Table 3-1 Verifying the Router Operation

Power and Link	LEDs to Check	Normal Patterns
SYS	Yellow	FPGA download is complete.
	Green (blinking)	ROMMON is operational.
	Off	After powering up, when FPGA is being downloaded (in ROMMON).

Table 3-1 Verifying the Router Operation (continued)

Power and Link	LEDs to Check	Normal Patterns
ACT	Green	Network activity on FE Switch ports, GE WAN port, 3G cellular interface, and serial interfaces.
	Off	No network activity.

Cisco 860, 880, 890 Series

This section describes how to connect Cisco 860 series, Cisco 880 series, and Cisco 890 series ISRs to Ethernet devices, Power over Ethernet (PoE), and a network.

Note Depending on the features available for your router, some content in this section may not apply to your router.

The section contains the following topics:

- Safety Warnings, page 3-9
- Preparing to Connect the Router, page 3-1
- Connecting a PC, Server, or Workstation, page 3-2
- Connecting a Phone, page 3-13
- Connecting an External Ethernet Switch, page 3-3
- Connecting the V.92 modem Port, page 3-15
- Connecting a Terminal or PC to the Console Port, page 3-4
- Connecting a Modem to the Console Port, page 3-5
- Connecting the 3G Card, page 3-18
- Installing the 3G Adapter for Extended Cable/Antenna, page 3-24
- Connecting a Data BRI Port, page 3-28
- Connecting an FE Line to an FE WAN Port, page 3-30
- Connecting a GE Line to an GE WAN Port, page 3-31
- Connecting an xDSL Line, page 3-31
- Connecting Power over Ethernet, page 3-34
- Connecting the AC Adapter, page 3-5
- Connecting an FXS Line, page 3-39
- Connecting an FXO Line, page 3-40
- Connecting a Voice ISDN BRI Line, page 3-42
- Verifying Connections, page 3-7

Note For compliance and safety information, see *Regulatory Compliance and Safety Information Roadmap* that ships with the router and *Regulatory Compliance and Safety Information for Cisco 800 Series Routers.*

Note The illustrations in this chapter show a wireless router with antennas attached. Non-wireless routers do not have antennas or antenna connectors on the back panel. However, the procedures for connecting devices to the router are the same for both wireless and non-wireless routers.

Safety Warnings

Warning **When installing the product, please use the provided or designated connection cables/power cables/AC adaptors/batteries. Using any other cables/adaptors could cause a malfunction or a fire. Electrical Appliance and Material Safety Law prohibits the use of UL-certified cables (that have the "UL" or "CSA" shown on the cord), not regulated with the subject law by showing "PSE" on the cord, for any other electrical devices than products designated by CISCO.** Statement 371

Warning **Do not work on the system or connect or disconnect cables during periods of lightning activity.** Statement 1001

Warning **This equipment has been designed for connection to TN and IT power systems.** Statement 1007

Warning **There is the danger of explosion if the battery is replaced incorrectly. Replace the battery only with the same or equivalent type recommended by the manufacturer. Dispose of used batteries according to the manufacturer's instructions.** Statement 1015

Warning **Take care when connecting units to the supply circuit so that wiring is not overloaded.** Statement 1018

Warning **To avoid electric shock, do not connect safety extra-low voltage (SELV) circuits to telephone-network voltage (TNV) circuits. LAN ports contain SELV circuits, and WAN ports contain TNV circuits. Some LAN and WAN ports both use RJ-45 connectors. Use caution when connecting cables.** Statement 1021

Warning **Hazardous network voltages are present in WAN ports regardless of whether power to the unit is OFF or ON. To avoid electric shock, use caution when working near WAN ports. When detaching cables, detach the end away from the unit first.** Statement 1026

Warning **Only trained and qualified personnel should be allowed to install, replace, or service this equipment.** Statement 1030

Warning **Do not use this product near water; for example, near a bath tub, wash bowl, kitchen sink or laundry tub, in a wet basement, or near a swimming pool.** Statement 1035

Warning **Never install telephone jacks in wet locations unless the jack is specifically designed for wet locations.** Statement 1036

Warning **Never touch uninsulated telephone wires or terminals unless the telephone line has been disconnected at the network interface.** Statement 1037

Warning **Avoid using a telephone (other than a cordless type) during an electrical storm. There may be a remote risk of electric shock from lightning.** Statement 1038

Warning **To report a gas leak, do not use a telephone in the vicinity of the leak.** Statement 1039

Warning **Before opening the unit, disconnect the telephone-network cables to avoid contact with telephone-network voltages.** Statement 1041

Warning **This equipment contains a ring signal generator (ringer), which is a source of hazardous voltage. Do not touch the RJ-11 (phone) port wires (conductors), the conductors of a cable connected to the RJ-11 port, or the associated circuit-board when the ringer is active. The ringer is activated by an incoming call.** Statement 1042

Warning **Do not locate the antenna near overhead power lines or other electric light or power circuits, or where it can come into contact with such circuits. When installing the antenna, take extreme care not to come into contact with such circuits, because they may cause serious injury or death. For proper installation and grounding of the antenna, please refer to national and local codes (for example, U.S.:NFPA 70, National Electrical Code, Article 810, Canada: Canadian Electrical Code, Section 54).** Statement 1052

Warning **No user-serviceable parts inside. Do not open.** Statement 1073

Warning **Installation of the equipment must comply with local and national electrical codes.** Statement 1074

Preparing to Connect the Router

Before you connect the router to the devices, install the router according to the instructions in "Installing the Cisco 860, 880, 890 ISR" section on page 2-43.

Preventing Damage to the Router

To prevent damage to your router, follow these guidelines when connecting devices to your router:

- Turn off power to the devices and to the router until all connections are completed.

Caution Do not turn on the devices until after you have completed all connections to the router.

- Connect the color-coded cables supplied by Cisco to the color-coded ports on the back panel.
- If you must supply your own cable, see "Cable Specifications" section on page A-28 for cabling specifications. If this appendix does not provide specifications for a particular cable, we strongly recommend ordering the cable from Cisco.

Connecting a PC, Server, or Workstation

To connect a PC (or other Ethernet devices) to an Ethernet switch port, follow these steps:

Step 1 Connect one end of the yellow Ethernet cable to an Ethernet switch port on the router. Figure 3-1 shows a Cisco 888W router connected to a PC.

Figure 3-7 Connecting a Server, PC, or Workstation

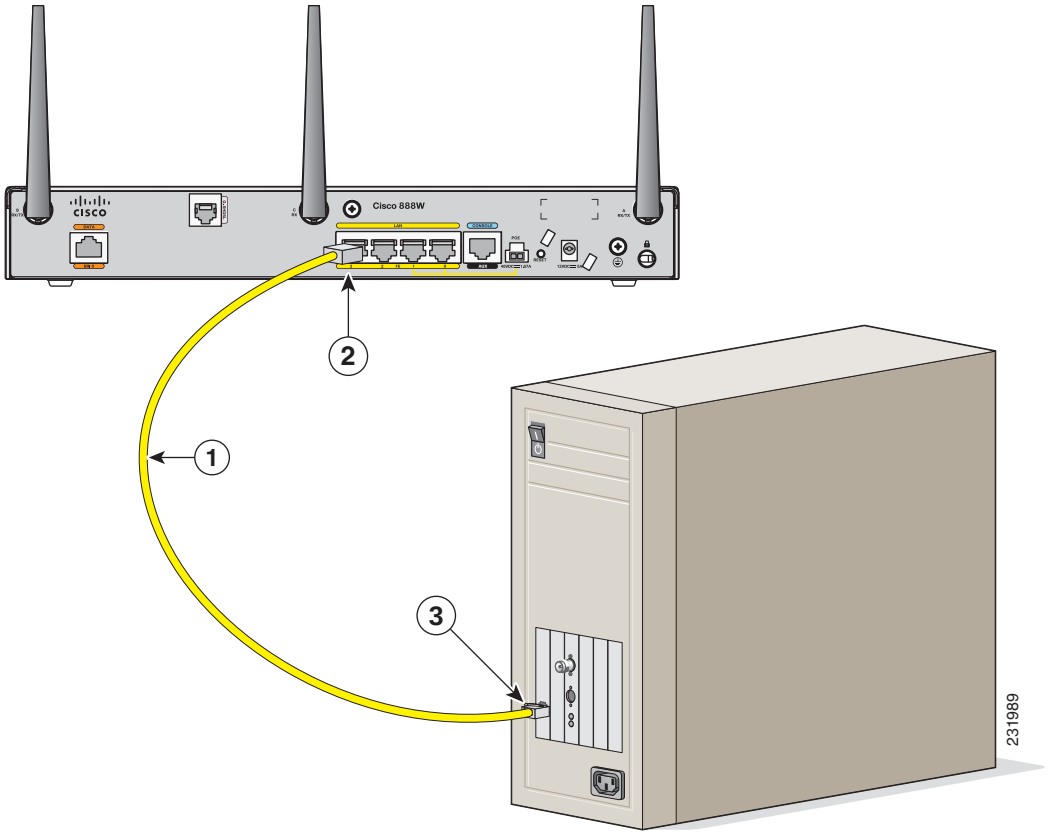

1	Yellow Ethernet cable supplied with the router	**3**	RJ-45 port on the network interface card
2	Ethernet switch port on the router		

Step 2 Connect the other end of the cable to the RJ-45 port on the network interface card (NIC) that is installed in the PC, server, or workstation.

Step 3 (Optional) Connect additional servers, PCs, or workstations to the other Ethernet switch ports.

Note Use the Cisco Configuration Express to configure the Internet connection settings. See *Cisco Configuration Professional Quick Start Guide* for more information.

Connecting a Phone

To connect an 802.3af-compliant phone to an Ethernet switch port, follow these steps:

Note A power source must be provided for the phone to function. This can be done in two ways: the phone can be powered via the PoE function using the PoE enabled Ethernet ports, or by using an external AC power source connected to the phone.

Step 1 Connect one end of the yellow Ethernet cable to Ethernet switch port 0 or port 1 on the router. Figure 3-8 shows a Cisco 888W router connected to a phone.

Figure 3-8 Connecting a Phone

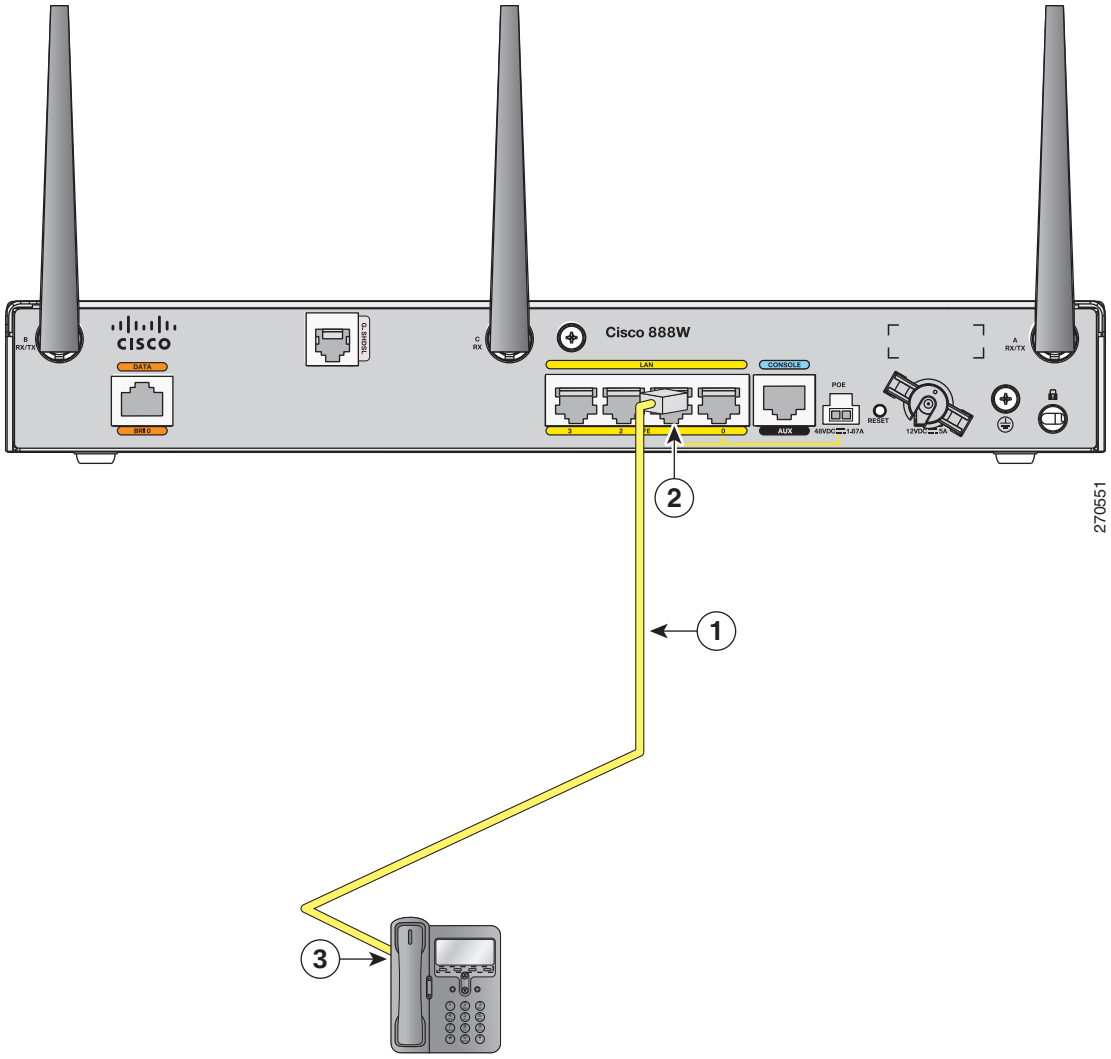

1	Yellow Ethernet cable	**3**	RJ-45 port on a phone
2	Ethernet switch port 1 on the router		

Step 2 Connect the other end of the cable to the RJ-45 port on the phone.

Connecting an External Ethernet Switch

If more than four PCs in an office must be connected to each other, you can add Ethernet connections to the router by connecting an external Ethernet switch to the Ethernet switch on the router.

To connect an external Ethernet switch to an Ethernet switch port on the router, perform these steps:

Step 1 Connect one end of the yellow Ethernet cable to an Ethernet switch port on the router. Figure 3-2 shows a Cisco 888W router connected to an Ethernet switch.

Figure 3-9 Connecting to an Ethernet Switch

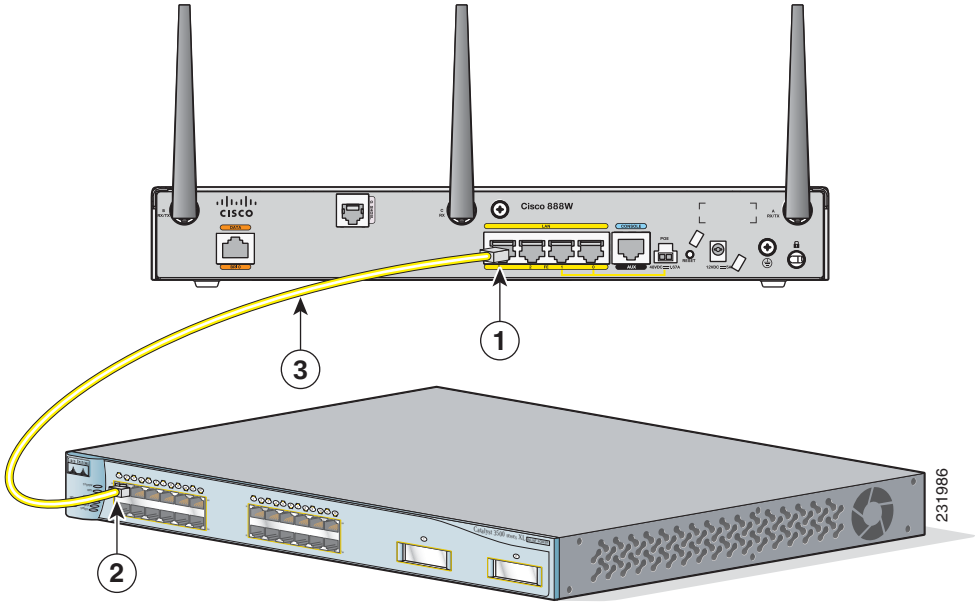

1	Ethernet switch port on the router	**3**	Yellow CAT5 Ethernet cable, RJ-45–to–RJ-45, connecting to an external Ethernet switch port
2	Available port on the external Ethernet switch		

Step 2 Connect the other end of the cable to the available port on the Ethernet switch to add additional Ethernet connections.

Step 3 Turn on the Ethernet switch.

Connecting the V.92 modem Port

Warning **Hazardous network voltages are present in WAN ports regardless of whether power to the unit is OFF or ON. To avoid electric shock, use caution when working near WAN ports. When detaching cables, detach the end away from the unit first.** Statement 1026

To connect the router to your service provide network through the V.92 port, follow these steps:

Step 1 Connect one end of the straight-through R-J11 cable to the V.92 port.

Figure 3-10 shows how to connect the router to the service provide through the V.92 port.

Figure 3-10 Connecting to Your Service Provider Through the V.92 port

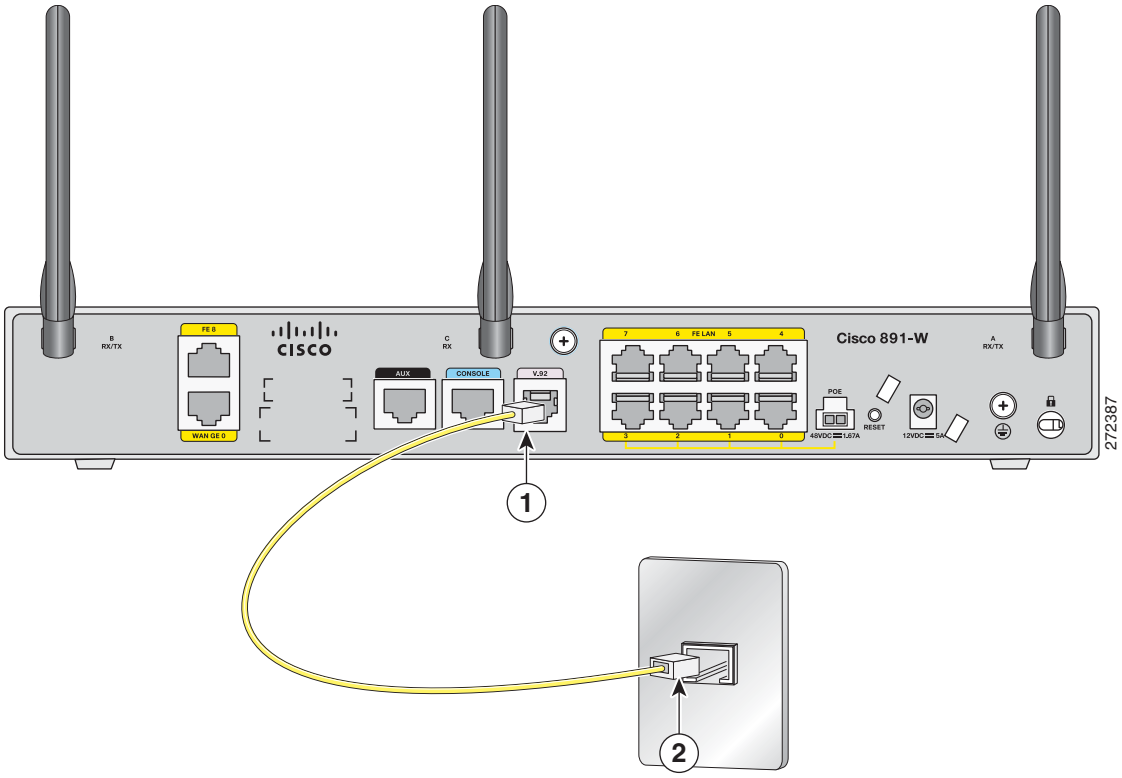

1	V.92 port on the router	**2**	Telephone wall outlet

Step 2 Connect the other end of the straight through R-J11 cable to an RJ-11 telephone wall outlet.

Connecting a Terminal or PC to the Console Port

Connect a terminal or PC to the Console Auxiliary (Aux) port either to configure the software by using the CLI or to troubleshoot problems with the router.

To connect a terminal or PC to the console port on the router and access the CLI, follow these steps:

Step 1 Connect the RJ-45 end of a DB-9–to–RJ-45 serial cable to the RJ-45 Console Aux port on the router. Figure 3-3 shows the RJ-45 end of the serial cable connected to the Console Aux port on the router.

Figure 3-11 Connecting a Terminal or PC to the Console Port

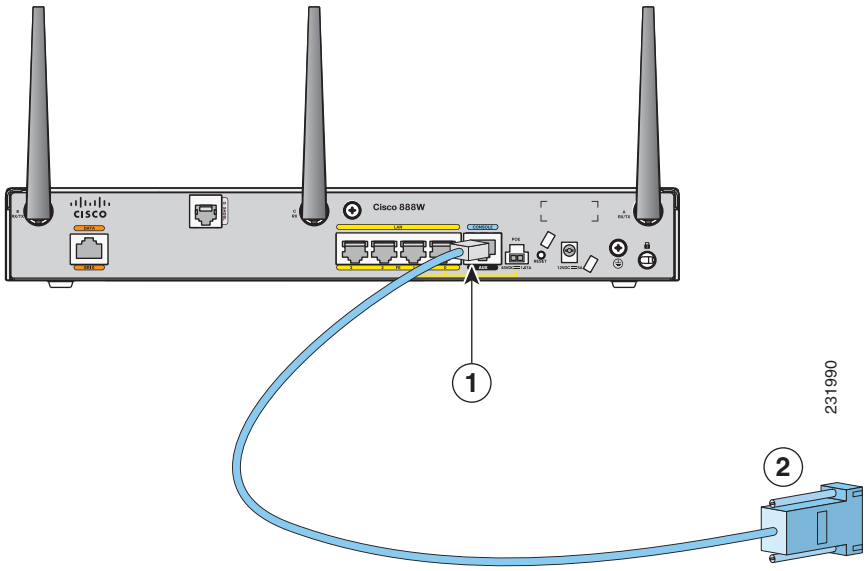

1	RJ-45 connector to the Console Aux port on the router	**2**	DB-9 connector

Step 2 Connect the DB-9 end of the DB-9–to–RJ-45 serial cable to the to the COM port on your laptop or PC.

Note Some laptops and PCs do not come with DB-9 serial port connectors and may require a USB-to-serial port adapter.

Step 3 To communicate with the router, start a terminal emulator application.

Terminal Emulator Settings

Use the following settings for the terminal emulator connection:

- 9600 baud
- 8 data bits, no parity
- 1 stop bit
- No flow control

When the terminal emulator establishes communications, the router prompt is displayed.

For more information on terminal emulation settings, see *Applying Correct Terminal Emulator Settings for Console Connections.*

Connecting a Modem to the Auxiliary Port

To connect a modem to the router, follow these steps:

Step 1 Connect the RJ-45 end of the adapter cable to the Aux port on the router as shown in Figure 3-4.

Figure 3-12 Connecting a Modem to the Aux Port

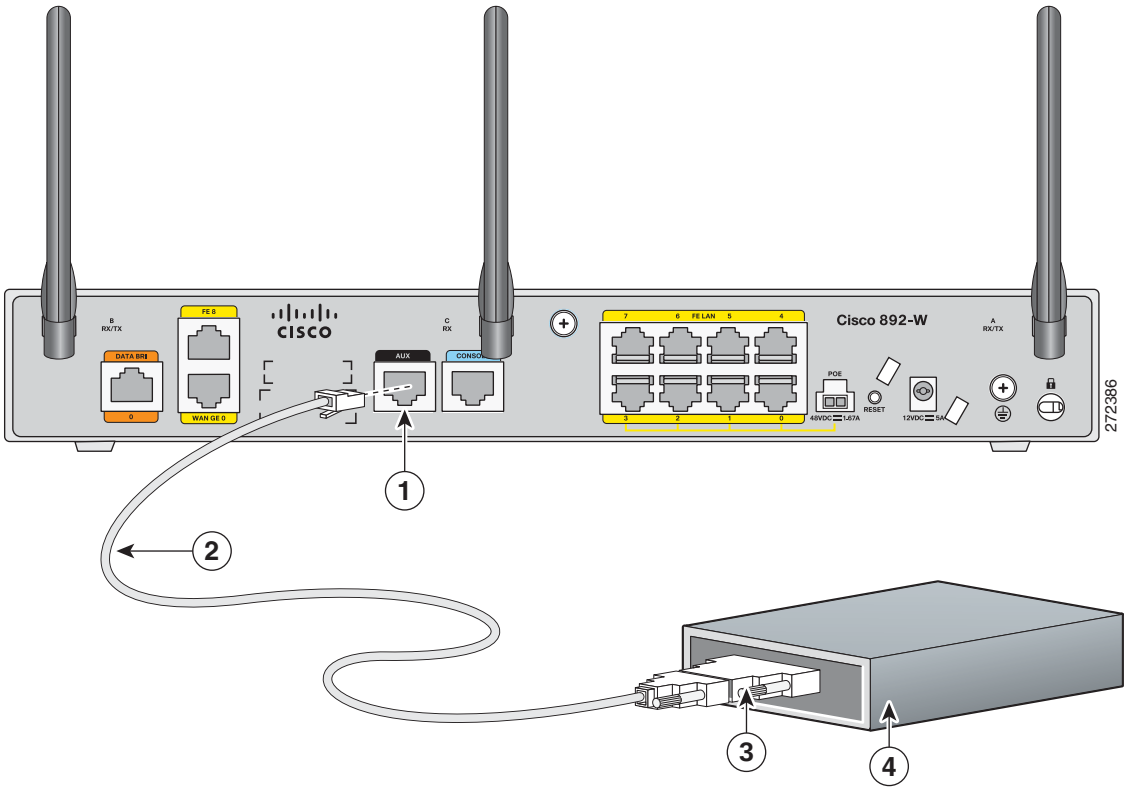

1	Aux port (RJ-45)	**3**	DB-9 to DB-25 modem adapter (if required)
2	Light blue console cable	**4**	Modem

Step 2 Connect the DB-9 end of the console cable to the DB-9 end of the modem adapter.

Step 3 Connect the DB-25 end of the modem adapter to the modem.

Step 4 Make sure that your modem and the router auxiliary port are configured for the same transmission speed (up to 115200 bits per second [b/s] is supported) and support mode control with data carrier detect (DCD) and data terminal ready (DTR).

Connecting the 3G Card

Note For information on embedded multiband, multiservice WAN modems, see *Configuring Cisco EHWIC and 880G for 3G (EV-DO Rev A)* and *Configuring Cisco EHWIC and 880G for 3.7G (HSPA+)/3.5G (HSPA)*.

Note The Cisco 880G router does not support online insertion and removal (OIR) of the 3G card. You must enter the **shutdown** command on the cellular interface before you remove the 3G card from the router.

To connect and secure the 3G card, follow these steps:

Step 1 Align the 3G card to the 3G express card slot, as shown in Figure 3-13. Keep the card parallel to the surface and firmly push the card into the slot.

Tip Holding the 3G card on the flat metal surface makes it easier to align and insert the 3G card.

Note When inserting the card into the 3G express card slot, you may hear a metal-on-metal sound as the 3G card rubs against the internal metal cage. The 3G card is designed to fit tightly into the 3G express card slot. Firm pressure may be required to insert the card.

Note Global System for Mobile Communications (GSM) customers need to insert a SIM card, provided by their network carrier, into the 3G card.

Figure 3-13 Inserting the 3G Card

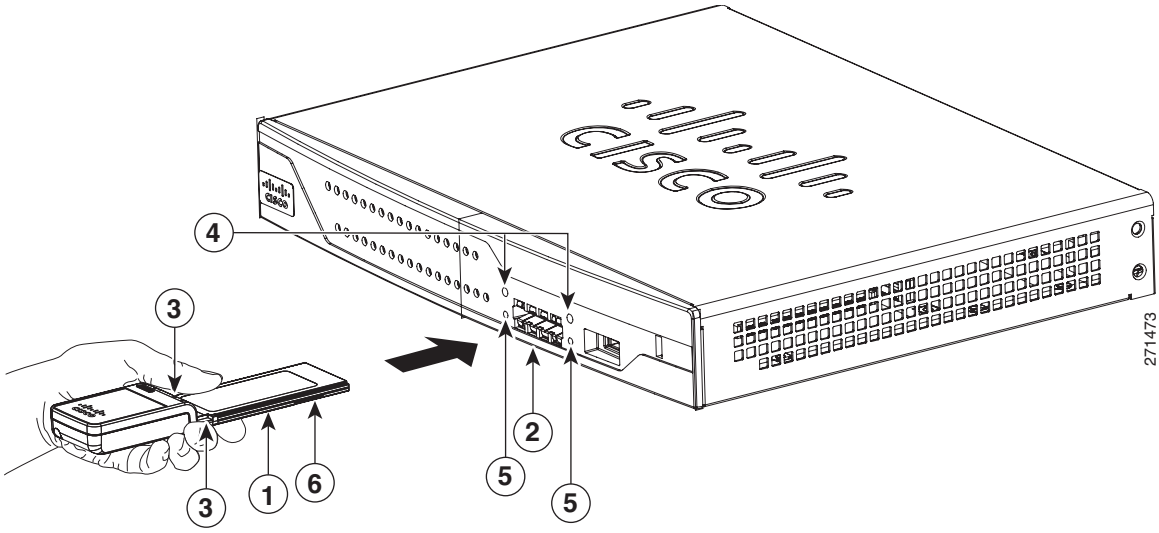

1	3G card with the Cisco logo facing up	**4**	Screw holes for locking bracket
2	3G express card slot	**5**	Pin holes for aligning the locking bracket
3	Notches on the 3G card	**6**	SIM slot (in HSPA[1] cards only)

1. HSPA = High-Speed Packet Access.

Step 2 Open the top of the anti-theft locking bracket, as shown in Figure 3-14.

Figure 3-14 Opening the Anti-theft Locking Bracket

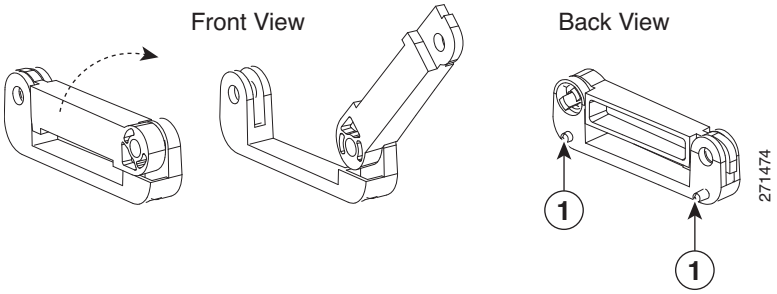

1	Pins on the locking bracket for alignment		

Step 3 Slide the opened locking bracket under the 3G card. The locking bracket should align with the notches on either side of the 3G card, as shown in Figure 3-15, and the pins on the locking bracket should be inserted into the corresponding holes in the router.

Figure 3-15 Installing the Locking Bracket

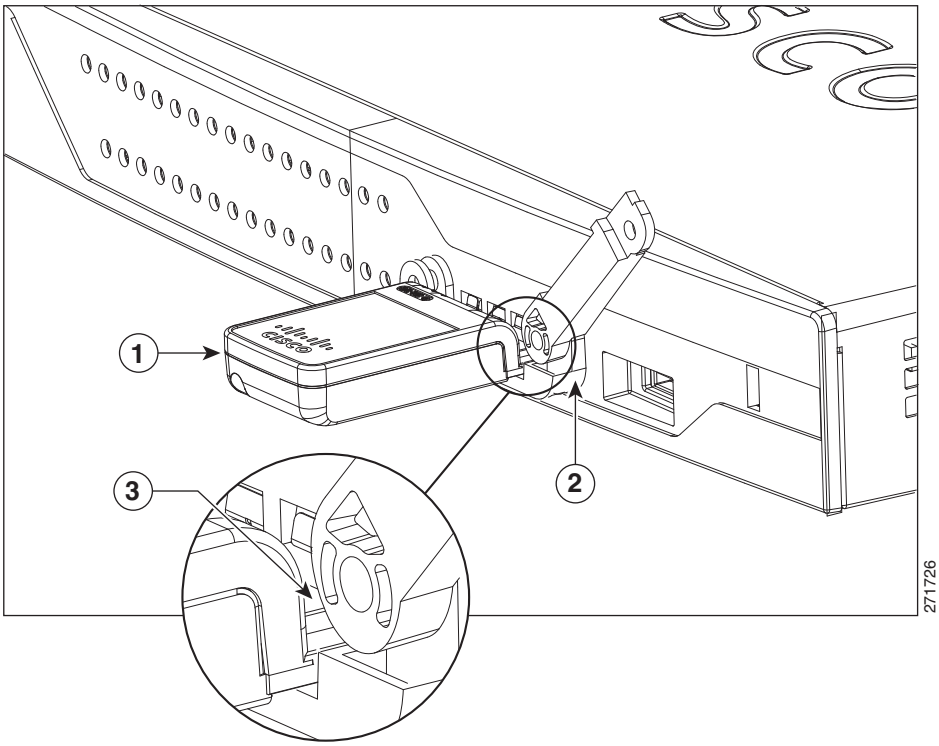

1	3G card	**3**	Notch on the 3G card
2	Locking bracket		

Step 4 Close the locking bracket, as shown in Figure 3-16.

Figure 3-16 Closing the Locking Bracket

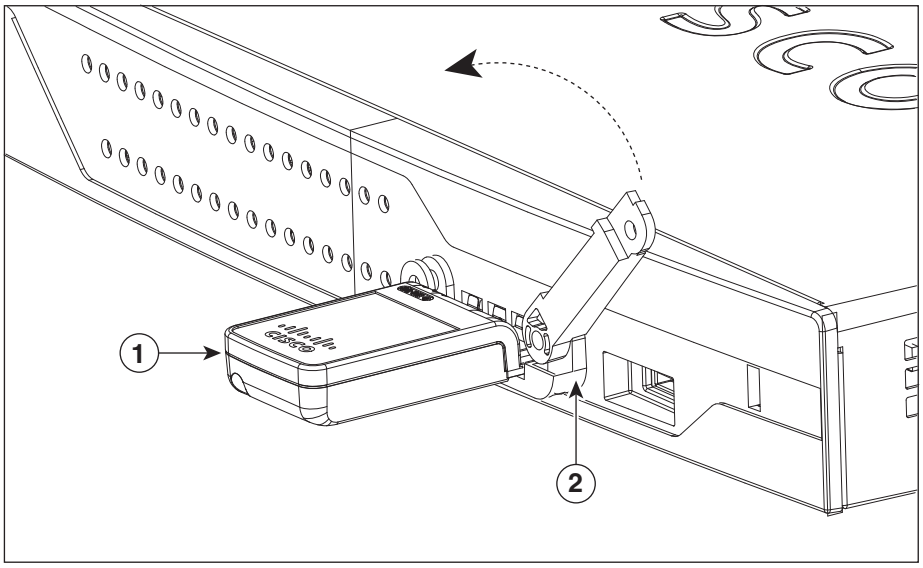

1	3G card	**2**	Locking bracket

Step 5 Insert the screws, as shown in Figure 3-17, and tighten with a number 2 Phillips screwdriver.

Figure 3-17 Inserting the Screws

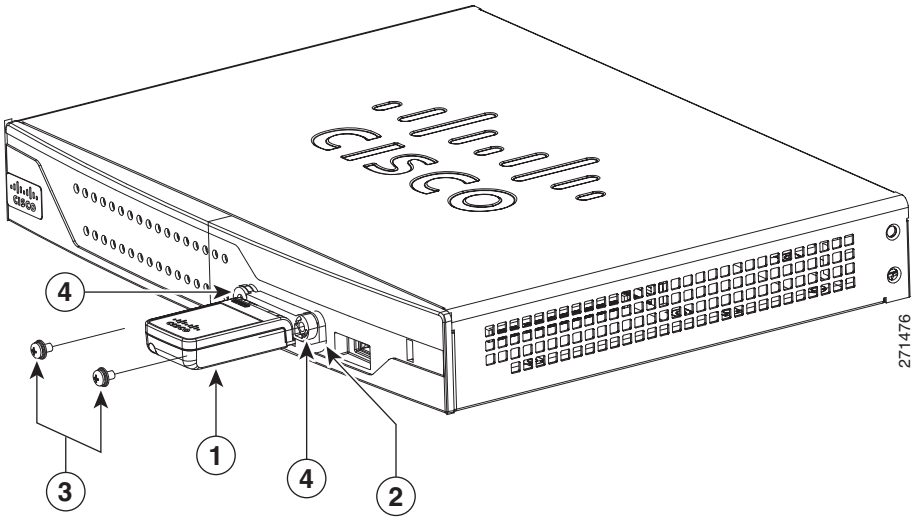

1	3G card	**3**	Screws
2	Locking bracket	**4**	Screw holes on the locking bracket

Step 6 To connect the antenna to the 3G card, insert the antenna connector into the antenna connector receptacle on the 3G card.

Note The antenna connector receptacle may be located on the left, right, or front of the 3G card, depending on your card.

Figure 3-18 and Figure 3-19 show the antenna connected to the 3G card with an SSMB type plug, and the antenna with the SMK-TS-9 connector.

Figure 3-18 Antenna connected to the 3G Card with SSMB connector

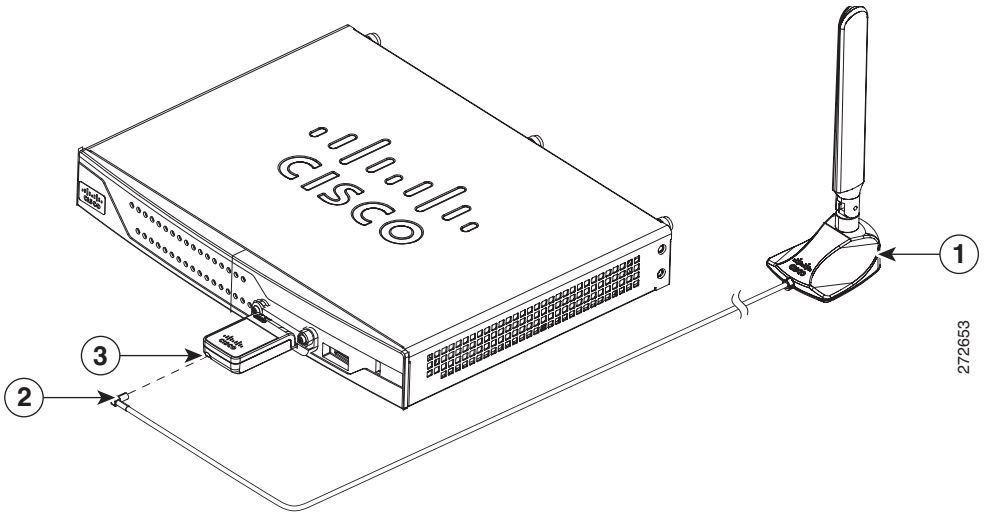

1	Antenna on a cradle	**3**	Antenna connector receptacle[1]
2	Antenna SSMB connector		

1. The antenna connector receptacle is located on either the left, right or front of the card for different SKUs. Please locate the receptacle of your card before plugging in the cable.

Figure 3-19 Antenna with the SMK-TS- 9 Connector

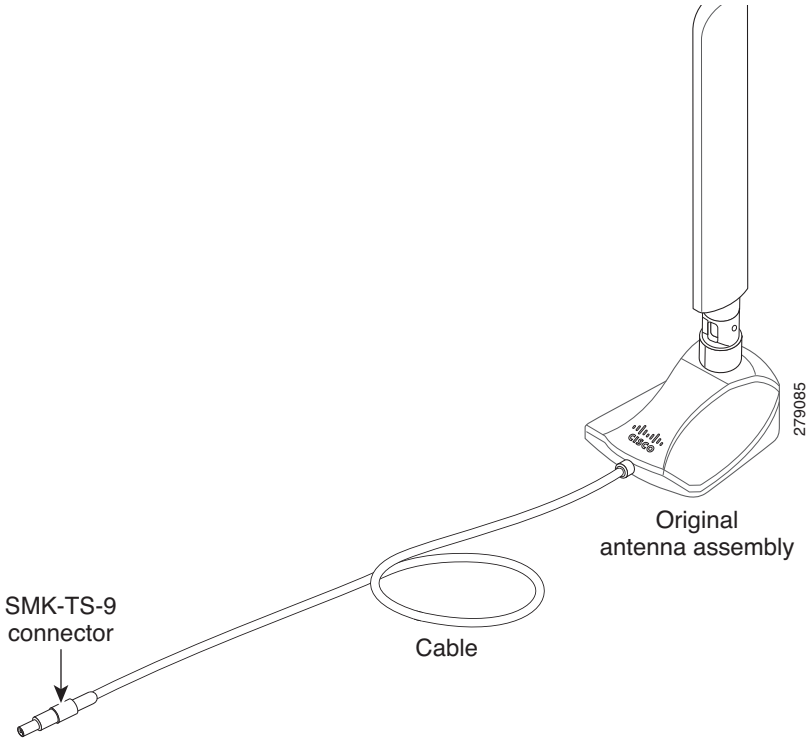

If you are using an extension cable, you must attach the 3G adapter for extended cable antenna to the body of the router. Depending on the SKU ordered, the adapters come with different connectors. Table 3-2 lists the different adapters and SKUs supported by each adapter. For instructions on how to install the adapter, see the "Installing the 3G Adapter for Extended Cable/Antenna" section on page 3-24. Otherwise, follow Step 7.

Table 3-2 3G Adapters and Supported SKUs

3G Adapter SKU	Description	SKUs Supported
3G-ACC-SMKTS9-TNC	3G adapter for extended cable/antenna with an SMK-TS-9 to TNC connector. Use this with the pentaband dipole indoor antenna (3G-ANTM-SMKTS9).	PCEX-3G-HSPA-R6, CISCO881G-G-K9
3G-ACC-SSMB-TNC	3G adapter for extended cable/antenna with an SSMB to TNC connector. Use this with the pentaband dipole indoor antenna shipped with your product.	PCEX-3G-HSPA, PCEX-3G-HSPA-A, PCEX-3G-CDMA-S, PCEX-3G-CDMA-V, PCEX-3G-CDMA-B, CISCO881G-A-K9, CISCO881G-S-K9, CISCO881G-V-K9

Step 7 Clean the flat surface to which you will affix the antenna.

Step 8 Remove the protective tape from the adhesive on the bottom of the antenna cradle, then firmly press the cradle to the flat surface.

Installing the 3G Adapter for Extended Cable/Antenna

For better signal and reception, if you are using the Cisco 3G Adapter for Extended Cable/Antenna, 3G-ACC-SMKTS9-TNC, follow these steps to install it:

Step 1 Locate and remove the Phillips screw on the left side of the router as shown in Figure 3-20. Keep the screw aside for Step 4.

Figure 3-20 Locating the Phillips Screw

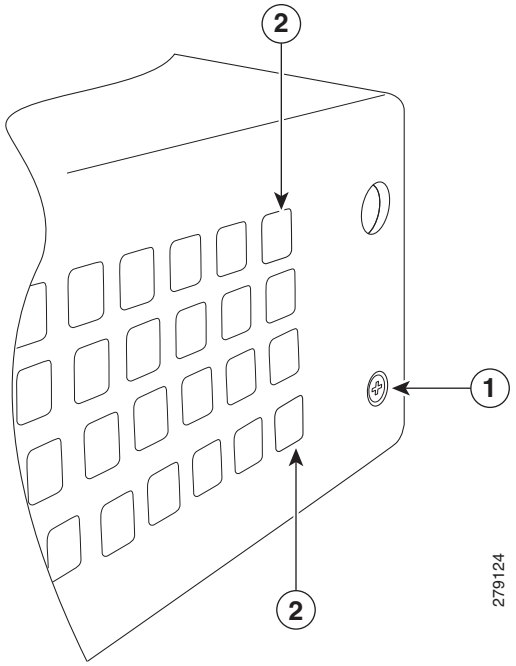

1	Phillips screw on the left side of router	**2**	Air vent holes to be aligned with adapter

Step 2 Locate the hooks on the adapter as shown in Figure 3-21.

Figure 3-21 Locating the Hooks on the Adapter

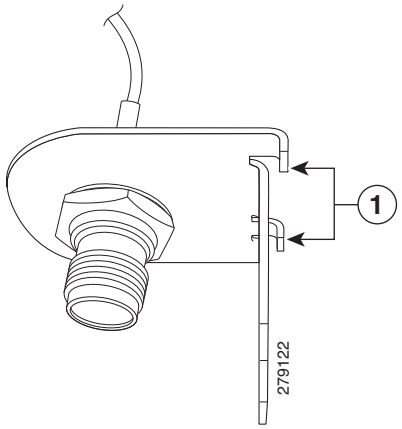

1	Hooks on the adapter

Step 3 Align and insert the hooks of the adapter into the air vent holes on the left side router body as shown in Figure 3-22.

Figure 3-22 Inserting the Hooks

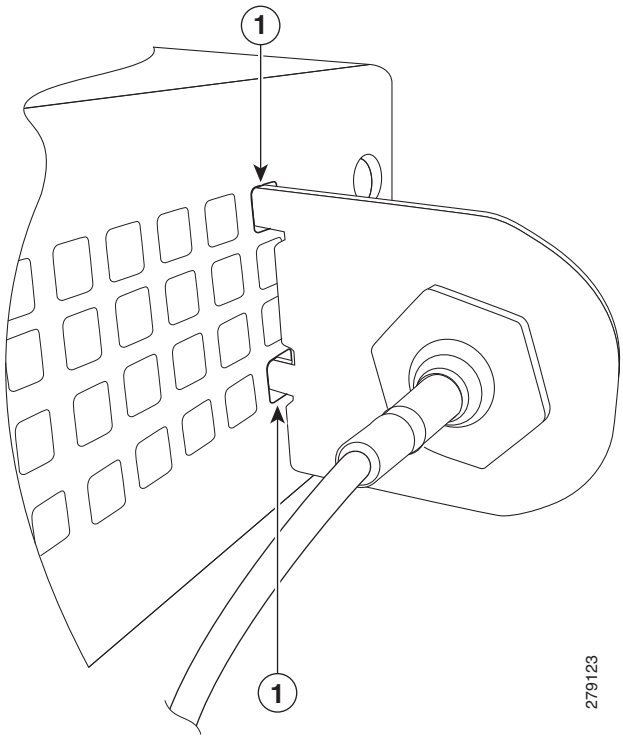

1	Hooks aligned and inserted into the router.

Step 4 Align the circular adapter hole with the hole on the router chassis from where you removed the screw in Step 1 and use the screw to attach the adapter to the router as shown in Figure 3-23.

Figure 3-23 Attaching the Adapter

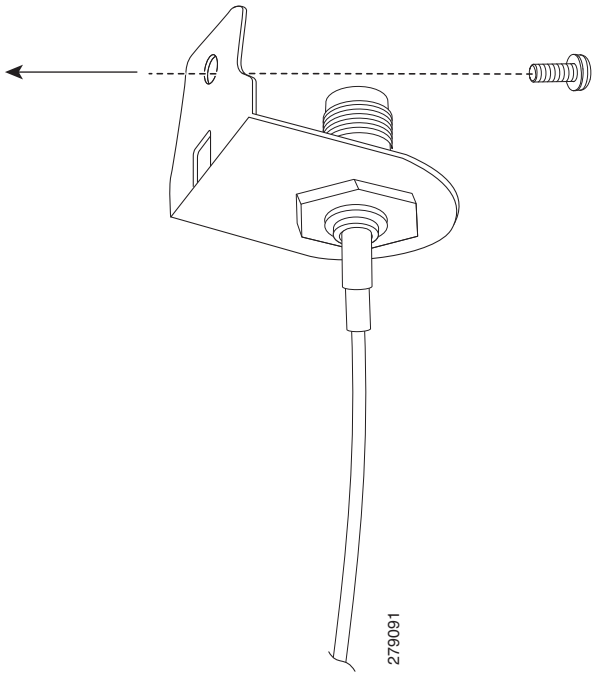

Step 5 Connect the extension cable to the 3G card, as described in the "Connecting the 3G Card" section on page 3-18. The complete assembly is shown in Figure 3-24.

Figure 3-24 Adapter Connected to 3G Card and Router Chassis

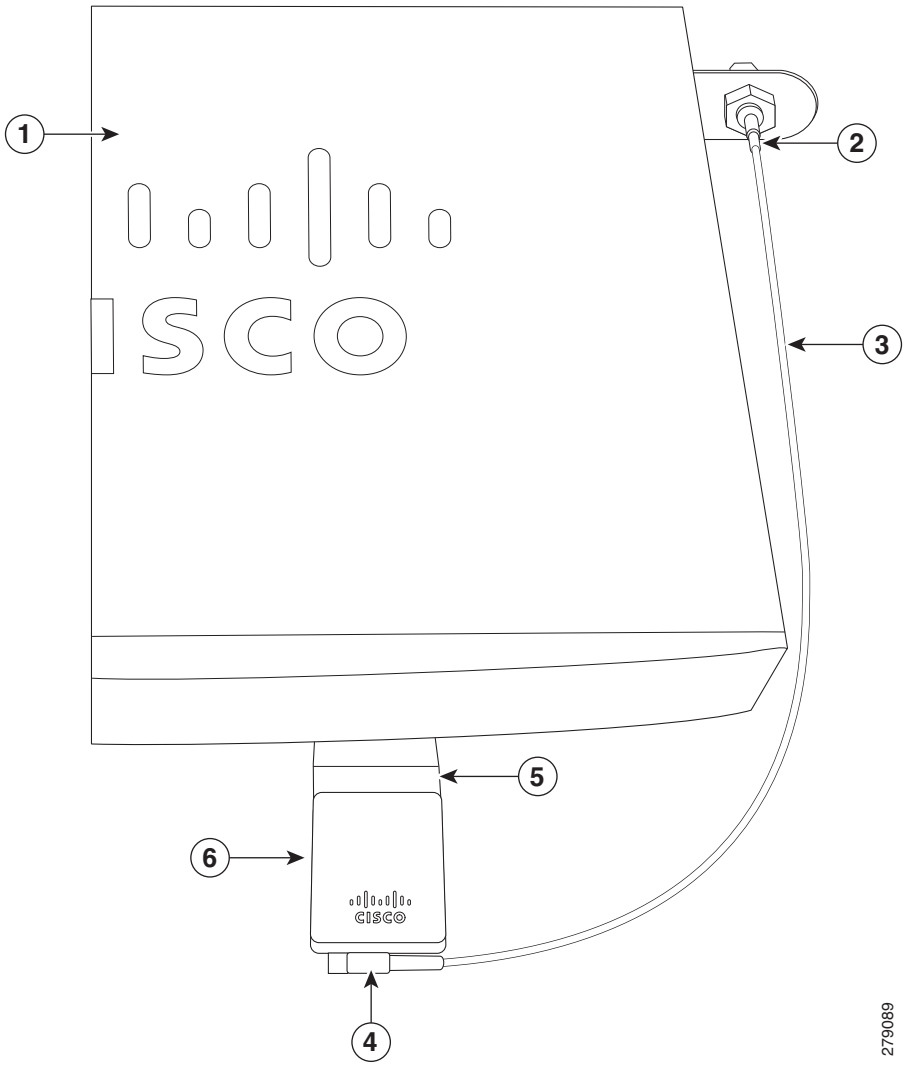

1	Router chassis	**4**	SSMB or SMK-TS-9 connector
2	3G adapter for extended cable/antenna	**5**	3G card inserted into the router
3	Cable	**6**	3G card

Now the adapter is ready for use with the extension cable.

Table 3-3 lists the loss information for the ultra-low-loss (ULL) LMR 400 cables available with the adapter for the 3G fixed platforms.

Table 3-3 Cisco Adapter Cables for Use with 3G Fixed Routers

Cisco Product Number	Antenna Adapter Length	Insertion Loss	Frequency (MHz)
3G-ACC-SSMB-TNC	14.5 inches	0.66 dB	2100
3G-ACC-TS9-TNC	13.5 inches	0.62 dB	2100

Note Antenna orientation can increase or decrease signal reception due to polarization. Typically, an SP's transmitting antenna on the BTS is a vertically polarized omnidirectional antenna, which means the electromagnetic waves are transmitted from it in a vertical plane. Hence, the receiving antenna needs to be vertically oriented too in order to receive the best signal. As the angle of the antenna orientation is changed from vertical to horizontal, only an angular component of the signal is picked up by the antenna. Therefore, if the antenna orientation is horizontal, the antenna picks up the least signal. The signal is received by the antenna as a result of it bouncing off of reflective surfaces. Hence, depending on where the antenna is placed, it may receive different signal strengths. However, the recommended position is *vertical*.

For additional information on all the available cables and antennas available for 3G, go to: http://www.cisco.com/en/US/docs/routers/access/1800/1861/software/feature/guide/mrwlsgsm.html#wp1262730

Connecting a Data BRI Port

You can connect the Data BRI port to the ISDN service provider as a backup link to the WAN port in case the primary xDSL (general term referring to various forms of DSL, including global industry standard symmetrical high-speed DSL [G.SHDSL]) WAN service fails. The Data BRI connection is not available on the third-generation (3G) models.

The cabling requirements for the ISDN S/T connection are as follows:

- You must provide two unshielded Category 5 cables. The first cable connects the NT1 box to the splitter, and the second cable connects the splitter to the wall jack.
- There are RJ-45 connectors at both ends of the default orange ISDN S/T cable. However, an RJ-45–to–RJ-11 ISDN S/T cable is available upon request if the wall jack at the site requires an RJ-11 connector. Contact your router reseller for the appropriate cable.

Caution Both LAN and WAN ports use RJ-45 connectors. Use caution when connecting cables to these connectors. To avoid damage to the router, do not connect telephone-network voltage (TNV) circuits (such as ISDN or DSL circuits) to safety extra-low voltage (SELV) circuits (such as LAN circuits).

To connect the Data BRI port to the ISDN service provider, follow these steps:

Note Although the following procedure shows a Cisco 888W data router, this procedure applies to all Cisco 880 series router with a Data BRI port.

Step 1 Connect one end of the orange ISDN S/T cable to the Data BRI port on the router. Figure 3-25 shows a Data BRI connection.

Figure 3-25 Connecting the Data BRI Port to the ISDN Line

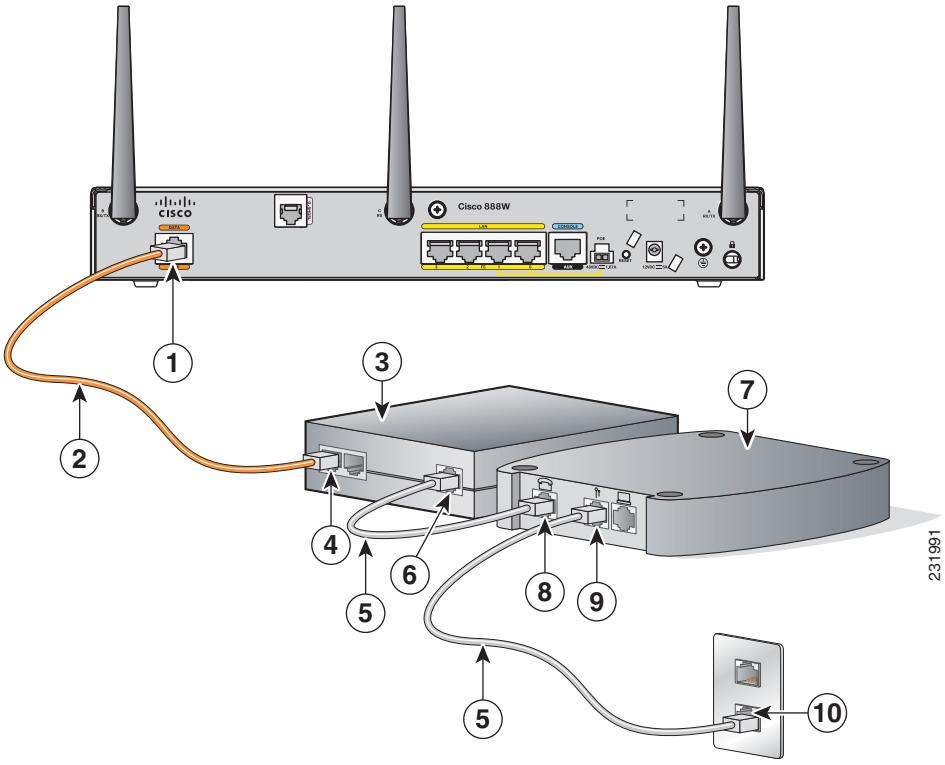

1	Data BRI port on the router	**6**	U-port on the NT1 box
2	ISDN S/T cable	**7**	xDSL splitter (provided by the xDSL service provider)
3	Network termination 1 (NT1) box	**8**	Telephone line port on the splitter
4	S/T port on the NT1 box	**9**	Telecommunication service port on the splitter
5	Unshielded CAT 5 cable	**10**	Wall jack

Step 2 Connect the other end of the orange ISDN S/T cable to the S/T port on the NT1 box.

Step 3 Connect the first unshielded CAT 5 cable from the U-port on the NT1 box to the telephone line port on the splitter.

Step 4 Connect the second unshielded Category 5 cable from the telecommunication service port on the splitter to the wall jack to allow a link to the network service provider.

Connecting an FE Line to an FE WAN Port

To connect the Fast Ethernet (FE) WAN port on the router, follow these steps:

Step 1 Connect one end of the yellow cable to the FE WAN port as shown in Figure 3-26.

Figure 3-26 Connecting the FE WAN Port

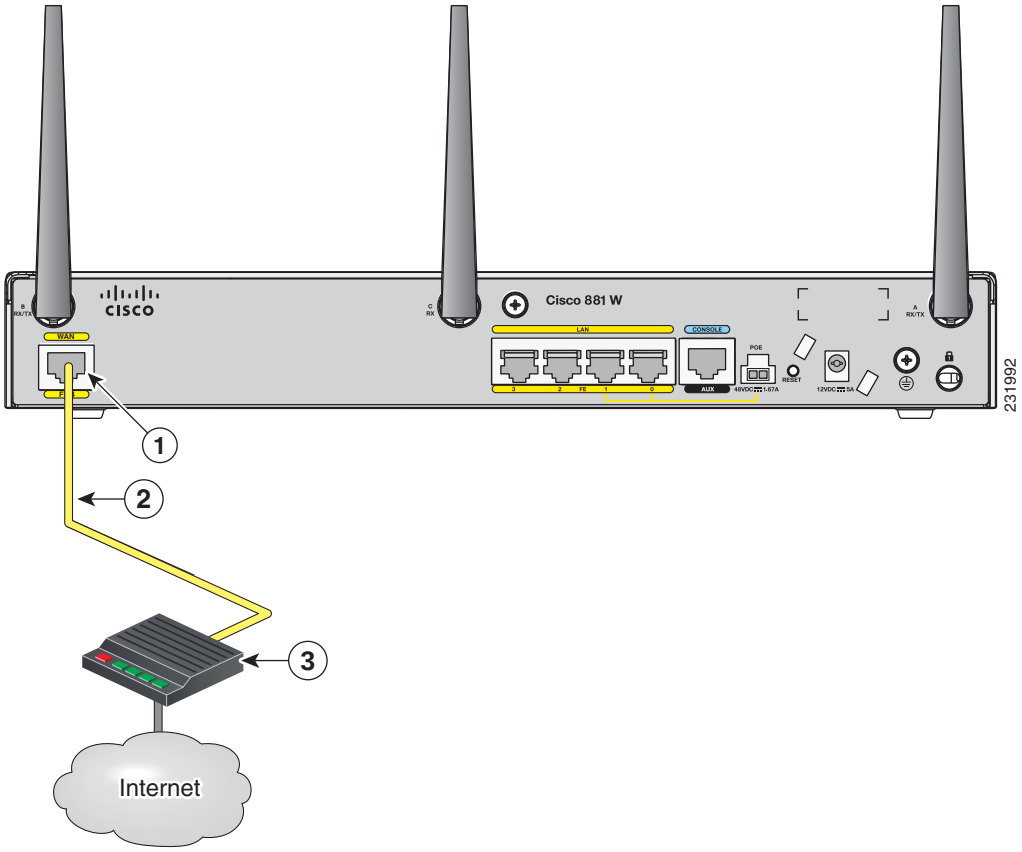

1	FE WAN port	**3**	Modem connected to the Internet
2	CAT 5 cable		

Step 2 Connect the other end of cable to an available port on the modem.

Connecting a GE Line to an GE WAN Port

To connect the Gigabit Ethernet (GE) WAN port on the router, follow these steps:

Step 1 Connect one end of the yellow cable to the GE WAN port as shown in Figure 3-27.

Figure 3-27 Connecting the GE WAN Port

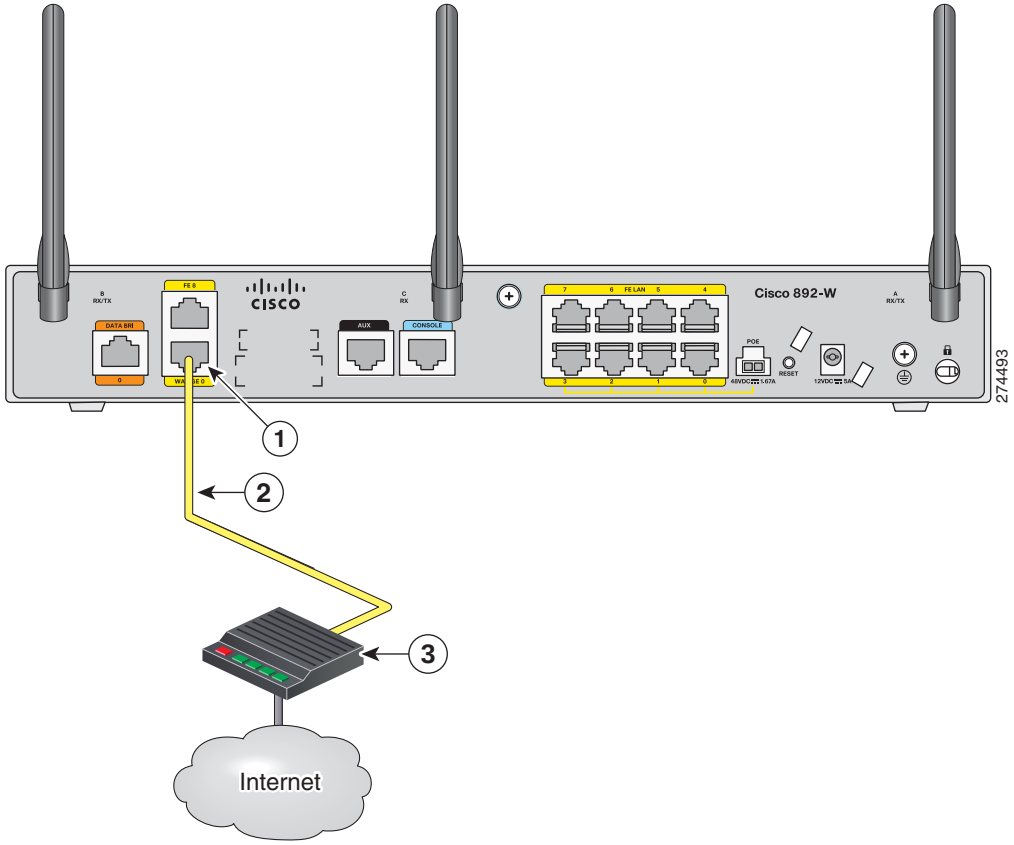

1	GE WAN port	**3**	Modem connected to the Internet
2	CAT 5 cable		

Step 2 Connect the other end of cable to an available port on the modem.

Connecting an xDSL Line

Warning **Hazardous network voltages are present in WAN ports regardless of whether power to the unit is OFF or ON. To avoid electric shock, use caution when working near WAN ports. When detaching cables, detach the end away from the unit first.** Statement 1026

Caution Cisco Systems DSL WAN Interfaces are tested for compliance with regulatory standards such as FCC Part 68, ITU-T K.21, IEC 61000-4-5, and CSA/EN/IEC/UL 60950-1. These standards assume Primary Protection devices protect the Customer Premise Equipment (CPE). These devices are normally installed by the service provider, local exchange carrier or qualified service person and are located at the telecom service provider entrance, network interface box, or demarcation point. See Figure 3-28 for the likely location of the primary protection device. The primary protection device must be suitable for the xDSL interface employed. Please contact your sales team or qualified service person for further information and installation.

Caution To reduce the risk of fire, use only No. 26 AWG or larger (e.g., 24 AWG) UL Listed or CSA Certified Telecommunication Line Cord.

Warning **Do not use this product near water; for example, near a bath tub, wash bowl, kitchen sink or laundry tub, in a wet basement, or near a swimming pool.** Statement 1035

Warning **Avoid using a telephone (other than a cordless type) during an electrical storm. There may be a remote risk of electric shock from lightning.** Statement 1038

Warning **To report a gas leak, do not use a telephone in the vicinity of the leak.** Statement 1039

Warning **There is the danger of explosion if the battery is replaced incorrectly. Replace the battery only with the same or equivalent type recommended by the manufacturer. Dispose of used batteries according to the manufacturer's instructions.** Statement 1015

Figure 3-28 Primary Protection Device Location

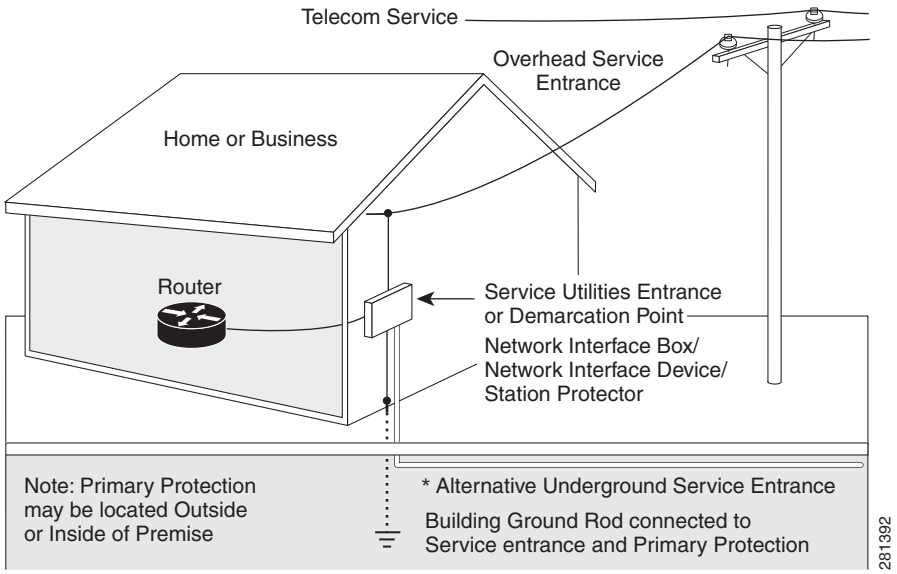

To connect the router to a global industry standard symmetrical high-speed DSL (G.SHDSL) line, very-high-speed digital subscriber line 2 (VDSL2) port, or an ADSL2+ line, follow these steps:

Step 1 Connect one end of an RJ-11 (RJ-45 on 880 E models) cable to the port on the router. See Figure 3-29.

Figure 3-29 Connecting the xDSL Line

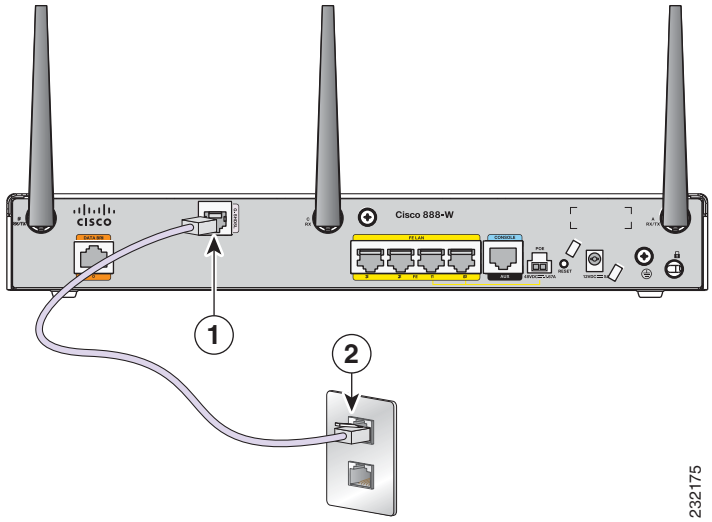

1	G.SHDSL port, VDSL2oPOTs port, or ADSL2+ port	**2**	DSL wall jack

Step 2 Connect the other end of the cable to the DSL wall jack.

Caution The primary WAN port is designed for an RJ-45 connector only. Damage to the primary WAN port may occur if a non-RJ-45 connector is inserted.

Note The DSL line must be provisioned by your service provider and correctly configured so that the LED shows the carrier detect (CD) status. On Cisco 860VAE routers, check the DSL Link LED.

Connecting Power over Ethernet

Warning **This unit might have more than one power supply connection. All connections must be removed to de-energize the unit.** Statement 1028

Warning **This product must be connected to a power-over-ethernet (PoE) IEEE 802.3af compliant power source or an IEC60950 compliant limited power source.** Statement 353

Figure 3-30 shows how to connect the 48-VDC Power over Ethernet (PoE) power adapter to your router. The PoE adapter provides power to ports 0 and 1 of the 4-port 10/100 FE switch on the Cisco 880 series routers and ports 0,1, 2, and 3 of the 8-port 10/100 FE switch on the Cisco 890 series routers.

Note The router must also be connected to an AC power outlet through a 12-VDC adapter. To connect the router to an AC outlet, see the"Connecting the AC Adapter" section on page 3-5.

Note Be sure that the internal PoE is enabled for this connection procedure to work.

Figure 3-30 Connecting PoE for the Cisco 880 and the Cisco 890 Series Routers

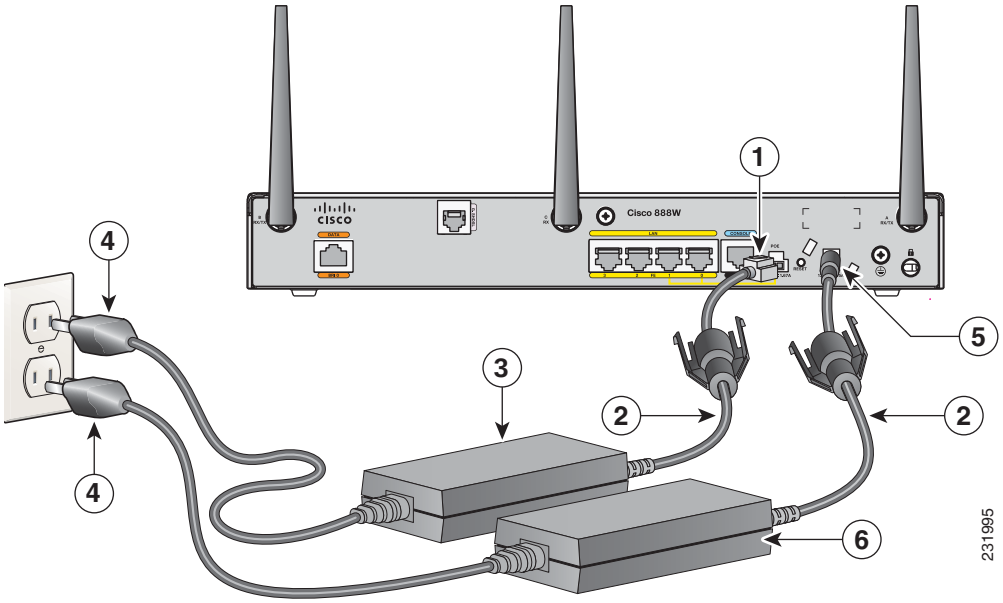

1	48-VDC PoE input jack	**4**	AC plug
2	Power cord	**5**	12-VDC input power-jack plug
3	Power adapter—48 VDC	**6**	Power adapter—12 VDC

The Cisco 880 series ISRs with embedded WLAN antennas require a single external power supply: a 30-W power supply for non-POE-enabled routers or a 60-W power supply for POE-enabled routers. For the back panels of some of these routers, see Figure 1-33 and Figure 1-35.

Connecting the AC Adapter

Warning **The device is designed to work with TN power systems.** Statement 19

Warning **This product relies on the building's installation for short-circuit (overcurrent) protection. Ensure that the protective device is rated not greater than:**
120 VAC, 20 A U.S. (240 VAC, 16 to 20 A international). Statement 1005

Warning **This unit might have more than one power supply connection. All connections must be removed to de-energize the unit.** Statement 1028

Note The Cisco 892FSP utilizes a single 4-pin power connector type. Figure 3-33 shows the pin number assignment of the Cisco 892FSP Power Adapter Connector.

To connect your Cisco 860 series, Cisco 880 series, or the Cisco 890FSP ISR to an AC power outlet, follow these steps:

Step 1 Connect the router to an AC power outlet as shown in Figure 3-31.
To connect the AC power outlet for the Cisco 892FSP router, see Figure 3-32.

Figure 3-31 Connecting the AC Adapter

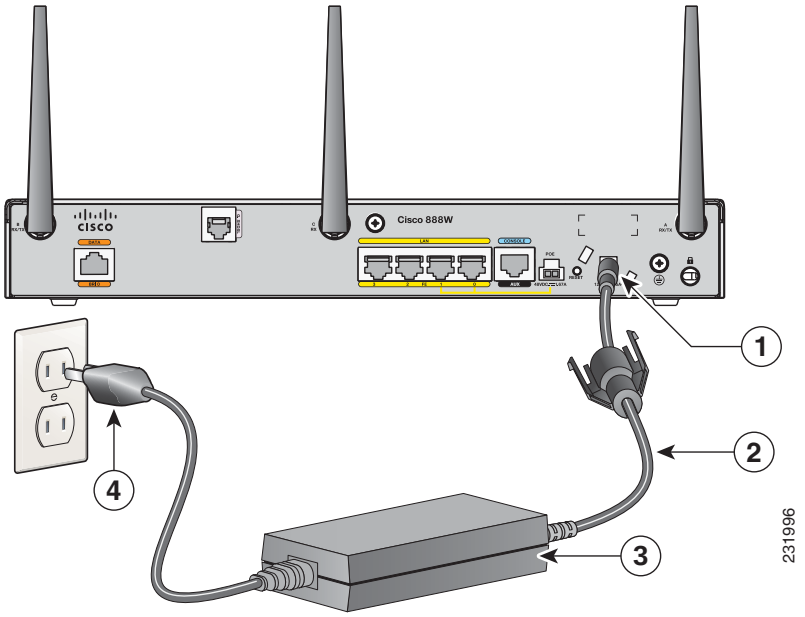

1	12-VDC plug	**3**	Power adapter—12 VDC
2	Power cord	**4**	AC plug

Figure 3-32 Connecting the AC Adapter for the Cisco 892FSP

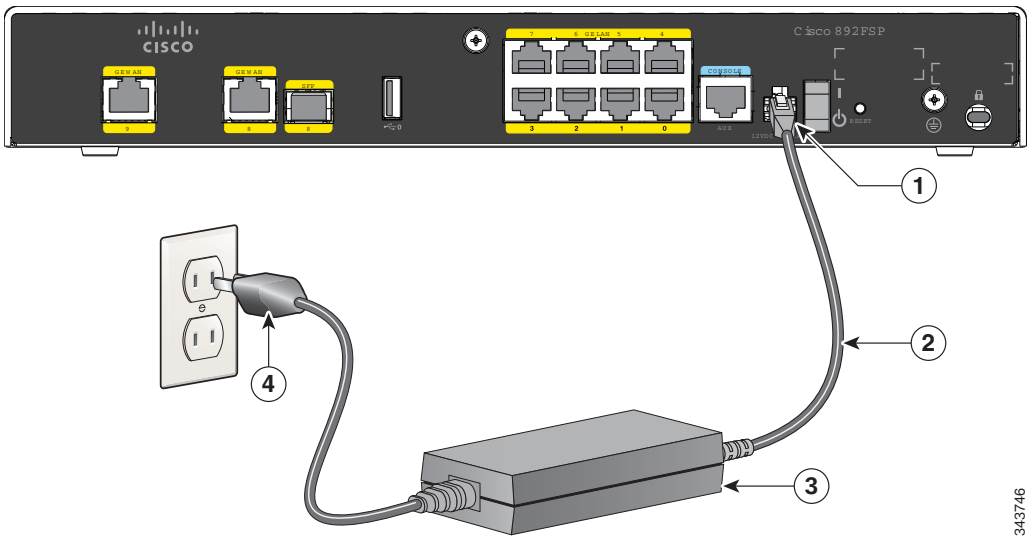

1	12-VDC plug	**3**	Power adapter—12 VDC
2	Power Adapter Cord	**4**	AC Plug

Figure 3-33 Cisco 892FSP, 896VA, 897VA, and 898EA Power Adapter Connector Pin Assignment

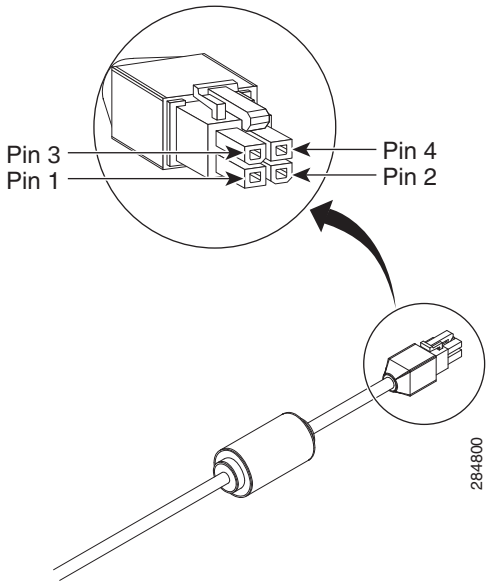

Pin 1	Ground	**Pin 3**	+12 V
Pin 2	NC[1]	**Pin 4**	NC

1. NC = No Connection.

Step 2 To secure the power cord to the router, attach the power lock clip to the power cord, slide the clip to the end of the DC plug, and secure the retaining clip into the router chassis. See Figure 3-34.

Figure 3-34 Securing the Power Cord

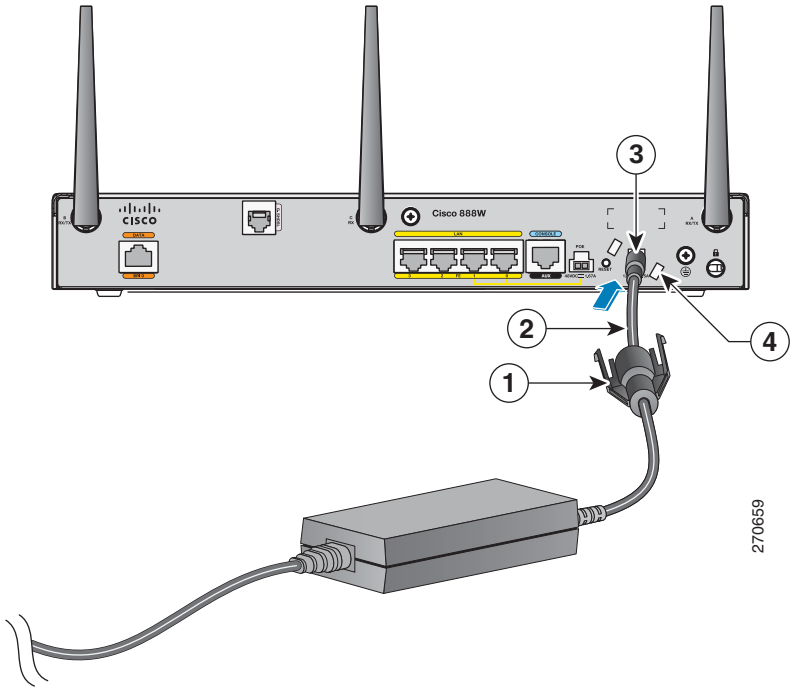

1	Power lock clip	**3**	DC plug
2	Power cord	**4**	Lock holes on either side of the power connector

Step 3 Snap the latches into the holes on either side of the power connector. See Figure 3-35.

Figure 3-35 Power Lock Clip Latched Into the Holes on Either Side of the Power Connector

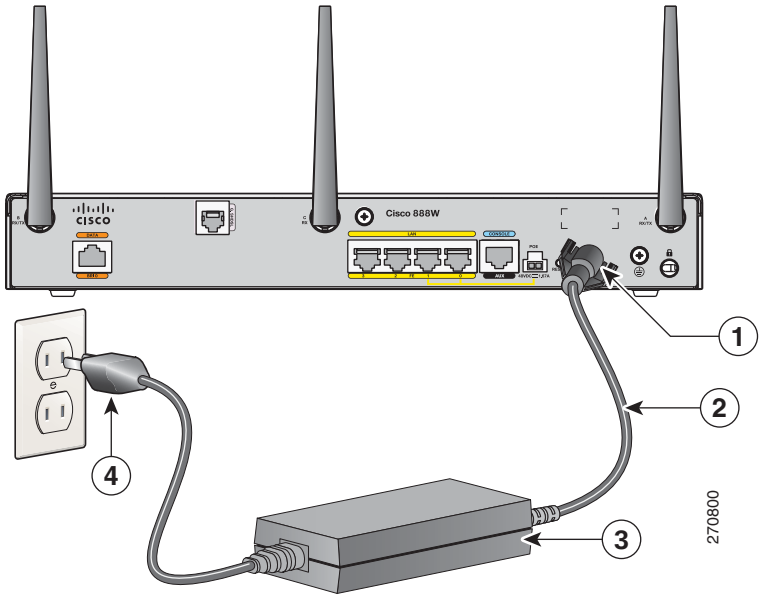

1	Power lock clip	**3**	Power adapter
2	Power cord	**4**	AC plug

Connecting an FXS Line

Use a standard straight-through RJ-11 modular telephone cable to connect a Foreign Exchange Service (FXS) port to a telephone or fax machine.

Warning **This equipment contains a ring signal generator (ringer), which is a source of hazardous voltage. Do not touch the RJ-11 (phone) port wires (conductors), the conductors of a cable connected to the RJ-11 port, or the associated circuit-board when the ringer is active. The ringer is activated by an incoming call.** Statement 1042

Warning **Hazardous network voltages are present in WAN ports regardless of whether power to the unit is OFF or ON. To avoid electric shock, use caution when working near WAN ports. When detaching cables, detach the end away from the unit first.** Statement 1026

Warning **For connections outside the building where the equipment is installed, the following ports must be connected through an approved network termination unit with integral circuit protection: FXS.** Statement 1044

To connect the FXS line, follow these steps:

Step 1 Connect one end of the straight-through RJ-11 cable to the FXS port. Figure 3-36 shows an FXS line connection.

Figure 3-36 Connecting an FXS Line

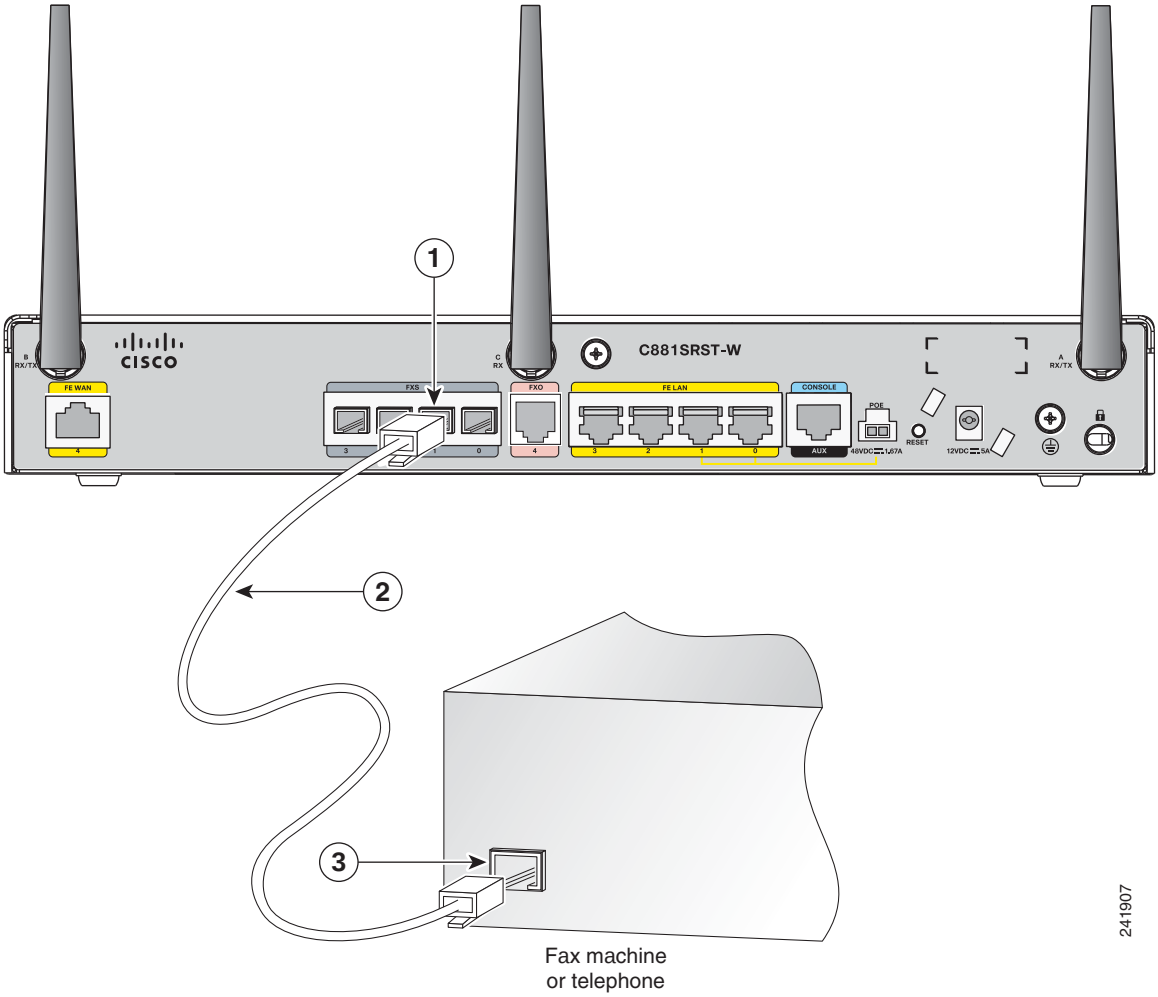

1	FXS port	**3**	RJ-11 port
2	RJ-11 cable		

Step 2 Connect the other end of the cable to the RJ-11 port on the fax machine or telephone.

Connecting an FXO Line

Use a straight-through RJ-11 cable to connect the FXO voice port to the PSTN or PBX through a telephone wall outlet.

Warning **Hazardous network voltages are present in WAN ports regardless of whether power to the unit is OFF or ON. To avoid electric shock, use caution when working near WAN ports. When detaching cables, detach the end away from the unit first.** Statement 1026

To connect the FXO line, follow these steps:

Step 1 Connect one end of the straight-through RJ-11 cable to the FXO port. See Figure 3-37.

Figure 3-37 Connecting an FXO Line

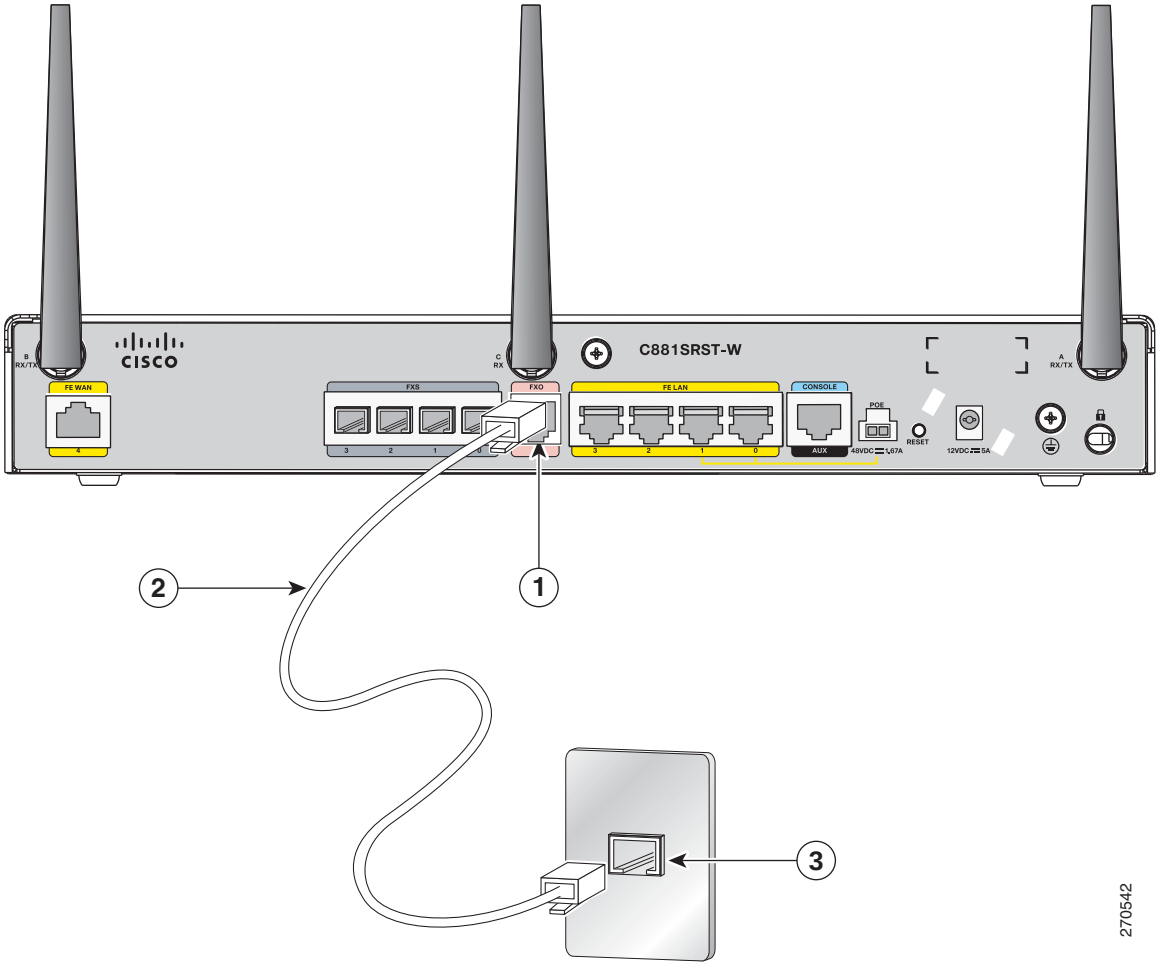

1	FXO port	**3**	Telephone outlet
2	RJ-11 cable		

Step 2 Connect the other end of the RJ-11 cable to a telephone wall outlet.

Note If you have specified the use of a private line automatic ringdown (PLAR) off-premises extension (OPX) connection mode for an FXO voice port (with loop resistance less than 8000 Ohm), you must ensure that the soft-offhook option is enabled on the port.

This option allows a stepped offhook resistance during seizure, which avoids overloading the circuit during offhook in the event that ringing voltage is present on the circuit at the same time as the trunk seizure. The stepped offhook resistance is initially set to 800 Ohms, then adjusts to 50 Ohms when ringing voltage is not present.

To enable the **soft-offhook** command on the port, and to access the **connection** command with plar opx syntax, see the Cisco Command Lookup Tool.

Connecting a Voice ISDN BRI Line

Use a straight-through RJ-45 cable to connect the voice BRI port to the ISDN network through a telephone outlet or other device.

Caution To prevent damage to the router, be sure to connect the BRI cable to the BRI connector only and not to any other RJ-45 connector.

To connect the voice BRI line, follow these steps:

Step 1 Connect one end of a straight-through RJ-45–to–RJ-45 cable to the Voice BRI port.

Note When the interface is configured as NT and is connecting to a TE device, use a crossover cable. See Table A-27.

Figure 3-38 shows a voice BRI line connection.

Figure 3-38 Connecting a Voice BRI Line

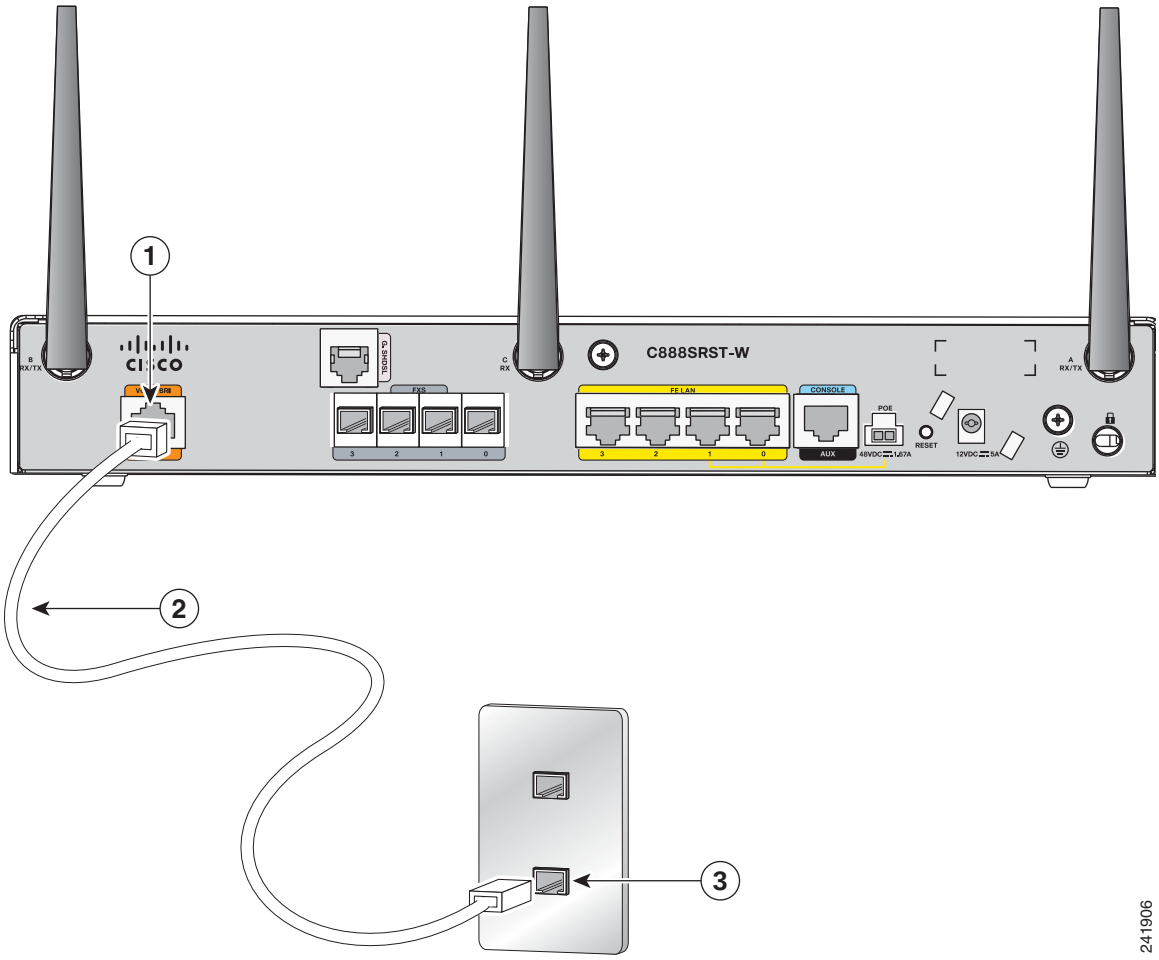

1	Voice BRI port	**3**	Telephone outlet
2	RJ-45 cable		

Step 2 Connect the other end of the cable to the RJ-45 telephone outlet or other device.

Warning **Invisible laser radiation may be emitted from disconnected fibers or connectors. Do not stare into beams or view directly with optical instruments.** Statement 1051

Warning **Do not stare into the laser beam.** Statement 1010

Warning **Invisible laser radiation present.** Statement 1016

Warning **Ultimate disposal of this product should be handled according to all national laws and regulations.** Statement 1040

Warning **Invisible laser radiation may be emitted from the end of the unterminated fiber cable or connector. Do not view directly with optical instruments. Viewing the laser output with certain optical instruments (for example, eye loupes, magnifiers, and microscopes) within a distance of 100 mm may pose an eye hazard.** Statement 1056

Warning **Use of controls, adjustments, or performing procedures other than those specified may result in hazardous radiation exposure.** Statement 1057

Warning **Invisible laser radiation may be emitted from disconnected fibers or connectors. Do not stare into beams or view directly with optical instruments.** Statement 1051

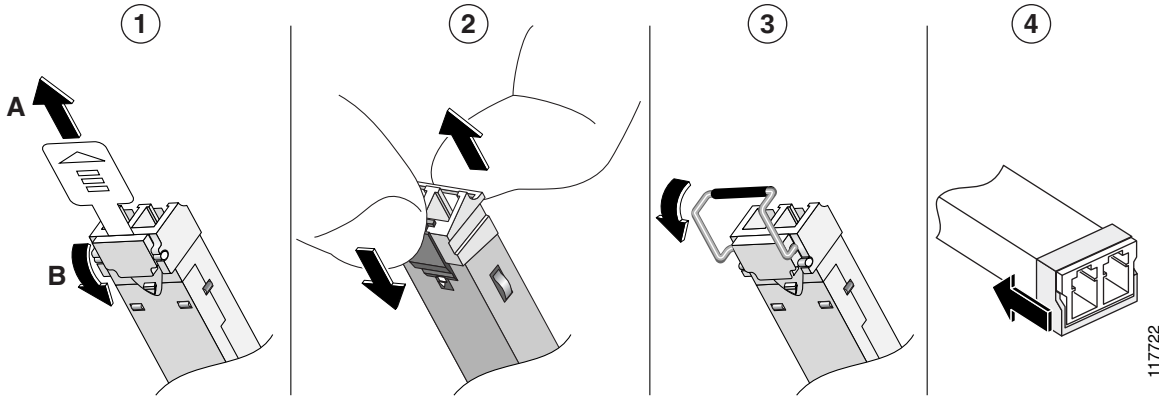

1	Sliding latch	**3**	Bale-clasp latch
2	Swing and slide latch	**4**	Plastic collar latch

Verifying Connections

To verify that all devices are properly connected to the router, first turn on all the connected devices, then check the LEDs. To verify router operation, refer to Table 3-1.

For the full LED descriptions, see the "LEDs" section on page 1-135.

Table 3-4 Verifying the Router Operation

Power and Link	LEDs to Check	Normal Patterns
Power	OK	On when power is supplied to the router.
To servers, PCs, workstations, or an external Ethernet switch connected to the LAN ports (FE0[1], FE1, FE2, or FE3)	LAN 0, LAN 1, LAN 2, or LAN 3	On when the FE LAN port is physically connected to a server, PC, workstation, or external Ethernet switch.
To FE WAN line	WAN FE4	On when the WAN Ethernet carrier has detected status. Blinks when receiving or transmitting data.
To xDSL[2] line	xDSL CD	Green when the line is connected to the xDSL DSLAM[3].
	xDSL Data	Green when receiving or sending data. Blinks when line is in training mode.
ATM	898EA only	Green when ATM mode is selected.
EFM	898EA only	Green when EFM mode is selected.
To ISDN line	Data BRI LNK	Green when the ISDN line is connected.
	Data BRI B1 and B2	Green when the channel is connected.
3G[4]	WWAN[5]	Green when service is established. Slow blinking when searching for service.
	RSSI[6]	Amber when service is not established. Green when signal strength is high. Off or slow blinking when signal strength is low. Fast blinking when signal strength is medium.
	CDMA[7]	Green when service is established.
	GSM[8]	Green when service is established.
To PPP[9] clients	PPP	Green when either a PPPoE[10] or PPPoA[11] client is running.
To VPN[12] tunnel	VPN	Green when a crypto session is running.

Table 3-4 Verifying the Router Operation (continued)

Power and Link	LEDs to Check	Normal Patterns
To wireless LAN	WLAN LINK	Wireless LAN link status: • Green if at least one client is associated. • Off if no client is associated.
	WLAN 2.4 GHz	Wireless LAN 2.4-GHz status: • Green when radio is connected, SSID[13] is configured, signal is being transmitted, and client is associated. • Slow blinking when radio is connected, SSID is configured, and signal is being transmitted.
	WLAN 5.0 GHz	Wireless LAN 5.0-GHz status: • Green when radio is connected, SSID is configured, signal is being transmitted, and client is associated. • Slow blinking when radio is connected, SSID is configured, and signal is being transmitted.
PoE[14]	PoE 0 (880 and 890 series only)	PoE power status: • Green when connected and powered. • Amber when there is a fault with the inline power supply.
	PoE 1 (880 and 890 series only)	
	PoE 2 (890 series only)	
	PoE 3 (890 series only)	
To LAN GE/FE line (860VAE models only)	LAN	Blinking when there is LAN activity (traffic in either direction). Off when the link is down.
To DSL line (860VAE models only)	DSL LINK	On when DSL WAN mode is selected and DSL training complete. Blinking when DSL WAN mode is selected but incomplete DSL LinkUp state such as in-training (slow initially, fast when almost connected), or controller "OFF", or no cable attached to DSL connector. Off when the device is powered off; or GE WAN mode is selected.
	DSL ACT	On when the DSL interface is up. Blinking when there is DSL WAN activity (traffic in either direction). Faster blinking when there is heavier traffic. Off when the device is powered off or the DSL WAN interface is down.

Table 3-4 Verifying the Router Operation (continued)

Power and Link	LEDs to Check	Normal Patterns
To WAN GE line (860VAE models only)	GE Mode	On when GE WAN mode is selected. Off when the device is powered off or when DSL WAN mode is selected.
	GE ACT	On when the GE WAN interface is up. Blinking when there is GE WAN activity (traffic in either direction). Off when the device is powered off or when the GE WAN interface is down.

1. FE = Fast Ethernet.
2. xDSL = General term referring to various forms of DSL, including ADSL (asymmetric digital subscriber line), VDSL (very-high-data-rate digital subscriber line), and G.SHDSL.
3. DSLAM = digital subscriber line access multiplexer.
4. 3G = Third-Generation.
5. WWAN = wireless WAN.
6. RSSI = Received Signal Strength Indicator.
7. CDMA = code division multiple access.
8. GSM = Global System for Mobile Communications.
9. PPP = Point-to-Point Protocol.
10. PPPoE = PPP over Ethernet.
11. PPPoA = PPP over ATM.
12. VPN = Virtual Private Network.
13. SSID = service set identifier.
14. PoE = Power over Ethernet.

Initial Configuration

This chapter provides instructions for initial configuration of the Cisco 819, 860, 880, 890 Series Integrated Services Routers (ISRs), and contains the following sections:

- Cisco 810 Series, page 4-1
- Cisco 860, 880, 890 Series, page 4-2

Cisco 810 Series

Cisco 819 Series

This section provides instructions for initial configuration of the Cisco 819 ISRs. For the initial configuration, we recommend using Cisco Configuration Professional Express. For instructions on how to use Cisco Configuration Professional Express to configure the router, see *Cisco Configuration Professional Express User's Guide*.

You may also initially configure your router by using the Cisco IOS command-line interface (CLI) or by using the setup command facility. To create the initial configuration, the setup command facility prompts you for basic information about your router and network.

This section contains the following topics:

- Cisco IOS CLI, page 4-1
- Setup Command Facility, page 4-1
- Verifying the Initial Configuration, page 4-2

Cisco IOS CLI

To configure the initial router settings by using the Cisco IOS CLI, you must set up a console connection. To configure the initial router settings using the Cisco IOS CLI, refer to the Cisco IOS CLI, page 4-2.

For instructions on how to set up a console connection, see the "Connecting a Terminal or PC to the Console Port" section on page 3-16.

Setup Command Facility

For more information, refer to the "Setup Command Facility" section on page 4-4.

Verifying the Initial Configuration

For more information, refer to the "Verifying the Initial Configuration" section on page 4-6.

Cisco 860, 880, 890 Series

This section provides instructions for initial configuration of the Cisco 860 series, 880 series, and 890 series ISRs. You may also initially configure your router by using the Cisco IOS command-line interface (CLI) or by using the setup command facility. To create the initial configuration, the setup command facility prompts you for basic information about your router and network.

This section contains the following topics:

- Cisco Configuration Professional Express, page 4-2
- Cisco IOS CLI, page 4-2
- Setup Command Facility, page 4-4
- Verifying the Initial Configuration, page 4-6
- Initial Configuration of the Wireless Access Point, page 4-7

Note Some SKUs may not include a default configuration file. If your router does not have a default configuration file, go to the "Setup Command Facility" section on page 1 to configure the initial router settings.

Cisco Configuration Professional Express

After you connect the cables and power up the router, we recommend that you use the Cisco Configuration Professional Express web-based application to configure the initial router settings.

For instructions on how to use Cisco Configuration Professional Express to configure the router, see *Cisco Configuration Professional Express User's Guide*.

Cisco IOS CLI

To configure the initial router settings by using the Cisco IOS CLI, you must set up a console connection. For instructions on how to set up a console connection, see the "Connecting a Terminal or PC to the Console Port" section on page 3-16.

To configure the initial router settings using the Cisco IOS CLI, follow these steps:

Step 1 Set up a console connection to your router. The following message is displayed:

```
...
router con0 is now available
```

Step 2 Press **Return**. The following message is displayed:

```
Cisco Configuration Professional Express (Cisco CP Express) is installed on this device.
This feature requires the one-time use of the username "username1"
with the password "password1." The default username and password have a privilege level of
15.
```

```
Please change these publicly known initial credentials using Cisco CP Express or the Cisco
IOS CLI.

Here are the Cisco IOS commands.

username <myuser>  privilege 15 secret 0 <mypassword>
no username username1

Replace <myuser> and <mypassword> with the username and password you want to use.

For more information about Cisco CP please follow the instructions in the QUICK START
GUIDE for your router...
...
User Access Verification
Username:
```

Step 3 Enter the username **username1,** and press **Return** or **Enter**. The following prompt is displayed:

```
Password:
```

Step 4 Enter the password **password1,** and press **Return** or **Enter**. The following prompt is displayed:

```
Router#
```

A message is displayed that is similar to the first warning message. The message directs you to change the username and password.

You are now in privileged EXEC mode.

Note You must change the username and password before you log off the router. You cannot use the username **username1** or password **password1** after you log off from this session.

Step 5 Enter configuration mode using the following commands.

```
Router#
Router#config t
Router(config)#
Router(config)#username username privilege 15 secret 0 password
```

Step 6 To change the username and password, enter the following at the prompt:

username *username* **privilege 15 secret 0** *password*

The *username* and *password* are the username and password that you determine.

To continue using the Cisco IOS CLI for initial configuration, see the applicable configuration procedures in *Cisco 860 Series, Cisco 880 Series, and Cisco 890 Series Integrated Services Routers Software Configuration Guide*.

Note Save your configuration changes regularly to avoid losing them during resets, power cycles, or power outages. Use the **copy running-config startup-config** command at the privileged EXEC mode prompt (Router#) to save the configuration to NVRAM.

Step 7 Verify the initial configuration. See the "Verifying the Initial Configuration" section on page 4-2.

Setup Command Facility

The setup command facility guides you through the configuration process by prompting you for the specific information that is needed to configure your system. Use the setup command facility to configure a hostname for the router, to set passwords, and to configure an interface for communication with the management network.

To use the setup command facility, you must set up a console connection with the router and enter the privileged EXEC mode.

Note For instructions on how to set up a console connection, see the "Connecting a Terminal or PC to the Console Port" section on page 3-16.

To configure the initial router settings by using the setup command facility, follow these steps:

Step 1 Set up a console connection to your router, and enter privileged EXEC mode. For instructions on how to enter privileged EXEC mode, see Step 1 through Step 4 in the "Cisco IOS CLI" section on page 4-1.

Step 2 In privileged EXEC mode, at the prompt, enter **setup**.

```
yourname# setup
```

The following message is displayed:

```
--- System Configuration Dialog ---

Continue with configuration dialog? [yes/no]:
```

You are now in the setup command facility.

The prompts in the setup command facility vary, depending on your router model, on the installed interface modules, and on the software image. The following steps and the user entries (in **bold**) are shown as examples only.

Note If you make a mistake while using the setup command facility, you can exit and run the setup command facility again. Press **Ctrl-C**, and enter the **setup** command at the privileged EXEC mode prompt (Router#). For more information on using the setup command facility, see "The Setup Command" chapter in *Cisco IOS Configuration Fundamentals Command Reference, Release 12.2T*.

Step 3 To proceed using the setup command facility, enter **yes.**

```
Continue with configuration dialog? [yes/no]: yes
```

Step 4 When the following messages appear, enter **yes** to enter basic management setup.

```
At any point you may enter a question mark '?' for help.
Use ctrl-c to abort configuration dialog at any prompt.

Default settings are in square brackets '[]'.

Basic management setup configures only enough connectivity
for management of the system, extended setup will ask you
to configure each interface on the system

Would you like to enter basic management setup? [yes/no]: yes
```

Step 5 Enter a hostname for the router (this example uses Router).

```
Configuring global parameters:
Enter host name [Router]: Router
```

Step 6 Enter an enable secret password. This password is encrypted (more secure) and cannot be seen when viewing the configuration.

```
The enable secret is a password used to protect access to
privileged EXEC and configuration modes. This password, after
entered, becomes encrypted in the configuration.
Enter enable secret: xxxxxx
```

Step 7 Enter an enable password that is different from the enable secret password. This password is *not* encrypted (less secure) and can be seen when viewing the configuration.

```
The enable password is used when you do not specify an
enable secret password, with some older software versions, and
some boot images.
Enter enable password: xxxxxx
```

Step 8 Enter the virtual terminal password, which prevents unauthenticated access to the router through ports other than the console port.

```
The virtual terminal password is used to protect
access to the router over a network interface.
Enter virtual terminal password: xxxxxx
```

Step 9 Respond to the following prompts as appropriate for your network.

```
Configure SNMP Network Management? [yes]:
    Community string [public]:
```

A summary of the available interfaces is displayed.

Step 10 Choose one of the available interfaces for connecting the router to the management network.

```
Enter interface name used to connect to the
management network from the above interface summary: fastethernet4
```

Step 11 Respond to the following prompts as appropriate for your network.

```
Configuring interface FastEthernet4:
Use the 100 Base-TX (RJ-45) connector? [yes]: yes
Operate in full-duplex mode? [no]: yes
Configure IP on this interface? [yes]: yes
    IP address for this interface: 172.1.2.3
    Subnet mask for this interface [255.255.0.0] : 255.255.0.0
    Class B network is 172.1.0.0, 26 subnet bits; mask is /16
```

The configuration is displayed:

```
The following configuration command script was created:

hostname Router
enable secret 5 $1$D5P6$PYx41/lQIASK.HcSbfO5q1
enable password xxxxxx
line vty 0 4
password xxxxxx
snmp-server community public
!
no ip routing
!
interface FastEthernet4
no shutdown
speed 100
duplex auto
ip address 172.1.2.3 255.255.0.0
!
```

Step 12 Respond to the following prompts. Enter **2** to save the initial configuration.

```
[0] Go to the IOS command prompt without saving this config.
[1] Return back to the setup without saving this config.
[2] Save this configuration to nvram and exit.

Enter your selection [2]: 2
Building configuration...
Use the enabled mode 'configure' command to modify this configuration.

Press RETURN to get started! RETURN

The user prompt is displayed.
Router>
```

Step 13 Verify the initial configuration. See the "Verifying the Initial Configuration" section on page 4-2 for verification procedures.

After the initial configuration file is created, you can use the Cisco IOS CLI to perform additional configuration.

Verifying the Initial Configuration

To verify that the new interfaces are operating correctly, perform the following tests:

- To verify that the interfaces and line protocol are in the correct state—up or down—enter the **show interfaces** command.
- To display a summary status of the interfaces configured for IP, enter the **show ip interface brief** command.
- To verify that you configured the correct hostname and password, enter the **show configuration** command.

After you complete and verify the initial configuration, you can configure your Cisco router for specific functions.

Initial Configuration of the Wireless Access Point

The embedded wireless access point (AP) runs its own IOS. You can initially configure the embedded wireless AP by using one of the following methods:

- Cisco Configuration Professional Express
- Setup command facility on the embedded wireless device

For information on how to do basic wireless configuration on your router see the "Basic Wireless Device" chapter of the *Cisco 860 Series, Cisco 880, and Cisco 890 Series Integrated Services Routers Software Configuration Guide*.

Technical Specifications

This appendix provides specifications for the Cisco 860, 880, 890 Series ISRs, Cisco 819 ISRs, and the Cisco 812 ISRs:

- Cisco 810 Series, page A-1
- Cisco 860, 880, 890 Series, page A-11

Cisco 810 Series

This section contains the following:

- Cisco 812 Series, page A-1
- Cisco 819 Series, page A-4

Cisco 812 Series

This section provides specifications for the Cisco 812 Integrated Services Router (ISRs) and contains the following topics:

- Router Specifications, page A-1
- Mean Time Between Failure Ground Benign Environment, page A-4

Warning **Ultimate disposal of this product should be handled according to all national laws and regulations.** Statement 1040

Note For compliance and safety information, see *Regulatory Compliance and Safety Information for Cisco 800 Series Routers*.

Router Specifications

Table A-1 lists the operational limits of the Cisco 812 ISR. Operating the router outside of the limits specified is not supported.

Table A-1 Cisco 812 ISR Specifications

Description	C812G+7-K9 (3G only)	C812G-CIFI+7-E-K9 C812G-CIFI+7-N-K9 C812G-CIFI-V-A-K9 C812G-CIFI-S-A-K9 (3G + WiFi)
Physical Characteristics		
Dimensions (H x W x D)	2.01 x 8.95 x 9.49 inches (51 x 227x 241 mm)	
Weight	3.96 lbs (1.8 kg)	
Maximum Power Consumption	11 W	18 W
Extended Shock-vibe	No	
IP41 (with DC adapter)	No	
Environmental Operating Ranges		
Operating Temperature and Altitude	–32 to 104 °F (0 to 40 °C)	
	Derate max operating temperature 1.5 °C per 1000 ft above 5000 ft	
	10,000 ft maximum except CCC[1] only up to 2000 meters.	
Humidity	Maximum 85% non-condensing RH	
Ingress Protection Rating	IP 20 per IEC 60529	
Standard Safety Certifications	• UL 60950-1, 2nd edition • CAN/CSA C22.2 No. 60950-1, 2nd edition • EN 60950-1, 2nd edition • CB to IEC 60950-1, 2nd edition with all group differences and national deviations • AS/NZS 60950-1, Edition 1 (Australia and New Zealand)	
EMC Emissions	• EN55022/CISPR22 • CFR 47 Part 15 • ICES003 • VCCI-V-3 • AS/NZS CISPR22 • CNS13438 • CISPR22 • CNS13438 • EN300-386 • EN61000-3-2 • EN61000-3-3 • EN61000-6-1	
EMC Immunity	• EN55024/CISPR24 (EN61000-4-2, EN61000-4-3, EN61000-4-4, EN61000-4-5, EN61000-4-6, EN61000-4-11) • EN300-386	

Table A-1 Cisco 812 ISR Specifications (continued)

Description	C812G+7-K9 (3G only)	C812G-CIFI+7-E-K9 C812G-CIFI+7-N-K9 C812G-CIFI-V-A-K9 C812G-CIFI-S-A-K9 (3G + WiFi)
Radio Immunity	EN301 489-1, EN 301 489-7, and EN301 489-24	
Transportation/Storage Conditions		
Temperature	–40 to158 °F (–40 to 70°C)	
Humidity	5–95%	
Altitude	4570 m (15,000 ft)	
AC Power Adapter		
Power Source	100–240 VAC	
In-ceiling Plenum	No	
IP41	No	
Extended Shock-vibe	No	
Maximum Power Consumption	25 W	
Maximum Output Power Rating	20 W	
Operating Temperature	–13 to 140 °F (–25 to 60 °C)	
PoE+ Splitter		
Power Source	PoE+ (IEEE802.3at Class 4)	
In-ceiling Plenum	Yes	
IP41	No	
Extended Shock-vibe	No	
Maximum Power Consumption	25 W	
Maximum Output Power Rating	20 W	
Operating Temperature	–13 to 140 °F (–25 to 60 °C)	
Embedded WiFi Antenna		
Frequency Range	—	2.4–2.5 Ghz 4.9–5.875 Ghz
Peak Gain	—	4 dBi (2.4 GHz) 6 dBi (5.875 Ghz)
Voltage Standing Wave Ratio	—	2.5:1 maximum for all bands
Nominal Impedance	—	50 ohms

1. Routers shipped in People's Republic of China.

Mean Time Between Failure Ground Benign Environment

Table A-2 lists the Mean Time Between Failure (MTBF) values for Cisco 812 ISRs. The MTBF is calculated based on the Ground Benign condition. The values may be adjusted based on the different router usage.

Table A-2 MTBF Values

SKUs	MTBF (hours)
C812G-CIFI-V-A-K9 C812G-CIFI-S-A-K9	210,000
C812G-CIFI+7-E-K9 C812G-CIFI+7-N-K9	280,000
C812G+7-K9	340,000

Cisco 819 Series

This section provides router, port, cabling specifications, and power adapters for the Cisco 812 ISRs and contains the following topics:

- Router Specifications, page A-4
- Mean Time Between Failure Ground Benign Environment, page A-8
- Supported Power Adapters, page A-9

Warning **Ultimate disposal of this product should be handled according to all national laws and regulations.** Statement 1040

Note For compliance and safety information, see the Regulatory Compliance and Safety Information Roadmap that was shipped with the router and *Regulatory Compliance and Safety Information for Cisco 800 Series Routers*.

Router Specifications

Table A-1 lists the operational limits of the Cisco 819 ISR. Operating the router outside of the limits specified is not supported. For the complete list of SKUs available for each Cisco 819 ISRs, see the "SKU Information" section on page 1-14.

Table A-3 Cisco 819 ISR Specifications

Description	Hardened Design Specification (Cisco 819HG and Cisco 819HG-4G ISRs)	Non-Hardened Design Specifications (Cisco 819G and Cisco 819G-4G ISRs)	Hardened Design Specifications (C819HGW and C819HWD ISRs)
Physical Characteristics			
Dimensions (H x W x D)	1.73 x 7.7 x 8.1 in (44 x 196 x 206 mm)	1.67 x 7.7 x 7.2 in (42 x 196 x 183 mm)	1.73 x 7.7 x 9.0 in (44 x 196 x 229 mm)
Weight	3.3 lb (1.5 kg)	2.3 lb (1.0 kg)	3.4 lb (1.54 kg)
Maximum Power Consumption	11 W		20 W
Environmental Operating Ranges			
Operating Temperature and Altitude	–13 to 140°F (–25 to 60°C)	32 to 104°F (0 to 40°C)	–13 to 140°F (–25 to 60°C)
	Derate max operating temperature 1.5°C per 1000 feet above 5000 ft		
	10,000 ft maximum		
Humidity	Maximum 95% non-condensing RH	Maximum 85% non-condensing RH	Maximum 95% non-condensing RH
Environmental Tests			
Ingress Protection Rating	IP 41 per IEC 60529 for Vertical Falling Water, Pollution Degree 3	IP 20 per IEC 60529	IP 41 per IEC 60529 for Vertical Falling Water, Pollution Degree 3
Humidity	Non-condensing Relative Humidity: 5% to 95%		
Pollution	Pollution 3 for Dust		
Military Standard	MIL-STD-810G Method 514.6: Procedure 1 Category 4, Secured Cargo - Common Carrier		
	MIL-STD-810G Method 514.6: Procedure 1 Category 20, Ground Vehicles		
	MIL-STD-810G Method 516.6. Procedure 1, Functional Shock		
	MIL-STD-810G Method 516.6. Procedure 5, Crash Hazard		
	MIL-STD-810G Method 516.6. Procedure 6, Bench Handling		
Vibration and Shock (Railway Vehicles)	EN61373 Functional Random Vibe - Category 1, Class B		
	EN61373 Simulated Non-op Long-life Vibe - Category 1, Class B		
	EN61373 Non-op Shock, Class B		
Heavy-Duty Vehicle Applications	SAE J1455 Operating Random Vibe, Cab Mounted Truck		
	SAE J1455 Operating Sinusoidal Vibe, Category 3		
	SAE J1455 Non-operating Sinusoidal Vibe, Category 3		
	SAE J1455 Handling Drop Test		
Certifications			

Table A-3 Cisco 819 ISR Specifications (continued)

Description	Hardened Design Specification (Cisco 819HG and Cisco 819HG-4G ISRs)	Non-Hardened Design Specifications (Cisco 819G and Cisco 819G-4G ISRs)	Hardened Design Specifications (C819HGW and C819HWD ISRs)
Standard Safety Certifications	UL 60950-1, 2nd edition; CAN/CSA C22.2 No. 60950-1, 2nd edition, EN 60950-1, 2nd edition; CB to IEC 60950-1, 2nd edition with all group differences and national deviations		UL 60950-1, 2nd edition; CAN/CSA C22.2 No. 60950-1, 2nd edition, EN 60950-1, 2nd edition; CB to IEC 60950-1, 2nd edition with all group differences and national deviations; S/NZS 60950-1, first edition (Australia/New Zealand)
EMC Emissions	EN55022/CISPR22, CFR 47 Part 15, ICES003, VCCI-V-3, AS/NZS CISPR22, CNS13438, CISPR22, CNS13438, EN300-386, EN61000-3-2, EN61000-3-3, and EN61000-6-1		
EMC Immunity	EN55024/CISPR24, (EN61000-4-2, EN61000-4-3, EN61000-4-4, EN61000-4-5, EN61000-4-6, EN61000-4-11), and EN300-386		
Radio Immunity	EN301 489-1, EN 301 489-7, and EN301 489-24		
Transportation/Storage Conditions			
Temperature	–40 to158°F (–40 to 70°C)		–40 to185°F (–40 to 85°C)
Humidity	5–95%		
Altitude	4570 m (15,000 ft)		
Router AC Power Adapter[1]			
Input Voltage	85–264 VAC 100–240 VAC nominal		
Maximum Power Consumption	25 W		
Maximum Output Power Rating	20 W (5 VDC, 4 Amps)		
Router DC Power Adapter			
Input Voltage	12 VDC nominal PWRx-20W-12VDC (10 VDC to 36 VDC operating range)		
	24 VDC nominal PWRx-20W-24VDC (18 VDC to 75 VDC operating range)		
Maximum Power Consumption	25 W		
Maximum Output Power Rating	20 W (5 VDC, 4 Amps)		

Table A-3 Cisco 819 ISR Specifications (continued)

Description	Hardened Design Specification (Cisco 819HG and Cisco 819HG-4G ISRs)	Non-Hardened Design Specifications (Cisco 819G and Cisco 819G-4G ISRs)	Hardened Design Specifications (C819HGW and C819HWD ISRs)
Altitude	Operating: –500 to 10,000 ft, de-rating operating temperature 1°C per 1,000 feet		
	Non-operating: –1,000 to 30,000 ft		
Cable Length	Input cable: 1 m Output cable: 1.3 m		
Inrush Current	50 A @ 25°C		
Temperature	Operating: –30 to 60°C, still air condition		
	Non-operating: –40 to 85°C		
Humidity	Operating: 10% to 95%, non-condensing		
	Non-operating: 10% to 95%, non-condensing		
Thermal Shock	Operating: –20 to 60°C at 0.5°C per minute		
	Non-operating: –40 to 85°C with change over time between 2 and 3 minutes.		
Vibration	Operating: 0.41 grms from 3 to 500 Hz with spectral break points of 0.0005 g2/Hz at 10 Hz and 200 Hz and 5 dB/octave roll off at each end; 2 hours per axis.		
	Non-Operating: 1.12 grms from 3 to 500 Hz with spectral break points of 0.0065 g2/Hz at 10 Hz and 100 Hz and 5 dB/octave roll off at each end; 30 minutes per axis.		
Shock	Half sine (operating): Duration = <2ms Velocity = 2.11m/s Number of shocks: a series of 6 shocks one on each side Trapezoidal shock (non-operating): Duration = 12 to 25 ms Number of shocks: a series of 6 shocks one on each side		
Martek Railway Power Adapters[2]			
Nominal Input Voltages	—	—	24 V 52 V 72 V
In-ceiling Plenum	—	—	No
IP 65	—	—	Yes
Extended Shock-vibe	—	—	Yes EN50155 (EN61373) and RIA20
Maximum Power Consumption	—	—	25 W
Maximum Output Power Rating	—	—	20 W
Operating Temperature	—	—	–13 to 140°F (–25 to 60°C)

Table A-3 Cisco 819 ISR Specifications (continued)

Description	Hardened Design Specification (Cisco 819HG and Cisco 819HG-4G ISRs)	Non-Hardened Design Specifications (Cisco 819G and Cisco 819G-4G ISRs)	Hardened Design Specifications (C819HGW and C819HWD ISRs)
Antenna (Diversity and Antenna 3G-ANTM1919D)			
Antenna Dimensions	7.63 x 0.94 x 0.63 in (19.38 x 2.39 x 1.60 cm)		
Frequency Range	806 to 960 MHz and 1710 to 2170 MHz		
Gain	0 decibels relative to isotropic (dBi) (806 to 960 MHz) and 0 dBi (1710 to 2170 MHz)		
Maximum Power	25 W		
Connector	TNC male		
Voltage Standing Wave Ratio	< 2.5:1		
Nominal Impedance	50 ohms		

1. AC Power Adapter is not IP 41 rated. Installation must include protection of the adapter and power plug from water.
2. Contact Martek Power directly for details.

Mean Time Between Failure Ground Benign Environment

Table A-4 lists the Mean Time Between Failure (MTBF) values for Cisco 819 ISRs. The MTBF is calculated based on the Ground Benign condition. The values may be adjusted based on the different router usage.

Table A-4 MTBF Values

SKUs	MTBF (hours)
Cisco 819HG and Cisco 819G ISRs	
C819HG-U-K9 C819G-U-K9	380,000
C819HG+7-A-K9 C819HG+7-K9 C819G+7-A-K9 C819G+7-K9	420, 000
C819HG-S-K9 C819HG-V-K9 C819HG-B-K9 C819G-S-K9 C819G-V-K9 C819G-B-K9	280, 000
Cisco 819HGW, Cisco 819HWD, and Cisco 819H ISRs	

Table A-4 MTBF Values (continued)

SKUs	MTBF (hours)
C819HGW-S-A-K9 C819HGW-V-A-K9	220,000
C819HGW+7-E-K9 C819HGW+7-N-K9 C819HGW+7-A-A-K9	293,000
C819HWD-E-K9 C819HWD-A-K9	630,000
C819H-K9	1,000,000
Cisco 819HG-4G and Cisco 819G-4G ISRs	
C819HG-4G-V-K9 C819G-4G-V-K9	214,000
C819HG-4G-A-K9 C819G-4G-A-K9	226,000
C819HG-4G-G-K9 C819G-4G-G-K9	293,000

Supported Power Adapters

Table A-5 and Table A-6 list the supported power adapters for Cisco 819 ISRs. The PWR1 AC and DC adapters uses molex connector while PWR2 uses barrel-type connector.

Table A-5 Cisco 819G ISR Power Adapters

Power Adapter	Nominal Input Range	C819G-4G-A-K9 C819G-4G-V-K9 C819G-4G-G-K9 (4G LTE SKUs)	C819G+7-K9 C819G-B-K9 C819G-S-K9 C819G-U-K9 C819G-V-K9 (3GSKUs)
PWR1-20W-AC	100–240 VAC	—	Yes
PWR2-20W-AC	100–240 VAC	Yes	—
PWR1-20W-12VDC	12 VDC	—	Yes
PWR2-20W-12VDC	12 VDC	Yes	—
PWR1-20W-24VDC	24 VDC	—	Yes
PWR2-20W-24VDC	24 VDC	Yes	—
PWR2-22W-20-60VDC	20-60VDC	Yes	—
Martek MBRH 0500-B/Q21	24 VDC	—	Yes
Martek MBRH 0500-C/Q21	52 VDC	—	Yes

Table A-5 Cisco 819G ISR Power Adapters

Power Adapter	Nominal Input Range	C819G-4G-A-K9 C819G-4G-V-K9 C819G-4G-G-K9 (4G LTE SKUs)	C819G+7-K9 C819G-B-K9 C819G-S-K9 C819G-U-K9 C819G-V-K9 (3GSKUs)
Martek MBRH 0500-D/Q21	72 VDC	—	Yes
Martek MBRH 0500-D/2Q21	24 VDC	Yes	Yes
Martek MBRH 0500-D/2Q21	52 VDC	Yes	Yes
Martek MBRH 0500-D/2Q21	72 VDC	Yes	Yes
Martek MBRH 0500-D/2Q21	110 VDC	Yes	Yes
Martek MBRH 0500-B/Q22	24 VDC	Yes	—
Martek MBRH 0500-C/Q22	52 VDC	Yes	—
Martek MBRH 0500-D/Q22	72 VDC	Yes	—
Martek MBRH 0500-D/2Q22	24 VDC	Yes	Yes
Martek MBRH 0500-D/2Q22	52 VDC	Yes	Yes
Martek MBRH 0500-D/2Q22	72 VDC	Yes	Yes
Martek MBRH 0500-D/2Q22	110 VDC	Yes	Yes

Table A-6 Cisco 819H ISR Power Adapters

Power Adapter	Nominal Input Range	C819HG-4G-A-K9 C819HG-4G-V-K9 C819HG-4G-G-K9 (4G LTE SKUs)	C819HG+7-K9 C819HG-B-K9 C819HG-S-K9 C819HG-U-K9 C819HG-V-K9 (3G SKUs)	C819HGW-S-A-K9 C819HGW-V-A-K9 C819HGW+7-E-K9 C819HGW+7-N-K9 C819HGW+7-A-A-K9 (3G + WiFi SKUs)	C819HWD-E-K9 C819HWD-A-K9 (WiFi SKUs)	C819H-K9 (Serial SKU)
PWR1-20W-AC	100–240 VAC	—	Yes	—	—	—
PWR2-20W-AC	100–240 VAC	Yes	—	Yes	Yes	Yes
PWR1-20W-12VDC	12 VDC	—	Yes	—	—	—
PWR2-20W-12VDC	12 VDC	Yes	—	Yes	Yes	Yes
PWR1-20W-24VDC	24 VDC	—	Yes	—	—	—
PWR2-20W-24VDC	24 VDC	Yes	—	Yes	Yes	Yes
Martek MBRH 0500-B/Q21	24 VDC	—	Yes	—	—	—
Martek MBRH 0500-C/Q21	52 VDC	—	Yes	—	—	—
Martek MBRH 0500-D/Q21	72 VDC	—	Yes	—	—	—

Table A-6 Cisco 819H ISR Power Adapters (continued)

Power Adapter	Nominal Input Range	C819HG-4G-A-K9 C819HG-4G-V-K9 C819HG-4G-G-K9 (4G LTE SKUs)	C819HG+7-K9 C819HG-B-K9 C819HG-S-K9 C819HG-U-K9 C819HG-V-K9 (3G SKUs)	C819HGW-S-A-K9 C819HGW-V-A-K9 C819HGW+7-E-K9 C819HGW+7-N-K9 C819HGW+7-A-A-K9 (3G + WiFi SKUs)	C819HWD-E-K9 C819HWD-A-K9 (WiFi SKUs)	C819H-K9 (Serial SKU)
Martek MBRH 0500-D/2Q21	24 VDC	Yes	Yes	Yes	Yes	Yes
Martek MBRH 0500-D/2Q21	52 VDC	Yes	Yes	Yes	Yes	Yes
Martek MBRH 0500-D/2Q21	72 VDC	Yes	Yes	Yes	Yes	Yes
Martek MBRH 0500-D/2Q21	110 VDC	Yes	Yes	Yes	Yes	Yes
Martek MBRH 0500-B/Q22	24 VDC	Yes	—	Yes	Yes	Yes
Martek MBRH 0500-C/Q22	52 VDC	Yes	—	Yes	Yes	Yes
Martek MBRH 0500-D/Q22	72 VDC	Yes	—	Yes	Yes	Yes
Martek MBRH 0500-D/2Q22	24 VDC	Yes	Yes	Yes	Yes	Yes
Martek MBRH 0500-D/2Q22	52 VDC	Yes	Yes	Yes	Yes	Yes
Martek MBRH 0500-D/2Q22	72 VDC	Yes	Yes	Yes	Yes	Yes
Martek MBRH 0500-D/2Q22	110 VDC	Yes	Yes	Yes	Yes	Yes

Cisco 860, 880, 890 Series

This section provides router, port, and cabling specifications for the Cisco 860 series, Cisco 880 series, and Cisco 890 series ISRs. It contains the following topics:

- Router Specifications, page A-12
- Wireless Access Point, page A-22
- FE and GE Port Pinouts, page A-23
- Console and Auxiliary Port Connector Pinouts, page A-24
- FXS and FXO Port Connector Pinouts, page A-24
- VDSL2 Port Connector Pinouts, page A-24
- ADSL2+ Port Connector Pinouts, page A-25
- V.92 Port Connector Pinouts, page A-25

- G.SHDSL Port Connector Pinouts, page A-25
- Data BRI Port Connector Pinouts, page A-26
- Voice ISDN BRI Interface Pin Numbers and Functions, page A-27
- SFP Port Connector Pinouts, page A-27
- Cable Specifications, page A-28

Warning **Ultimate disposal of this product should be handled according to all national laws and regulations.** Statement 1040

Note For compliance and safety information, see *Regulatory Compliance and Safety Information Roadmap* that was shipped with the router and *Regulatory Compliance and Safety Information for Cisco 800 Series Routers*.

Note The product has some color variation on the Power Pin. This will not impact product performance or reliability.

Router Specifications

This sections contains the following:

- All Models Except Cisco 860VAE Series, page A-12
- Cisco 860VAE Series, page A-14
- Cisco 860VAE-W-A-K9, Cisco 860VAE-W-E-K9, and Cisco 860VAE-POE-W-A-K9 Series, page A-15
- Cisco 870 Series, page A-16
- Cisco 880 Series, page A-17
- Cisco 880G Series 3G Wireless Integrated Services Router, page A-19
- Cisco 880VA Series, page A-19
- Cisco 890 Series, page A-21

All Models Except Cisco 860VAE Series

Table A-7 lists the system specifications for all models except the Cisco 860VAE series routers.

Table A-7 Router Specifications

Description	Design Specification (all models except Cisco 860VAE series)
Physical Dimensions	
Dimensions with antenna and rubber feet (H x W x D)	1.9 x 12.8 x 10.4 in.
Weight (not including desktop power supply)	5.5 lb (2.5 kg), maximum
Environmental Operating Ranges	
Nonoperating temperature	–4 to 149°F (–20 to 65°C)
Nonoperating humidity	5 to 95% relative humidity
Nonoperating altitude	0 to 15,000 ft (4570 m)
Operating temperature	32 to 104°F (0 to 40°C)
Operating humidity	10 to 85% relative humidity
Operating altitude	0 to 10,000 ft (3000 m)
Acoustic	
Acoustic: Sound Pressure (Typical/Maximum) for single fan units	Low speed 31.4 dBa High speed 44.1 dBa
Acoustic: Sound Power (Typical/Maximum) for dual fan units	Low speed 38.9 dBA High speed 51.7 dBa
Router Power Adapter	
Input voltage	100 to 240 VAC Nominal
Input frequency	47 to 63 Hz
Power output	60 W, maximum
Output voltages	+12 VDC
Inline Power-over-Ethernet Adapter	
Input voltage	85 to 264 VAC
Input frequency	47 to 63 Hz
Power output	80 W, maximum
Output voltage	–48 VDC

Cisco 860VAE Series

Table A-8 lists the system specifications for the Cisco 860VAE series routers.

Table A-8 Router Specifications

Description	Design Specification Cisco 860VAE series
Physical Dimensions	
Dimensions with antenna and rubber feet (H x W x D)	1.75 x 9.5 x 9 in.
Weight (not including desktop power supply)	3.3 lb (1.5 kg) The total weight depends on customer-selected options.
Environmental Operating Ranges	
Nonoperating temperature	–4 to 149°F (–20 to 65°C)
Nonoperating humidity	5 to 95% relative humidity
Nonoperating altitude	0 to 15,000 ft (4570 m)
Operating temperature	32 to 104°F (0 to 40°C)
Operating humidity	10 to 85% relative humidity
Operating altitude	0 to 10,000 ft (3000 m)
Acoustic	
Acoustic: Sound Pressure (Typical/Maximum) for single fan units	N/A, no fan
Acoustic: Sound Power (Typical/Maximum) for dual fan units	N/A, no fan
Router Power Adapter	
Input voltage	100 to 240 VAC Nominal
Input frequency	47 to 63 Hz
Power output	30 W, maximum
Output voltages	+12 VDC
Inline Power-over-Ethernet Adapter	
Input voltage	not supported
Input frequency	
Power output	
Output voltage	
AC Adapter for Cisco 867VAE	
AC Adapter	PWR-30W-AC
Environmental Operating Ranges	
Nonoperating temperature	–40 to 85°C
Nonoperating humidity	10% to 95%, non condensing

Table A-8 Router Specifications (continued)

Description	Design Specification Cisco 860VAE series
Operating temperature	-5 to 45° C
Operating humidity	10% to 90%, non condensing

Cisco 860VAE-W-A-K9, Cisco 860VAE-W-E-K9, and Cisco 860VAE-POE-W-A-K9 Series

Table A-9 lists the system specifications for the Cisco 860VAE-W-A-K9, Cisco 860VAE-W-E-K9, and Cisco 860VAE-POE-W-A-K9 series routers.

Table A-9 Technical Specifications

Description	Specification
Physical Dimensions	
Enclosure	9.5 x 9 x 1.75 in. (W x D x H)
Storage Environment	
Temperature	-25 C to +70 C
Altitude	4570 m (15000 ft)
Humidity	5–95% Relative Humidity
Operating Environment	
Temperature	0 C to +40 C
Altitude	3000 m (10000 ft)
Humidity	10–85% Relative Humidity
Maximum temperature of enclosure surface	No higher than 70 C when the ambient temperature is 40 C
Acoustic	
Sound Pressure	N/A—Convection cooled, no fan
Power Supply	
External power supply	C866VAE-W-E-K9, C867VAE-W-A-K9, C867VAE-W-E-K9 models: Input: 100–240 VAC, Frequency range 50–60 Hz Output: 12 VDC, 2.5 A, 30 W
	C867VAE-POE-W-A-K9 model: Input: 100–240 VAC, Frequency range 50–60 Hz Output: 12 VDC, 5 A, 60 W
Inline Power-over-Ethernet (PoE): C867VAE-POE-W-A-K9 Model Only	
	IEEE 802.3af compliant
Wireless LAN	

Table A-9 Technical Specifications

Description	Specification
Radio technology	IEEE 802.11n draft 2.0 standard compliant. Backward compatible with 802.11b/g.
Operating Frequency	2.4 GHz radio band
Bandwidth	20 MHz
Channels	Country-specific: America SKU(-W-A): Channels 1–11 Europe SKU(-W-E): Channels 1–13

Cisco 870 Series

Table A-12 lists the system specifications for the Cisco 870 series routers.

Table A-10 Router Specifications

Description	Design Specification
Physical Dimensions	
	• H x W x D = 2.00 x 10.25 x 8.50 in. (50.8 mm x 260.4 mm x 215.9.9 mm) (nonwireless models) • H x W x D = 2.00 x 10.25 x 9.13 in. (50.8 mm x 260.4 mm x 231.9 mm) (wireless models with antenna connectors, excludes antennae) • Weight: 2.10 lb (0.954 kg) maximum
Optional external PoE adapter dimensions	• H x W x D = 1.13 x 4.00 x 10.25 in. (28.9 x 101.6 x 260.4 mm) (cables included) • H x W x D = 1.13 x 4.00 x 4.25 in. (28.9 x 101.6 x 108 mm) (cables not included) • Weight = 0.32 lb (0.143 kg)
Environmental Operating Ranges	
Nonoperating temperature	-4 to 149°F (-20 to 65°C)
Nonoperating humidity	5 to 95 percent relative humidity (noncondensing)

Table A-10 Router Specifications (continued)

Description	Design Specification
Nonoperating altitude	0 to 15,000 ft (0 to 4570m)
Operating temperature	32 to 104°F (0 to 40°C)
Operating humidity	10 to 85%, relative humidity (noncondensing)
Operating altitude	0 to 10,000 ft (0 to 3000m)
Power Supply	
AC input voltage	100 to 240 VAC
Frequency	50 to 60 Hz
Maximum output power	26W
Output voltages	5 and 12V
Optional external Inline PoE adapter specifications	
	802.3af compliant (Mid-span power delivered via pins 4,5,7 & 8)
AC Input Voltage	100 to 240 VAC
Frequency	50 to 60 Hz
AC Input Current	1A maximum
Maximum output power	80W
Output voltage	48 VDC

Cisco 880 Series

Table A-12 lists the system specifications for the Cisco 880 series routers.

Table A-11 Router Specifications

Description	Design Specification
Physical Dimensions	
	Nonwireless models (H x W x D): • 1.9 x 12.8 x 9.8 in. (48 x 325 x 249 mm) (includes rubber feet) • 1.75 x 12.8 x 9.8 in. (44 x 325 x 249 mm) (without rubber feet) **Wireless models (H x W x D):** • 1.9 x 12.8 x 10.4 in. (48 x 325 x 264 mm) (includes rubber feet) • 1.75 x 12.8 x 10.4 in. (44 x 325 x 264 mm) (without rubber feet; excludes antennas) • Weight: 5.5 lb (2.5 kg) maximum
External Power Supply	Universal 100 to 240 VAC input; 60W, 12 VDC output
Router Power Specifications	
AC input voltage	100 to 240 VAC
Frequency	50 to 60 Hz
Maximum output power	60W
Output voltages	12 VDC
Optional internal PoE with external adapter	
Maximum output power	80W
External output voltage	48 VDC
Environmental Operating Ranges	
Nonoperating temperature	-4 to 149°F (-20 to 65°C)
Nonoperating humidity	5 to 95% relative humidity (noncondensing)
Nonoperating altitude	0 to 15,000 ft (0 to 4570m)
Operating temperature	• At sea level: 32 to 104°F (0 to 40°C) • Up 10,000 ft: 32 to 77°F (0 to 25°C) • Derating 2.7°F/10000 ft (1.5°C/1000 ft)
Operating humidity	10 to 85% relative humidity (noncondensing)
Operating altitude	0 to 10,000 ft (0 to 3000m)

Cisco 880G Series 3G Wireless Integrated Services Router

Table A-12 lists the system specifications for the Cisco 880G series 3G Wireless Integrated Services routers.

Table A-12 Router Specifications

Description	Design Specification
Physical Dimensions	
Nonwireless models	• H x W X D = 1.9 x 12.8 x 9.8 in. (48 x 325 x 249 mm) (includes rubber feet) • H x W X D = 1.75 x 12.8 x 9.8 in. (44 x 325 x 249 mm) (without rubber feet) • Weight: 5.5 lb (2.5 kg) maximum
Environmental Operating Ranges	
Nonoperating temperature	-4 to 149°F (-20 to 65°C)
Nonoperating humidity	5 to 95 percent relative humidity (noncondensing)
Nonoperating altitude	0 to 15,000 ft (0 to 4570m)
Operating temperature	32 to 104°F (0 to 40°C)
Operating humidity	10 to 85%, relative humidity (noncondensing)
Operating altitude	0 to 10,000 ft (0 to 3,000m)
Power Supply	
External Power Supply	Universal 100- to 240-VAC input; 60W, 12-VDC output
Router Power Specifications	
AC Input voltage	100 to 240 VAC
Input frequency	50 to 60 Hz
Power output	60W
Output voltages	12 VDC
Optional internal PoE with external adapter	
Maximum output power	80W
Output voltage, external	48 VDC

Cisco 880VA Series

Table A-12 lists the system specifications for the Cisco 880VA series routers.

Table A-13 Router Specifications

Description	Design Specification
Physical Dimensions	
	Nonwireless models: • H x W x D = 1.9 x 12.8 x 9.8 in. (48 x 325 x 249 mm) (includes rubber feet) • H x W x D = 1.75 x 12.8 x 9.8 in. (44 x 325 x 249 mm) (without rubber feet) **Wireless models:** • H x W x D = 1.9 x 12.8 x 10.4 in. (48 x 325 x 264 mm) (includes rubber feet) • H x W x D = 1.75 x 12.8 x 10.4 in. (44 x 325 x 264 mm) (without rubber feet; excludes antennas) • Weight: 5.5 lb (2.5 kg) maximum
Environmental Operating Ranges	
Nonoperating temperature	-4 to 149°F (-20 to 65°C)
Nonoperating humidity	5 to 95% relative humidity (noncondensing)
Nonoperating altitude	0 to 15,000 ft (0 to 4570m)
Operating temperature	• At sea level: 32 to 104°F (0 to 40°C) • Up 10,000ft: 32 to 77 °F (0 to 25°C) • Derating 2.7°F/10000 ft (1.5°C [304.8m])
Operating humidity	10 to 85% relative humidity (noncondensing)
Operating altitude	0 to 10,000 ft (0 to 3000m)
Power Supply	
AC input voltage	100 to 240 VAC
Frequency	50 to 60 Hz
Maximum output power	60W
Output voltages	12 VDC
Optional internal PoE with external adapter	
	• Maximum output power: 80W • External output voltage: 48 VDC

Cisco 890 Series

Table A-12 lists the system specifications for the Cisco 890 series routers.

Table A-14 Router Specifications

Description	Design Specification
Physical Dimensions	
Cisco 891, 892, and 892F	**Nonwireless models:** • H x W x D = 1.9 x 12.8 x 9.8 in. (4.8 x 32.5 x 24.9 cm) (includes rubber feet) • H x W x D = 1.75 x 12.8 x 9.8 in. (4.5 x 32.5 x 24.9 cm) (without rubber feet) **Wireless models:** • H x W x D = 1.9 x 12.8 x 10.4 in. (4.8 x 32.5 x 26.4 cm) (includes rubber feet) • H x W x D = 1.75 x 12.8 x 10.4 in. (4.5 x 32.5 x 26.4 cm) (without rubber feet; excludes antennas) • Weight: 5.5 lb (2.5 kg) maximum
Cisco 892FSP, 896VA, 897VA, 898EA and 891F	• H x W x D =1.82 x 12.71 x 9.78 in. (4.62 x 32.28 x 24.84 cm) (includes rubber feet) • H x W x D = 1.75 x 12.71 x 9.78 in. (4.45 x 32.28 x 24.84 cm) (without rubber feet)
Environmental Operating Ranges	
Nonoperating temperature	-4 to 149°F (-0 to 65°C)
Nonoperating humidity	5 to 95% relative humidity (noncondensing)
Nonoperating altitude	0 to 15,000 ft (0 to 4570m)
Operating temperature	32 to 104°F (0 to 40°C)
Operating humidity	10 to 85% relative humidity (noncondensing)
Operating altitude	0 to 10,000 ft (0 to 3000m)
Power Supply	
External Power Supply	
AC input voltage	Universal 100 to 240 VAC
Frequency	50 to 60 Hz
Maximum output power	60W
Output voltages	12 VDC

Table A-14 Router Specifications (continued)

Description	Design Specification
Optional POE	• Separate 80W POE power supply for Cisco 891 and 892 ISRs • Single 125W power supply required for Cisco 896, 897, 898 and 891F for router and PoE
External output voltage	48 VDC

Power Supply

Table A-15 lists the maximum input values for the power supply used with the Cisco 860, 880, 890 series ISRs.

Table A-15 Maximum Input Values for the power supply used with Cisco 860, 880, 890 series ISRs

Power Supply Unit	100 Volt	240 Volt
30 W	1 Ampere	0.5 Ampere
60 W	1.5 Ampere	0.7 Ampere

Wireless Access Point

Table A-16 lists the specifications for the wireless access point (AP).

Table A-16 Wireless Access Point Specifications

Description	Design Specification
Radio technology	IEEE 802.11n draft 2.0 standard compliant. 2x3 MIMO[1] radio. Backward compatible with 802.11b/g and 802.11a (Cisco 890 series routers).
Operating frequency	**Cisco 860 series and 880 series ISRs** 2.4-GHz radio band **Cisco 890 series ISRs** 2.4 and 5-GH radio bands
Channels	Country-specific 20 and 40 MHz
PHY Data rate	802.11b up to 11 Mb/s 802.11g up to 54 Mb/s 802.11n up to 300 Mb/s

1. MIMO = Multiple Input/Multiple Output.

FE and GE Port Pinouts

Table A-17 describes the RJ-45 connector pinouts for Fast Ethernet (FE) ports with Power over Ethernet (PoE). Some models support PoE using an optional module, and some models do not support PoE. For ports that do not support PoE, pins 4, 5, 7, and 8 are not connected.

- Cisco 860VAE and 860VAE-K9 ISRs do not support PoE.
- Cisco 880 series ISRs can include an optional PoE module that provides power to 802.3af-compliant devices connected to FE ports 0 and 1.
- Cisco 890 series ISRs can include an optional PoE module that provides power to 802.3af-compliant devices connected to FE ports 0, 1, 2, and 3.

Table A-17 Ethernet FE LAN Port Pinouts

Pin	Function
1	RX+[1]
2	RX–
3	TX+[2]
4	PoE—optional
5	PoE—optional
6	TX–
7	PoE—optional
8	PoE—optional

1. RX = Receive
2. TX = Transmit

Table A-18 describes the RJ-45 connector pinouts for the Gigabit Ethernet (GE) ports of the Cisco 860VAE and 860VAE-K9 ISRs.

Table A-18 Ethernet GE Port Pinouts

Pin	GE Signal (LAN and WAN)
1	Tx A+[1]
2	Tx A-
3	Rx B+[2]
4	Tx C+
5	Tx C-
6	Rx B-
7	Rx D+
8	Rx D-

1. TX = Transmit
2. RX = Receive

Console and Auxiliary Port Connector Pinouts

Table A-19 lists the pinouts for the console and auxiliary port connectors.

Table A-19 Console and Auxiliary Port Connector Pinouts

RJ-45 Pin	Function
1	RTS
2	DTR
3	TXD
4	GND
5	GND
6	RXD
7	DSR
8	CTS

FXS and FXO Port Connector Pinouts

Table A-20 lists the FXS and FXO connector pinouts.

Table A-20 FXS and FXO Connector Pinouts (RJ-11-to-RJ-45)

Pin	Signal
1	NC
2	NC
3	TIP
4	RING
5	NC
6	NC

VDSL2 Port Connector Pinouts

Table A-21 lists the VDSL2 connector pinouts.

Table A-21 VDSL2 Connector Pinouts (RJ-11-to-RJ-45)

RJ-11 Pin	Function
1	Unused
2	Unused
3	TIP
4	RING

Table A-21 VDSL2 Connector Pinouts (RJ-11-to-RJ-45) (continued)

RJ-11 Pin	Function
5	Unused
6	Unused

ADSL2+ Port Connector Pinouts

Table A-22 lists the ADSL2+ connector pinouts.

Table A-22 ADSL2+ Connector Pinouts (RJ-11)

RJ-11 Pin	Function
1	Unused
2	Unused
3	TIP
4	RING
5	Unused
6	Unused

V.92 Port Connector Pinouts

Table A-23 lists the V.92 connector pinouts.

Table A-23 V.92 Connector Pinouts (RJ-11-to-RJ-45)

RJ-11 Pin	Function
1	Unused
2	Unused
3	TIP
4	RING
5	Unused
6	Unused

G.SHDSL Port Connector Pinouts

Table A-24 lists the pinouts for the symmetrical high-speed DSL (G.SHDSL) WAN port for two-pair products, including the following router model(s):

- C888

Table A-24 G.SHDSL WAN Port Pinouts for Two-Pair Products

Pin	Function
1	Unused
2	TIP (Port1)
3	TIP (Port0)
4	RING (Port0)
5	RING (Port1)
6	Unused

Table A-25 lists the pinouts for the symmetrical high-speed DSL (G.SHDSL) WAN port for four-pair products, including the following router models:

- C888E
- C888EW
- C888EA

Table A-25 G.SHDSL WAN Port Pinouts for Four-Pair Products

Pin	Function
1	TIP (Port1)
2	RING (Port1)
3	TIP (Port2)
4	TIP (Port0)
5	RING (Port0)
6	RING (Port2)
7	TIP (Port3)
8	RING (Port3)

Data BRI Port Connector Pinouts

Table A-26 lists the pinouts for the Data BRI port.

Table A-26 Data BRI Port Pinouts

Pin	Function
1	Unused
2	Unused
3	TXP
4	RXP
5	TXN
6	TXN

Table A-26 Data BRI Port Pinouts (continued)

Pin	Function
7	Unused
8	Unused

Voice ISDN BRI Interface Pin Numbers and Functions

Table A-27 lists the interface pin numbers and functions for the voice ISDN BRI port.

Table A-27 Interface Pin Numbers and Functions

ISDN BRI NT/TE Card	NT Interface[1]	TE Interface[2]
Pin 3/T+	Pin 3/R+	Pin 3/T+
Pin 4/R+	Pin 4/T+	Pin 4/R+
Pin 5/R-	Pin 5/T-	Pin 5/R-
Pin 6/T-	Pin 6/R-	Pin 6/T-

1. Use a straight-through cable for NT interfaces.
2. Use a crossover cable for TE interfaces.

SFP Port Connector Pinouts

Table A-28 lists the pinouts for the SFP port.

Table A-28 SFP Port Pinouts

Pin	Function
1	TX Ground
2	TX Fault
3	TX disable
4	Module definition 2
5	Module definition 1
6	Module definition 0
7	Rate Select
8	Loss of signal
9	Receiver ground
10	Receiver ground
11	Receiver ground
12	Inverted received data out
13	Received data out
14	Receiver ground
15	Receiver power

Table A-28 SFP Port Pinouts (continued)

Pin	Function
16	Transmitter power
17	Transmitter ground
18	Transmit data in
19	Inverted transmit data in
20	Transmitter ground

Cable Specifications

This section provides specifications for the following Ethernet cables:

- Straight-through cable
- Crossover cable

Because of the autocrossover (autosensing) function, both straight-through and crossover cables can be used for the Ethernet LAN port.

Ethernet Cable Specifications

Table A-29 lists the specifications that apply to both straight-through and crossover Ethernet cables.

Table A-29 Ethernet Cable Specifications

Type	Category
10BASE-T	Category 3 or 5
100BASE-T	Category 5 or higher
1000BASE-T	Category 5 or higher

Maximum Cable Length

The maximum length for the Ethernet cables that connect equipment to the router is 328 feet (100 meters). This length is also the maximum distance between the router and the equipment connected to it.