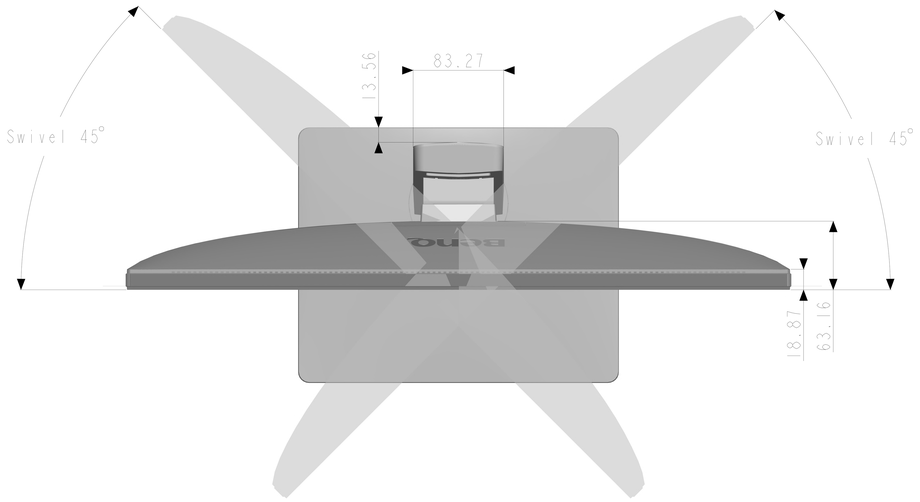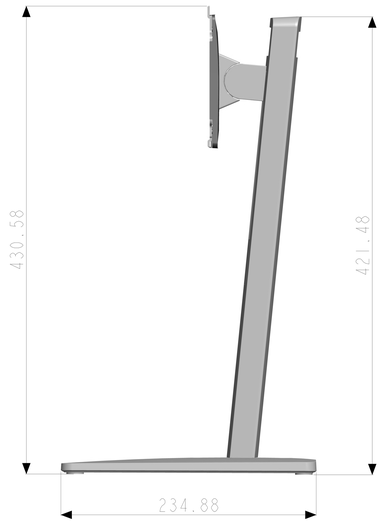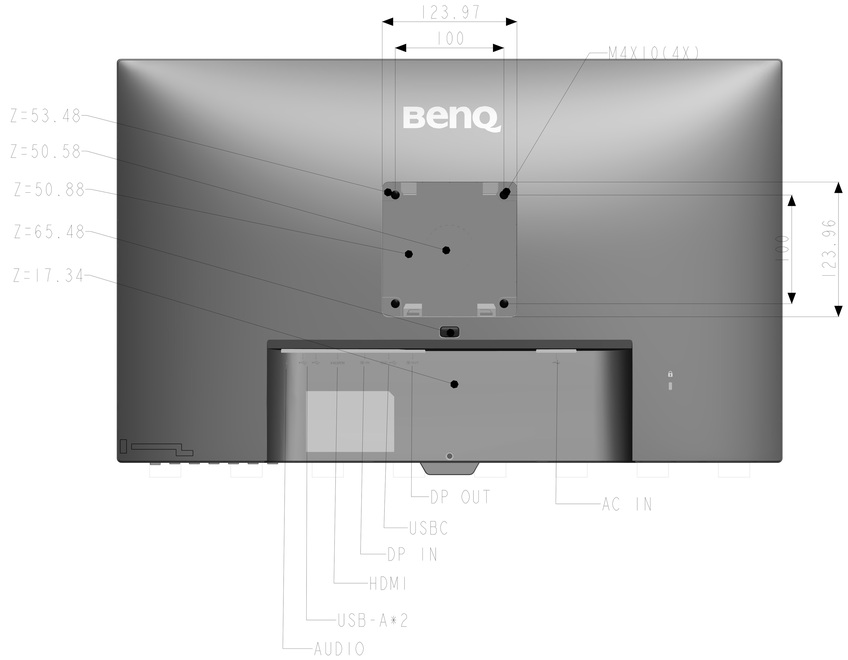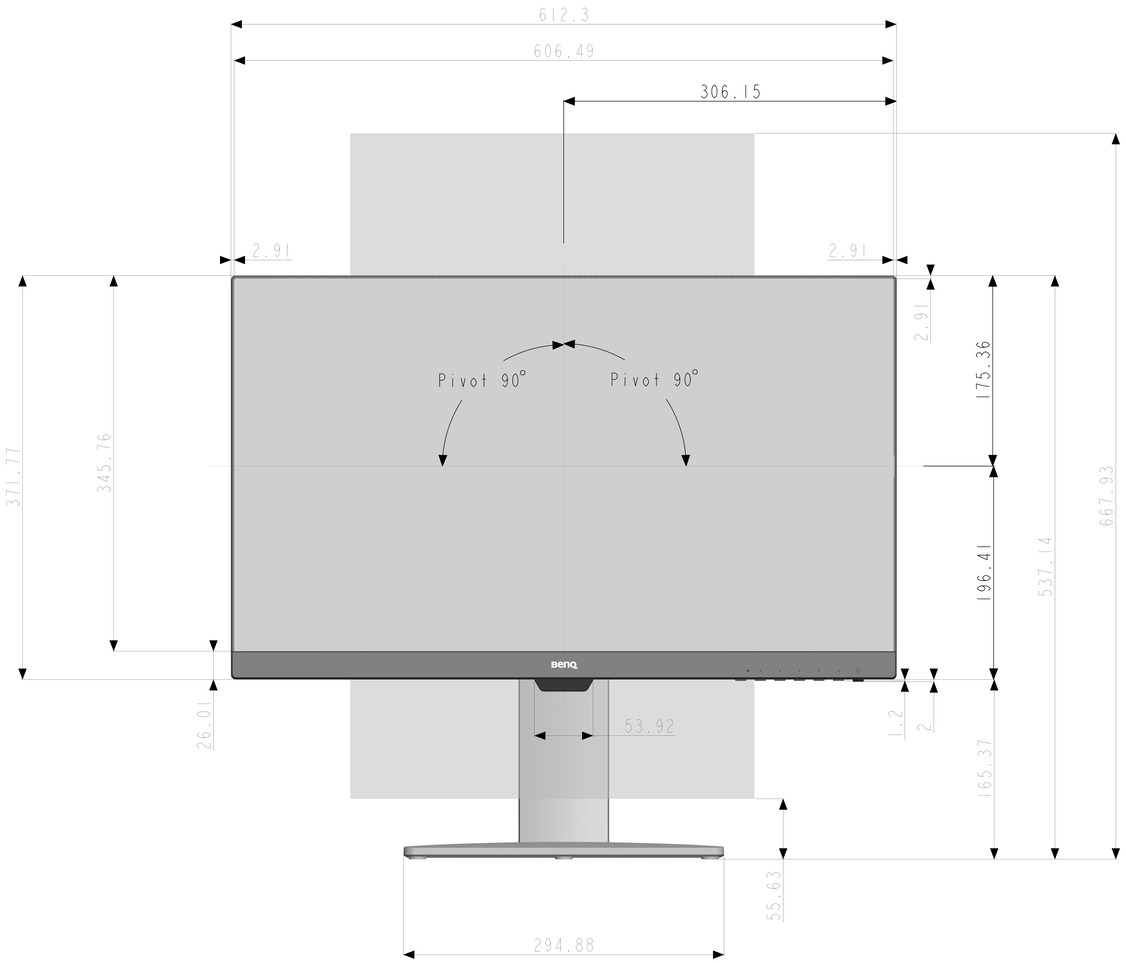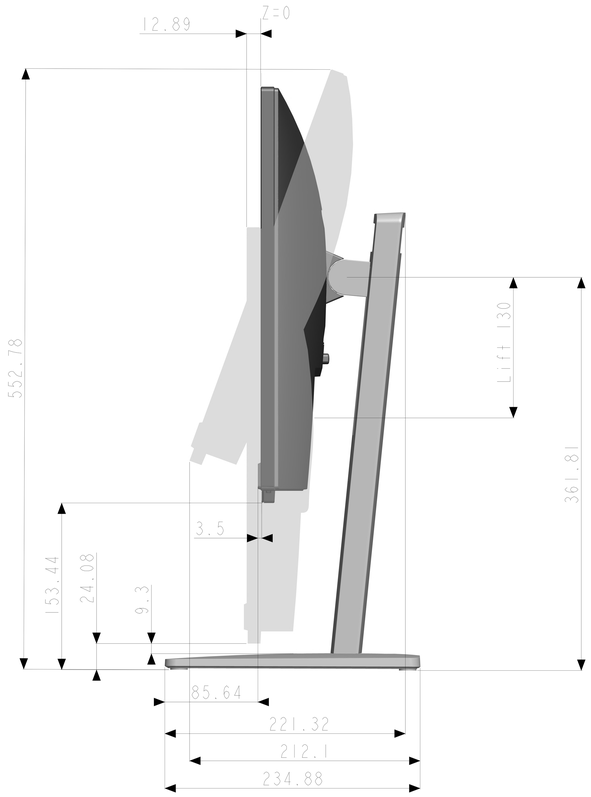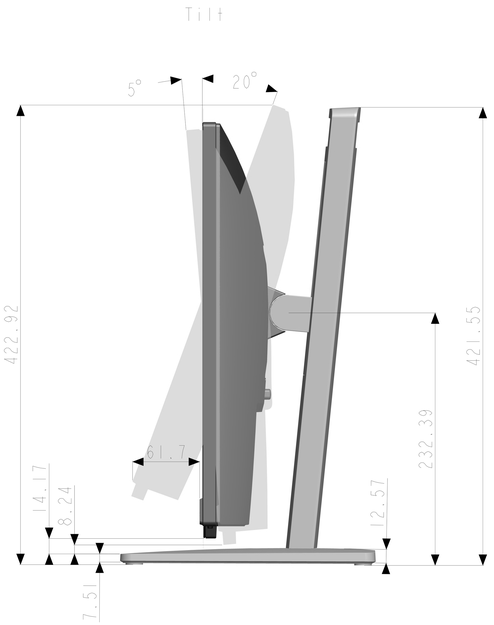BENQ MODEL NAME GW2786TC_BL2786TC
Unit: mm
Dimension: Norminal
Drawing: Not to Scale