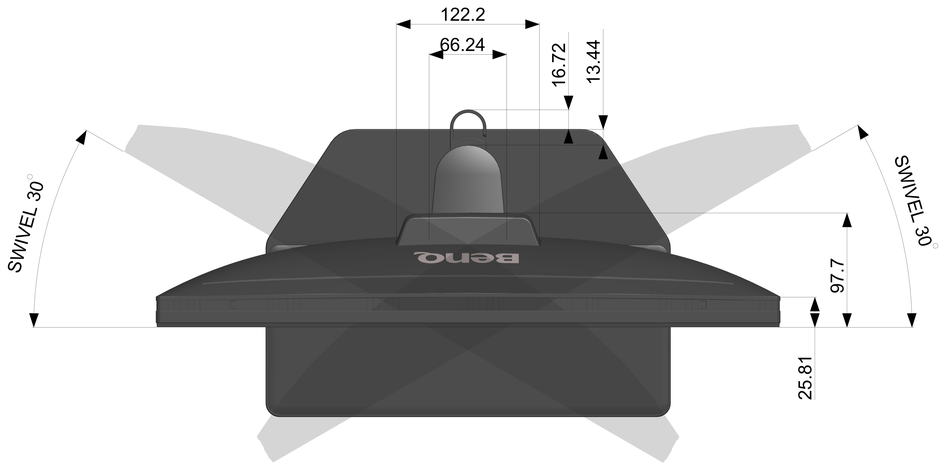
122.2
66.24
16.72
13.44
SWIVEL 30°
SWIVEL 30°
97.7
25.81

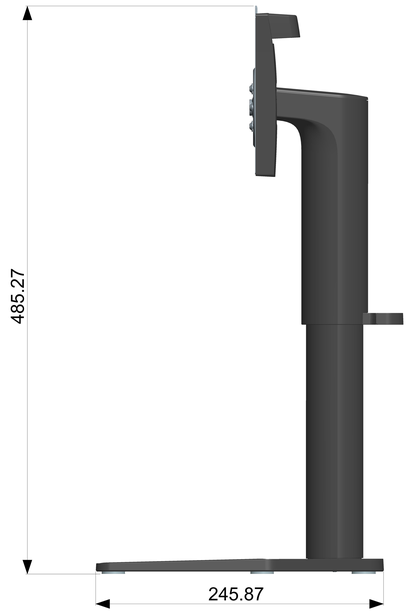
485.27
245.87

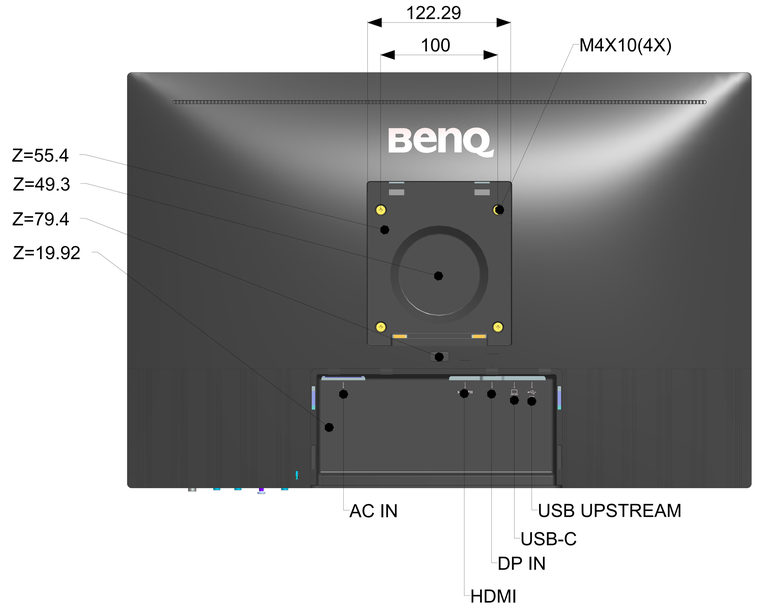
122.29
100
M4X10(4X)
Z=55.4
Z=49.3
Z=79.4
Z=19.92
AC IN
USB UPSTREAM
USB-C
DP IN
HDMI

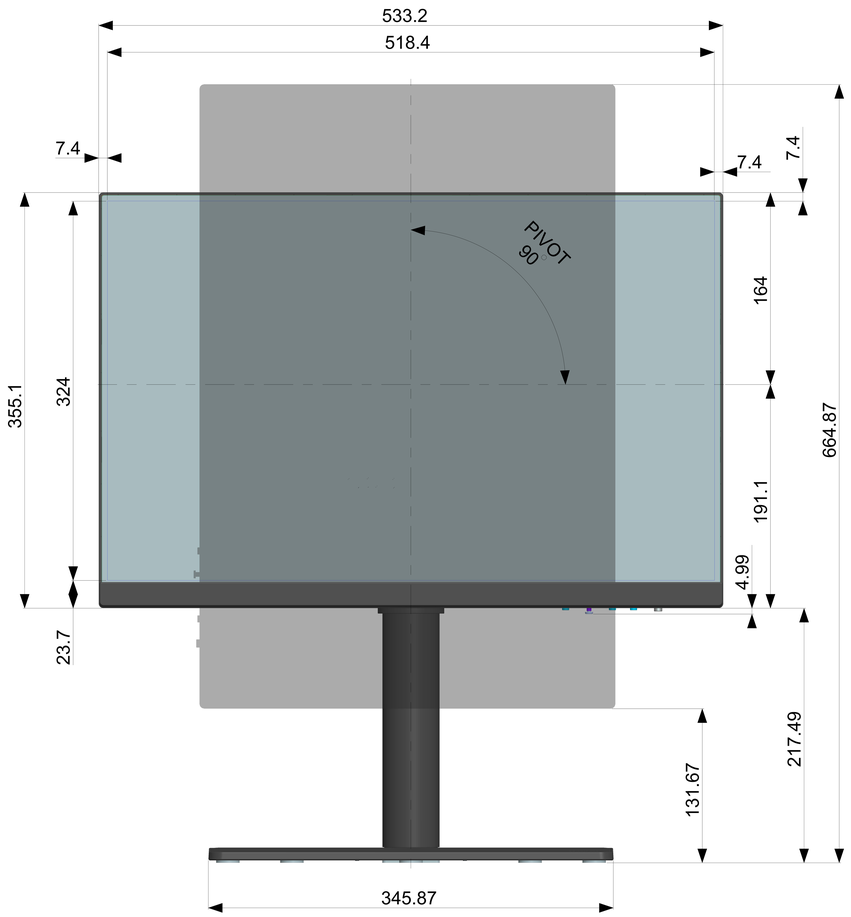
533.2
518.4
7.4
7.4
7.4
PIVOT
90
164
355.1
324
664.87
191.1
4.99
23.7
217.49
131.67
345.87

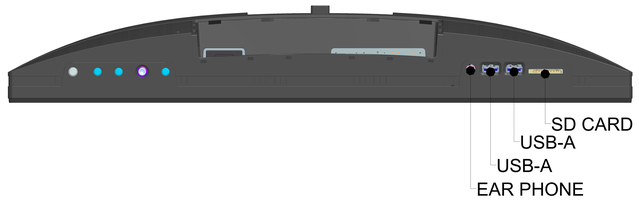
SD CARD
USB-A
USB-A
EAR PHONE

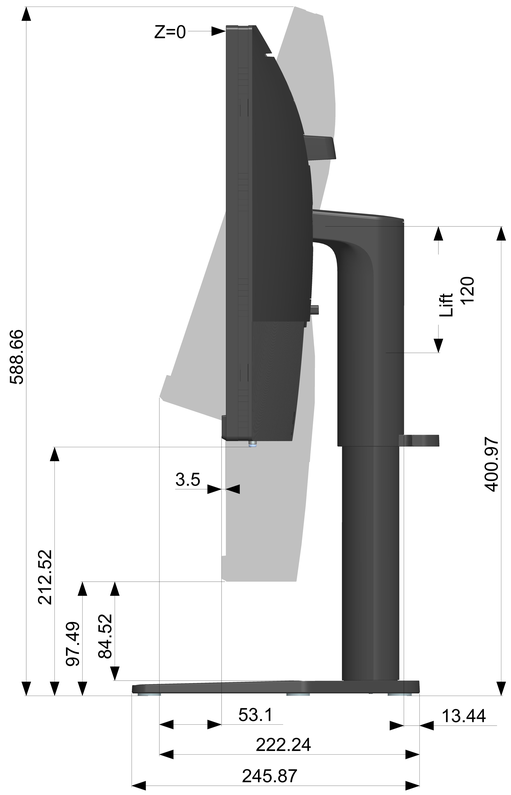
Z=0
588.66
Lift
120
400.97
3.5
212.52
97.49
84.52
53.1
13.44
222.24
245.87

TILT

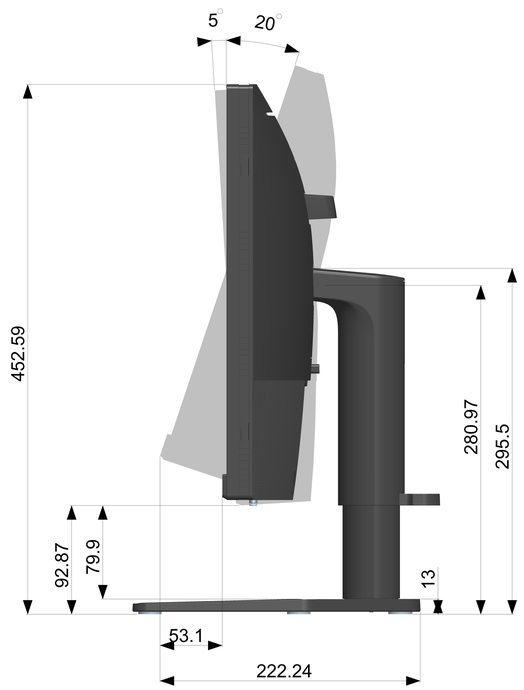
5°
20°
452.59
280.97
295.5
92.87
79.9
13
53.1
222.24