EK-Classic GPU Water Block RTX 2080Ti D-RGB

GPU WATER BLOCK

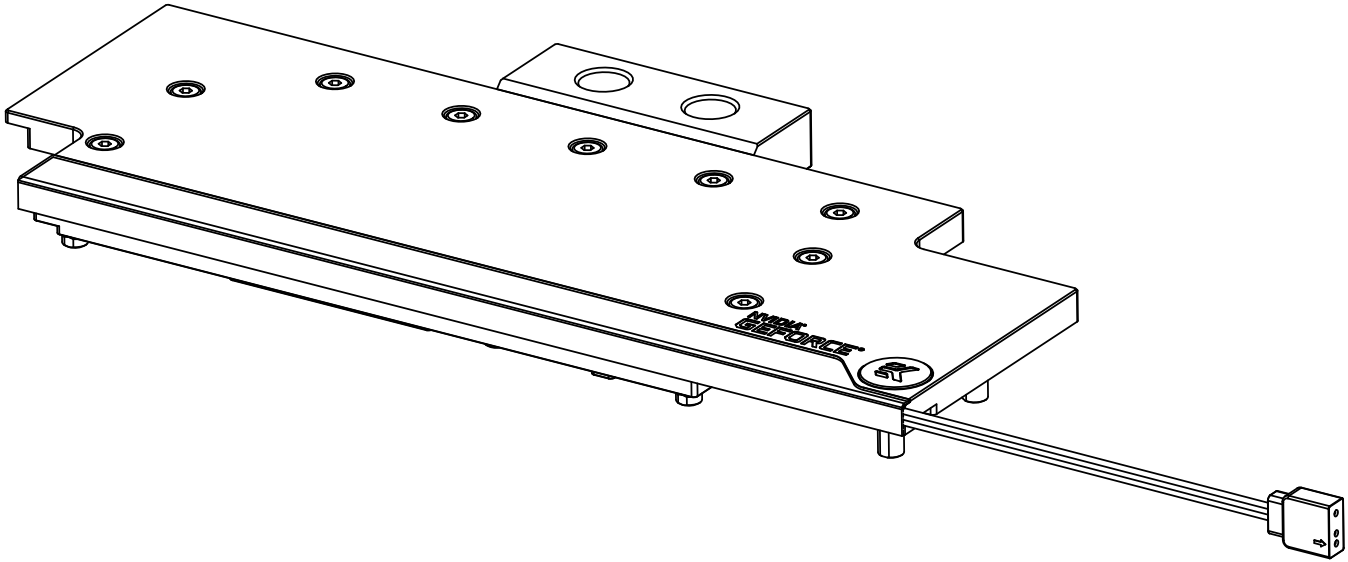

1st Revision, Jun 4th 2020

INSTALLATION MANUAL

This product is compatible with RTX 2080 and RTX 2080 Ti graphic card. It is intended for installation only by expert users. Please consult with a qualified technician for installation. Improper installation may result in damage to your equipment. EK Water Blocks assumes no liability whatsoever, expressed or implied, for the use of these products, nor their installation. The following instructions are subject to change without notice. Please visit our web site at www.ekwb.com for updates. Before installation of this product please read important notice, disclosure and warranty conditions printed on the back of the box.

Before you start using this product please follow these basic guidelines:

Please carefully read the manual thoroughly before beginning with the installation process!

Please remove your graphics card from the computer to assure safest mounting process in order to prevent any possible damages to your GPU and/or graphics card circuit board (PCB).

The EK fittings require only a small amount of force to screw them firmly in place since the liquid seal is ensured by the rubber O-ring gaskets.

The use of corrosion inhibiting coolants is always recommended for any liquid cooling system.

Do not use pure distilled water! For best results EK recommends the use of EK-CryoFuel coolants!

TABLE OF CONTENT

PREPARING YOUR GRAPHIC CARD 4
INSTALLING THE WATER BLOCK FOR RTX 2080 / RTX 2080 TI GRAPHIC CARD 7
CHECKING FOR CONTACTS 8
INSTALLATION OF FITTINGS AND TUBING 8
INSERTING THE CARD IN YOUR PC CASE 9
REQUIRED TOOLS 9
CONNECTING THE D-RGB LED STRIP 10
SUPPORT AND SERVICE 11
SOCIAL MEDIA 11

PREPARING YOUR GRAPHIC CARD

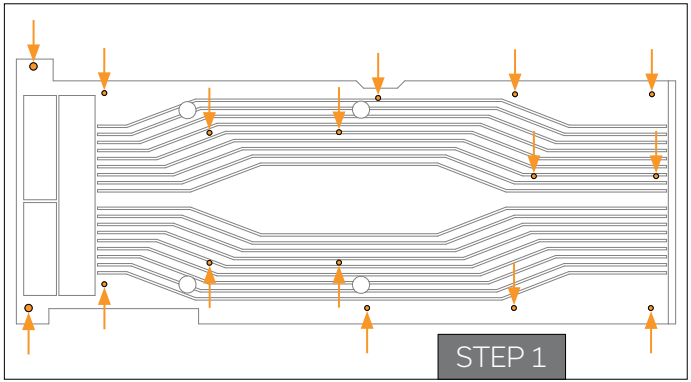

STEP 1
REMOVING FACTORY PROVIDED BACKPLATE
Remove all encircled screws using Phillips screwdriver. All heat sink assembly screws should be removed, including self-adhesive washers on both sides of the PCB (if present).

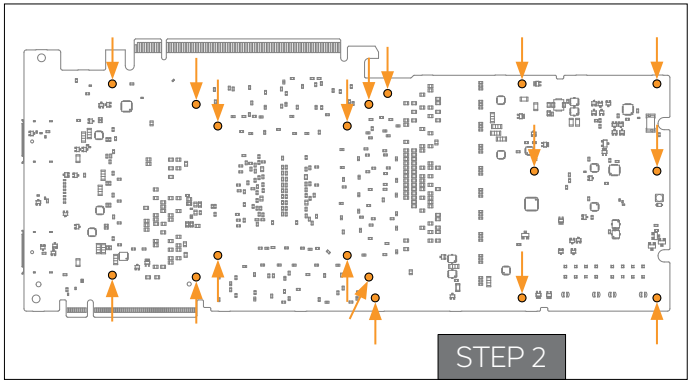

STEP 2
REMOVING STOCK COOLER
Remove all encircled screws using Phillips screwdriver (4 springs) and 4mm hex socket. All heat sink assembly screws should be removed, including self-adhesive washers on both sides of the PCB (if present). After you remove the housing do not forget to unplug the fans.

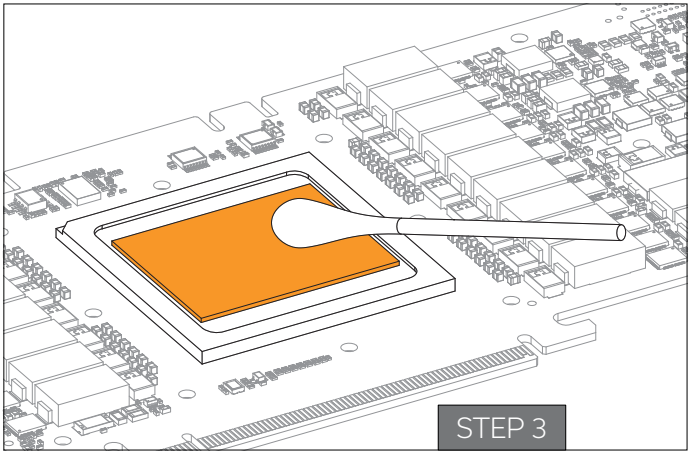

STEP 3
CLEANING THE PCB

Carefully detach the original stock cooler after removing all screws securing it to the board. Wipe off the remains (by using non-abrasive cloth or q-tip, as shown on sample photo) of the original thermal compound until the components and circuit board are completely clean. EKWB recommends the use of denatured alcohol for removing TIM leftovers.

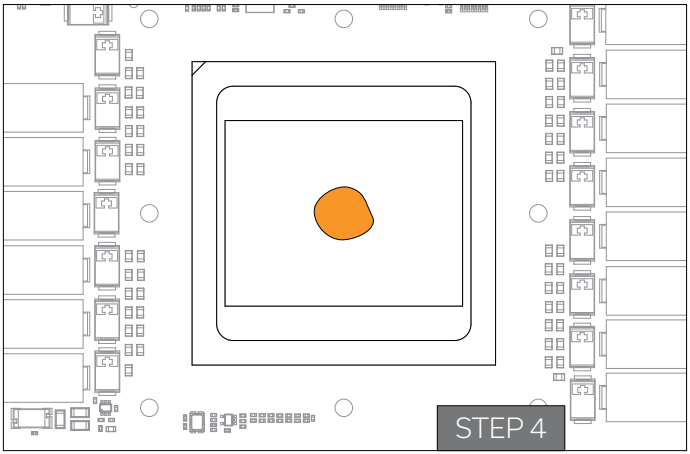

STEP 4
APPLYING THERMAL COMPOUND

Wipe off the remains (by using non-abrasive cloth or q-tip) of the original thermal compound until the components and circuit board are completely clean. Apply thermal compound: lightly coat NVIDIA GPU chip with enclosed EK-TIM Ectotherm thermal grease. EKWB recommends to apply thermal grease in cross form for best performance (see sample picture).

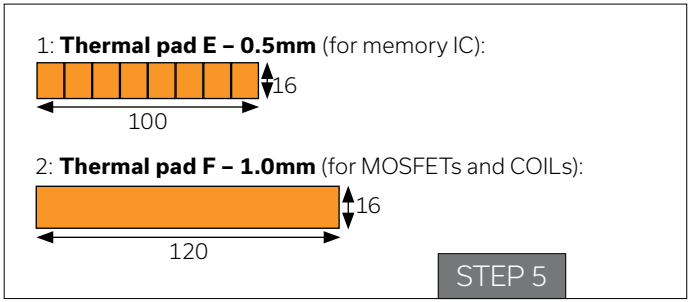

STEP 5
CUTTING THERMAL PADS

Your block comes with thermal pads, some of which are already pre-cut. Others have to be cut to smaller chunks in order to cover all the VRM components such as COILs, MOSFETs and drivers. PLEASE REMOVE THE PROTECTIVE FOIL FROM BOTH SIDES OF THE THERMAL PADS PRIOR TO INSTALLATION.

Replacement thermal pads:
Thermal Pad E – 0.5mm (RAM 8x) – (EAN: 3830046996688)
Thermal PAD F 1,0mm - (120x16mm) – (EAN:3830046996732)

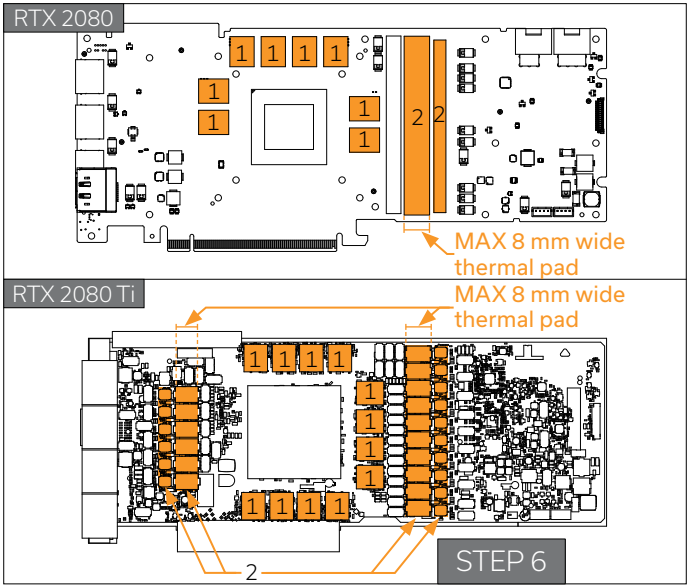

STEP 6
PLACING THERMAL PADS ON PCB

Place thermal pads on the circuit board as shown on the picture below. Refer to numbering in previous picture when applying thermal pads of different sizes or thicknesses. EK made sure to provide customers with more than adequate quantity of thermal pads to complete this step.

INSTALLING THE WATER BLOCK FOR RTX 2080 / RTX 2080 TI GRAPHIC CARD

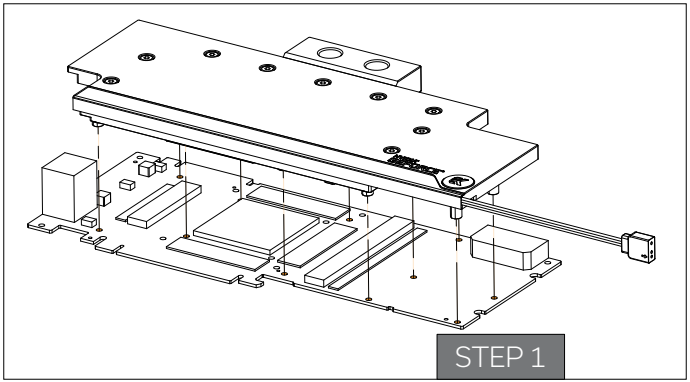

STEP 1
PLACING THE BLOCK ON TO THE GRAPHICS CARD

Carefully position the water block with preinstalled standoffs on to the graphics card. During this process please make sure you align mounting holes on the PCB with holes on the water block (same applies for other tops). Also pay attention not to use too much force by pressing the block down to the PCB. Chip dies are prone to cracking. Procedure is the same for all Full Cover water blocks.

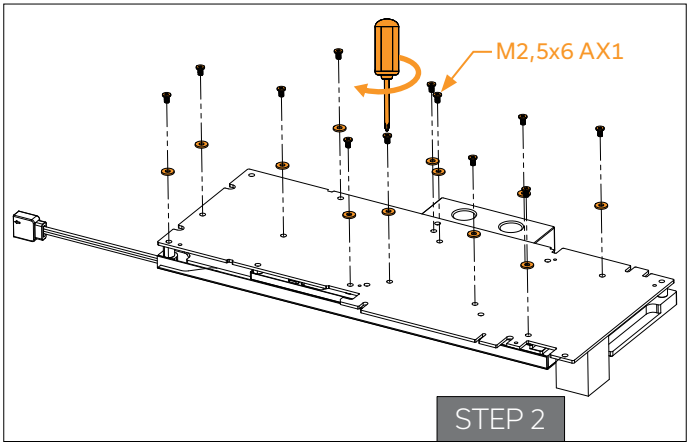

STEP 2
ATTACHING THE BLOCK TO THE GRAPHIC CARD

Use a Philips screwdriver screw with the enclosed M2,5x4 AX1 screws. EKWB recommends users to start tightening the screws around the GPU core and continue outwards. Always use a plastic washer under each and every screw! If the washer is already present on the circuit board (usually around the four GPU core screw holes) there is no need for additional washer.

In this step you will need:

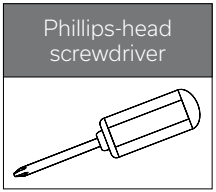

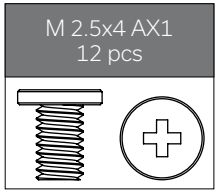

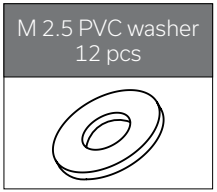

CHECKING FOR CONTACTS

If necessary temporarily remove the water block to check for uniform surface contact between the block and the components, pay special attention to the VRM section of the graphics card. Check whether the water block makes contact with the intended integrated circuit. Then repeat sub-steps in previous section to re-attach the block.
In case you fail to obtain good contact, please check again that your thermal pad thickness or contact our support service at http://www.ekwb.com/support.

INSTALLATION OF FITTINGS AND TUBING

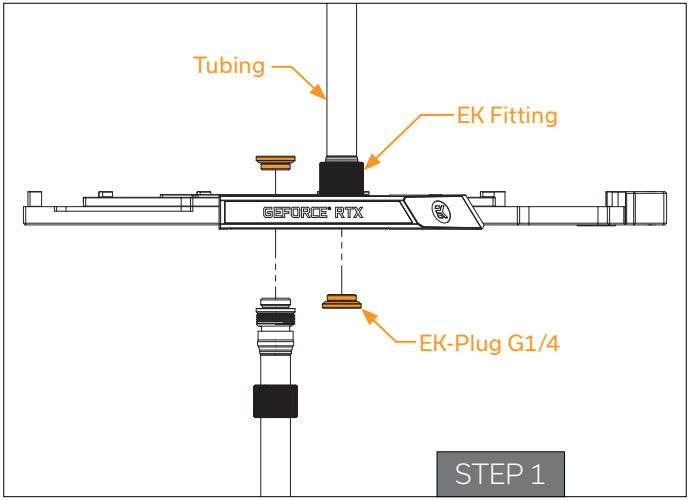

Screw in the two G1/4 threaded male fittings. Attach the liquid cooling tubes and connect the water-block(s) into the cooling circuit. **EKWB recommends using EK fittings with this water block.** To ensure that the tubes are securely attached to the barb/fittings, please use hose clamps or an appropriate substitute.

You can use any opening as an inlet/outlet port. Do not forget to plug the remaining two opening with enclosed EK-Plug G1/4 or equivalent.

CAUTION: In case of using connectors other than EK series compression fittings, take special attention to the length of the fittings' male G1/4" thread. 5mm is the maximum allowed G1/4" thread length!

INSERTING THE CARD IN YOUR PC CASE

Carefully lift your graphics card with installed block and insert it in your PC's motherboard PCI-express expansion slot. Please bear in mind that your graphics card is probably heavier than when it was equipped with original heat sink fan assembly. One needs to be very careful when handling the graphics card. Avoid all un-needed manipulation of the VGA/water block assembly that might damage your card or water block during final installation.

REQUIRED TOOLS

Phillips-head screwdriver	Scissors
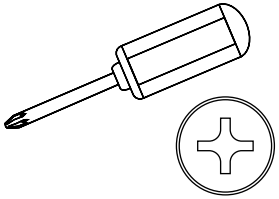	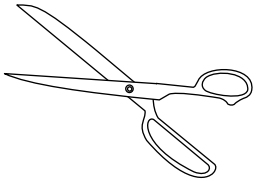

CONNECTING THE D-RGB LED STRIP

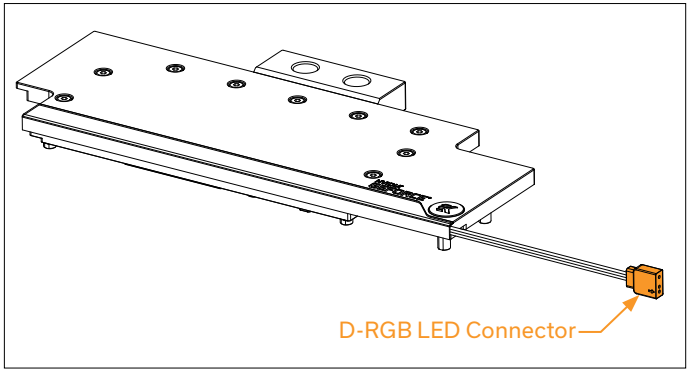

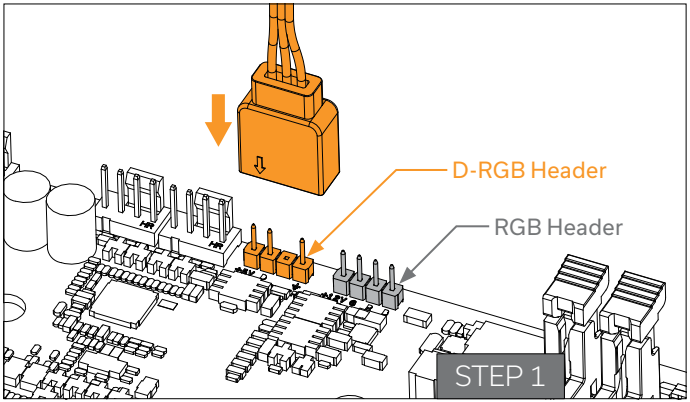

STEP 1

Plug in the 3-pin D-RGB connector from your GPU Water Block to a D-RGB header on your motherboard or controller. The LED Strip will only work if the pin layout on the header is as follows: **+5V, Digital, Empty, Ground**.

> ⚠ Incorrect installation or installation to the incorrect header may result in damage to the LED Strip or header!

SUPPORT AND SERVICE

For assistance please contact:
http://support.ekwb.com/

EKWB d.o.o.
Pod lipami 18
1218 Komenda
Slovenia - EU

SOCIAL MEDIA

EKWaterBlocks

@EKWaterBlocks

ekwaterblocks

EKWBofficial

ekwaterblocks