WL70-440BL11

Neomounts by Newstar WL70-440BL11 full motion wall mount for 17-32" screens - Black

NEOMOUNTS BY NEWSTAR TV WALL MOUNT

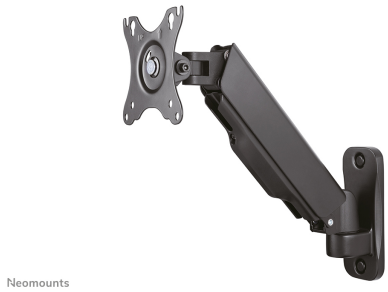

SPECIFICATIONS

GENERAL

Distance to wall	9-38 cm
Max. screen size*	32
Max. weight	9
Min. screen size*	17
Min. weight	2
Screens	1
VESA maximum	100x100
VESA minimum	75x75
VESA pattern	100x100
	75x75

FUNCTIONALITY

Adjustment type	Gas spring
Height	32,1 cm
Height adjustment	0-25 cm
Rotate (degrees)	360°
Swivel (degrees)	180°
Tilt (degrees)	+90°, -45°
Type	Full motion
	Tilt
	Rotate
	Swivel
Width	11,7 cm

INFORMATION

Color	Black
Warranty	5 year
EAN code	8717371449117

*Please note: The inch sizes stated are just an indication, combined with the weight and VESA sizes. The maximum weight and VESA size are absolute restrictions for the products and should not be exceeded.

The Neomounts by Newstar WL70-440BL11 is a full motion wall mount for flat screens up to 32" with a maximum weight capacity of 9 kg. The versatile tilt (135°), rotate (360°) and swivel (180°) technology allows you to create the optimum viewing angle.

The WL70-440BL11 has a depth of 9-38 cm and is suitable for screens that meet VESA hole pattern 75x75 to 100x100 mm.

The mount can be easily adjusted in height using the gas spring. The cable management system allows you to route and secure any loose cables at the back of the screen. Additionally, the mount features an Easy-release VESA, that allows you to attach the TV in a wink of an eye.

Neomounts BY NEWSTAR
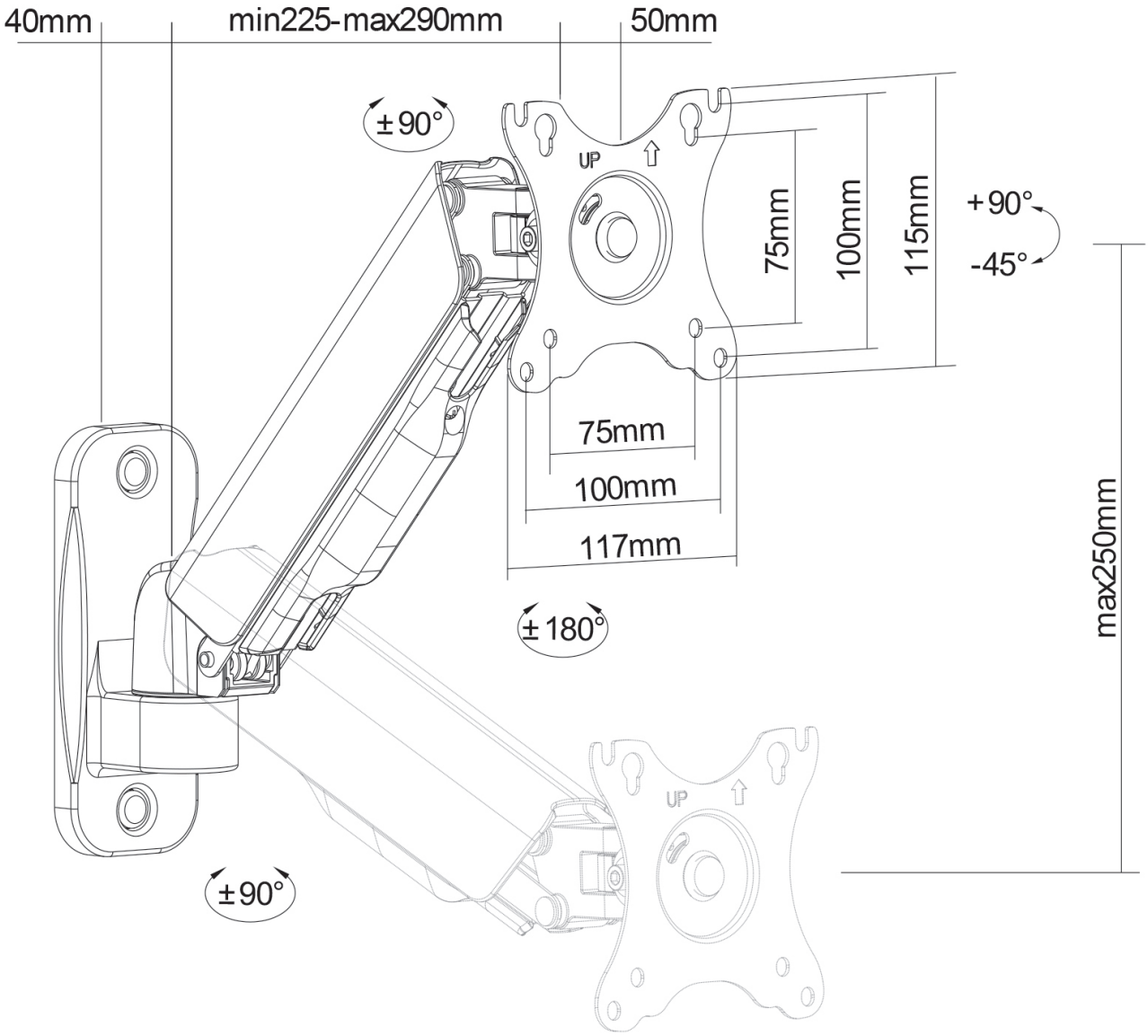
WL70-440BL11 **NEOMOUNTS BY NEWSTAR TV WALL MOUNT**