LEICA M10-D

Instruction manual

FOREWORD

Dear Customer,
We wish you a great deal of fun and success taking photographs with your new Leica M10-D. Please read this manual thoroughly to ensure that you familiarize yourself with the full scope of functions your camera has to offer.

Your Leica Camera AG

SCOPE OF DELIVERY

Before using your camera for the first time, please check the accessories* for completeness.

- Leica M10-D
- Camera bayonet cover
- Cover for accessory shoe
- Lithium ion battery Leica BP-SCL5
- Battery charger Leica BC-SCL5, incl. mains cable and in-car charger cable
- Carry strap
- Drawstring pouch for battery, charger and cables
- Quick Start Guide
- Test certificate
- Registration card

* Subject to change with regard to construction and appearance.

REPLACEMENT PARTS/ACCESSORIES

Please visit the Leica Camera AG website for information on the extensive range of Leica replacement parts/accessories:
us.leica-camera.com/Photography/Leica-M/Technical-Equipment

Only the accessories specified and described in this manual or by Leica Camera AG must be used with the camera (battery, charger, mains plug, mains cable, etc.). These accessories should only be used with this product. Third-party accessories may result in malfunctions or damage to the product.

Please read the chapters “Legal information”, “Safety remarks”, and “General information” before using your camera for the first time. Knowledge of the content will prevent inadvertent damage to the product, possible injuries and other risks.

LEGAL NOTES

LEGAL NOTES

- Compliance with copyright laws is mandatory. The recording and publication of pre-recorded media like tapes, CDs or other published or broadcast material may breach copyright laws.

REGULATORY INFORMATION

You will find the manufacturing date of your camera on the stickers in the Warranty Card and/or on the packaging.
The date format is year/month/day.

English

Declaration of Conformity (DoC)
Hereby, *"Leica Camera AG"* declares that this product is in compliance with the essential requirements and other relevant provisions of Directive 2014/53/EU.
Customers can download a copy of the original DoC to our RE products from our DoC server:
www.cert.leica-camera.com
In case of further questions, please contact:
Leica Camera AG, Am Leitz-Park 5, 35578 Wetzlar, Germany

Wireless transmitter:
Frequency range used:
2412 MHz to 2462 MHz (Central frequency - WLAN)
2402 MHz to 2480 MHz (Central frequency - Bluetooth® wireless technology)
Max. output power: 20 dBm (EIRP)

The CE mark on our products documents compliance with the fundamental requirements of applicable EU directives.

DISPOSAL OF ELECTRIC AND ELECTRONIC EQUIPMENT

(Applies within the EU and for other European countries with active waste separation policies.)

This device contains electric and/or electronic components which must not be disposed of in general household waste. Instead, it should be disposed of at a recycling collection point provided by your local authority.
This service is free of charge. Any standard or rechargeable batteries used in this device must be removed and disposed of separately in accordance with local regulations.
Please contact your local authorities, waste disposal collection point or the retailer, from whom you purchased the device for more information on correct waste disposal.

IMPORTANT NOTES REGARDING THE USE OF GPS

This function is available only with the Leica Visoflex viewfinder attached (optional accessory).

Legal restrictions on use

- The use of GPS and associated technologies may be restricted in some countries or regions.
- You should therefore contact your travel agent or the embassy of your destination country for relevant information beforehand.
- The People's Republic of China and Cuba (exceptions: Hong Kong and Macao) prohibit the use of GPS within their territories and in the vicinity of their borders.
- Violations will be prosecuted by local authorities. The GPS function is therefore automatically deactivated in these areas.

Notes on function

- Prerequisite for GPS triangulation (geolocation) is “Line of Sight” (LoS) to at least 3 GPS satellites (up to 9 of the total 24 GPS satellites are available from any point on Earth at all times). The camera should therefore always be held with the GPS antenna pointing straight upwards.
- Make sure not to cover the GPS antenna with your hand or any object (specifically metallic objects).
- Perfect signal reception from GPS satellites may be impossible in the following locations or under the circumstances listed below. Geolocation may then be impossible or erratic at best.
  - in enclosed spaces
  - underground
  - under trees
  - in a moving vehicle
  - in the vicinity of tall buildings or in narrow valleys
  - in the vicinity of high-voltage lines
  - in tunnels
  - in the vicinity of mobile phones
  - with an accessory attached to the flash shoe, e.g. a flash unit
- We recommend recommissioning the GPS function in a location with good signal reception if the camera has not been used for an extended period of time.

Notes on safe use

The electromagnetic radiation generated by the GPS system may affect electronic instruments and measuring devices. Make sure to disable the GPS function on board an aircraft before takeoff or landing, in hospitals and other locations where RF restrictions apply.

IMPORTANT NOTES REGARDING THE USE OF WLAN

- Appropriate measures must be taken to ensure security and protect against disruptions to the systems in place where devices or computer systems are in use that require more stringent security than WLAN devices.
- Leica Camera AG shall not accept liability for damages arising from the use of the camera for purposes other than as a WLAN device.
- It is assumed that the WLAN function will be used in countries where this camera is sold. There may be a risk of breaching statutory wireless communication regulations when using the camera in other countries. Leica Camera AG shall not accept liability for such breaches.
- Please note that there is a risk of unauthorized third party interception of wirelessly communicated data. We highly recommend that you activate encryption in the wireless access point settings to ensure data safety.
- Avoid using the camera in areas where it can be exposed to magnetic fields, static electricity or other interferences, e.g. near a microwave oven. RF transmissions may otherwise not reach the camera.
- Using the camera near devices like microwave ovens or wireless phones that use the 2.4 GHz RF band may negatively affect the performance of both devices.
- Do not attempt to connect to wireless networks you are not authorized to use.
- The device will automatically search for wireless networks, once the WLAN function is enabled. A list of network SSIDs, including networks you are not authorized to access, will be displayed (SSID: Network identifier for a WLAN connection). Do not attempt to connect to such a network, as this could be construed as unauthorized access.
- We recommend disabling the WLAN function while on an aircraft.

SAFETY REMARKS

GENERAL INFORMATION

- Do not use your camera in the immediate vicinity of devices that generate powerful magnetic, electrostatic or electromagnetic fields (e.g. induction ovens, microwave ovens, television sets or computer screens, video game consoles, cell phones, broadcasting equipment). Their electromagnetic fields can interfere with recordings.
- Strong magnetic fields, e.g. from speakers or large electric motors, can damage the stored picture data or disrupt recording.
- Switch off the camera, remove the battery and switch the camera back on in case of a camera malfunction due to the effects of electromagnetic fields.
- Do not use the camera in the immediate vicinity of radio transmitters or high-voltage power lines. Their electromagnetic fields may interfere with recordings.
- Always store small parts e.g. the accessory shoe cover as follows:
  - out of the reach of children
  - in a safe location, where they will not get lost or stolen
- State-of-the-art electronic components are sensitive to static discharge. You can easily pick up charges of several 10,000 volts by simply walking on synthetic floor coverings. A static discharge can occur when you touch the camera and especially if it is placed on a conductive surface. A static discharge on the camera housing poses no risk for the electronics. Despite built-in safety circuits, you should avoid direct contact with external camera contacts like those in the flash shoe.
- Take care not to soil or scratch the sensor for lens detection in the bayonet. You must similarly prevent direct contact of the bayonet with grains of sand or similar particles, as these could cause irreparable damage. This component must only be cleaned with a dry cloth.
- Use a cotton or linen cloth instead of a microfiber cloth from an optician's (synthetic) when cleaning the contacts. Make sure to discharge any electrostatic charge by deliberately touching a heating or water pipe (conductive, grounded material). Dirt deposits and oxidation on the contacts can be avoided by storing your camera in a dry location with the lens cap attached and all covers in place.
- Only use accessories specified for this model to prevent faults, short circuits or electric shock.
- Do not attempt to remove parts of the housing (covers) yourself. Repairs must be done at authorized service centers only.
- Protect the camera against contact with insect sprays and other aggressive chemicals. Petroleum spirit, thinner and alcohol must not be used for cleaning. Some chemicals and liquids can damage the camera housing or the surface finish.
- Rubber and plastics are known to expel aggressive chemicals and should therefore not be kept in contact with the camera for extended periods of time.
- Prevent any sand, dust or water penetrating the camera, e.g. during snowfall or rain or on the beach. Be extra careful when changing the lens and inserting or removing the memory card and battery. Sand and dust can damage the camera, the lens, the memory card and the battery. Moisture can cause malfunctions and irreparable damage to the camera and memory card.

LENS

- A camera lens can have the effect of a magnifying glass when exposed to direct frontal sunlight. The camera must therefore be protected against extended exposure to direct sunlight.
- Attaching the lens cap and keeping the camera in the shade or ideally in its camera case, will help prevent damage to the interior of the camera.

RECHARGEABLE BATTERY

- Improper use of the batteries or the use of unapproved battery types may result in an explosion!
- Do not expose the rechargeable battery to sunlight, heat, humidity or moisture for prolonged periods of time. Likewise, the batteries must not be placed in a microwave oven or a high-pressure container as this would pose a fire or explosion hazard.
- Do not under any circumstances charge or insert a damp or wet battery!
- A safety valve in the battery ensures that any excess pressure caused by improper handling is discharged safely. It is nevertheless important to dispose of a bloated battery immediately. It may pose an explosion hazard!
- Keep the battery contacts clean and easily accessible. Although lithium-ion batteries are secured against short circuits, they should still be protected against contact with metal objects like paper clips or jewelry. A short-circuited battery can get very hot and cause severe burns.
- When a battery is accidentally dropped, make sure to check the housing and the contacts immediately for any damage. A damaged battery can damage the camera.
- The battery must be removed from the camera or charger and must be replaced immediately in case of a strange smell, discoloration, deformation, overheating or leakage. Continued use of the battery may result in overheating, which can cause fire and/or explosion!
- Never throw batteries into a fire as they may explode.
- Keep the battery away from sources of heat in case of leakage or if you smell burning. Leaked fluid can catch fire!
- The use of other chargers not approved by Leica Camera AG can cause damage to the batteries – and in extreme cases – cause serious or life-threatening injuries.
- Make sure that the power socket is freely accessible at all times.
- The in-car charging cable must never be connected while the charger is connected to mains electricity.
- Do not attempt to open the battery or the charger. Repairs must be carried out by authorized service centers only.
- Keep batteries out of the reach of children. Batteries can cause suffocation when swallowed.

FIRST AID

- Battery fluid may cause blindness if it comes into contact with the eyes. Rinse the eyes thoroughly with clean water immediately. Avoid rubbing. Seek medical attention immediately.
- Leaked battery fluid poses an injury hazard when it comes in contact with clothing or skin. Rinse the affected areas thoroughly with clean water.

CHARGER

- Using the charger in the vicinity of broadcasting receivers may interfere with reception. Ensure a distance of at least 1 m (3 ft) between the charger and the receiver.
- When the charger is in use, it may emit a buzzing sound – this is normal and not a malfunction.
- Disconnect the charger from the mains when it is not in use, as it consumes electricity (a very small amount), even if no battery is inserted.
- Always keep the charger contacts clean, and never short circuit them.
- The in-car charging cable must only be operated in 12V in-car grids and must never be connected while the charger is connected to mains electricity.

MEMORY CARD

- Never remove the memory card during a datasave or card reading process. The camera must not be switched off or be subjected to impact or vibrations while working.
- Do not open the cover/remove the memory card or the battery while the status LED is lit, which indicates memory access. Data on the card may otherwise be destroyed and camera malfunctions may occur.
- Do not drop or bend memory cards as this will cause damage and result in the loss of stored data.
- Do not touch the connections on the reverse of the memory card and keep them clean and dry.
- Keep memory cards out of the reach of children. Swallowing a memory card may cause suffocation.

SENSOR

Cosmic radiation (e.g. during flights) may cause pixel defects.

CARRY STRAP

- Carry straps are usually made of very robust material. You should therefore keep it out of the reach of children. A carry strap is not a toy and poses a strangulation risk.
- Use the carry strap only for its intended purpose on a camera or on binoculars. Any other use poses the risk of injury and may result in damage to the carry strap and is therefore not permitted.
- Carry straps should also not be used for cameras/binoculars during sports activities that pose a risk of entanglement (e.g. mountain climbing and similar outdoor activities).

Please read the section about “Care/Maintenance” for more information about what to do in case of problems.

GENERAL NOTES

CAMERA/LENS

- Make a note of the serial numbers of your camera (engraved in the base of the camera housing) and lenses, as this information will be extremely important in case of loss.
- Make sure to always have a lens or the camera bayonet cover attached to prevent dust or other foreign bodies penetrating the camera.
- That is why you should always replace lenses quickly and in a dust-free environment.
- Never store the camera bayonet cover or the rear lens cover in a pants pocket, as they will attract lint and dust, which could then be accidentally introduced into the camera.
- Leica releases firmware updates for lenses at irregular intervals. You can download new firmware versions from our homepage and transfer it to your lens. Please read the section “Installing firmware updates” (p. <?>) for more information.

RECHARGEABLE BATTERY

- The battery must have a temperature between + 10°C and + 30°C for charging, as the charger will otherwise not switch on or will switch off again.
- Lithium-ion batteries can be charged at any time, regardless of their current charge level. A partially charged battery will charge to full capacity faster than a fully discharged one.
- The rechargeable batteries come only partly charged ex works and should therefore be charged fully before their first use.
- A new battery only reaches its full capacity after it has been fully charged and – by using it in the camera – depleted 2 to 3 times. This depletion process should be repeated roughly every 25 cycles.
- Battery and charger heat up during the charging process. That is normal and not a malfunction.
- Rapid flashing of the two LEDs (> 2 Hz) when charging commences indicates a charging error (e.g. maximum charging time exceeded, voltages or temperatures outside permitted ranges or a short circuit). Disconnect the charger from the mains and remove the battery. Ensure that the above temperature conditions are met and then restart the charging process. Please contact your dealer, the Leica representative in your region or Leica Camera AG if the problem persists.
- Rechargeable lithium-ion batteries generate power by way of internal chemical reactions. These reactions are influenced by ambient temperature and humidity. To ensure a maximum service life of the battery, it should not be exposed to extreme temperatures (high or low) for extended periods of time (e.g. in a parked car in the summer or winter).
- However, every battery has a limited service life! After several hundred charging cycles, this limitation will become evident as the operating times get significantly shorter.

- The replaceable battery supplies power to a backup battery, which is permanently installed in the camera. This backup battery retains the date and time for up to 2 months. Once the backup battery is depleted, it must be replenished by inserting a charged main battery. The backup battery will recover its full capacity after approx. 60 hours with the rechargeable battery in place. The camera does not have to be switched on for the process. The time and date will have to be set again after a full depletion of the backup battery.
- Warning messages may be displayed and some camera functions may be restricted or blocked entirely as the battery charge level decreases.
- Always remove the battery if the camera will not be used for an extended period of time. Make sure to switch the camera off via the main switch before removing the battery. Leaving the battery in the camera will result in a deep discharge after a few weeks. Voltage levels will decrease significantly, as the camera uses a low idle current to maintain settings.
- Dispose of damaged batteries in accordance with the relevant regulations at an approved collection point for proper recycling.
- The date of manufacture can be found on the battery. The date format is week/year.

MEMORY CARD

- The range of available SD/SDHC/SDXC cards on the market is too extensive for Leica Camera AG to test for compatibility and quality. Generally, any type of memory card may be used without any damage to the camera or memory card. As some "no name" cards may not fully comply with the SD/SDHC/SDXC standards, Leica Camera AG cannot provide any guarantee of function.
- We recommend formatting memory cards from time to time, as fragmented residual data from deleted files may block some of the storage capacity.
- We recommend backing up your data on a PC, because electromagnetic fields, static electricity and any damage to the memory card or camera defects may result in irretrievable damage or loss of your data.
- SD, SDHC, and SDXC memory cards come with a write protection slider to prevent accidental overwriting. This slider is located on the non-beveled side of the card. All data on the card is protected when the slider is set to its lower position, marked LOCK.

SENSOR

- Any dust or dirt particles stuck to the glass cover of the sensor may result in noticeable dark stains or specks on the pictures.

DATA

- All data, including personal information, may be changed or deleted due to incorrect or accidental operation, static discharge, accidents, malfunctions, repairs and other measures.
- Please note that Leica Camera AG does accept liability for direct or consequential damage due to the manipulation or destruction of data and personal information.

FIRMWARE UPDATE

Leica is continuously working on the further development and optimization of Leica M10-D. As digital cameras have many functions that are controlled electronically, improvements and enhancements to the functions can be installed on the camera at a later date. Leica releases so-called firmware updates at irregular intervals. Cameras are always supplied ex works with the latest firmware installed or you can download the latest version from our website yourself and transfer it to your camera.
You will receive a newsletter informing you of the availability of a new firmware update if you register your camera on the Leica Camera homepage.
Visit the download section or the "Customer Area" for information about how to register or how to get firmware updates for your Leica M10-D. Additionally, you can find information about changes or additions to the manual at:
https://owners.leica-camera.com

Definition of the various categories of information found in this manual

Note
Additional information

Important
Failure to comply with instructions may result in damage to the camera, the accessories or the pictures

Attention
Non-compliance may result in personal injury

PART DESIGNATIONS

CAMERA

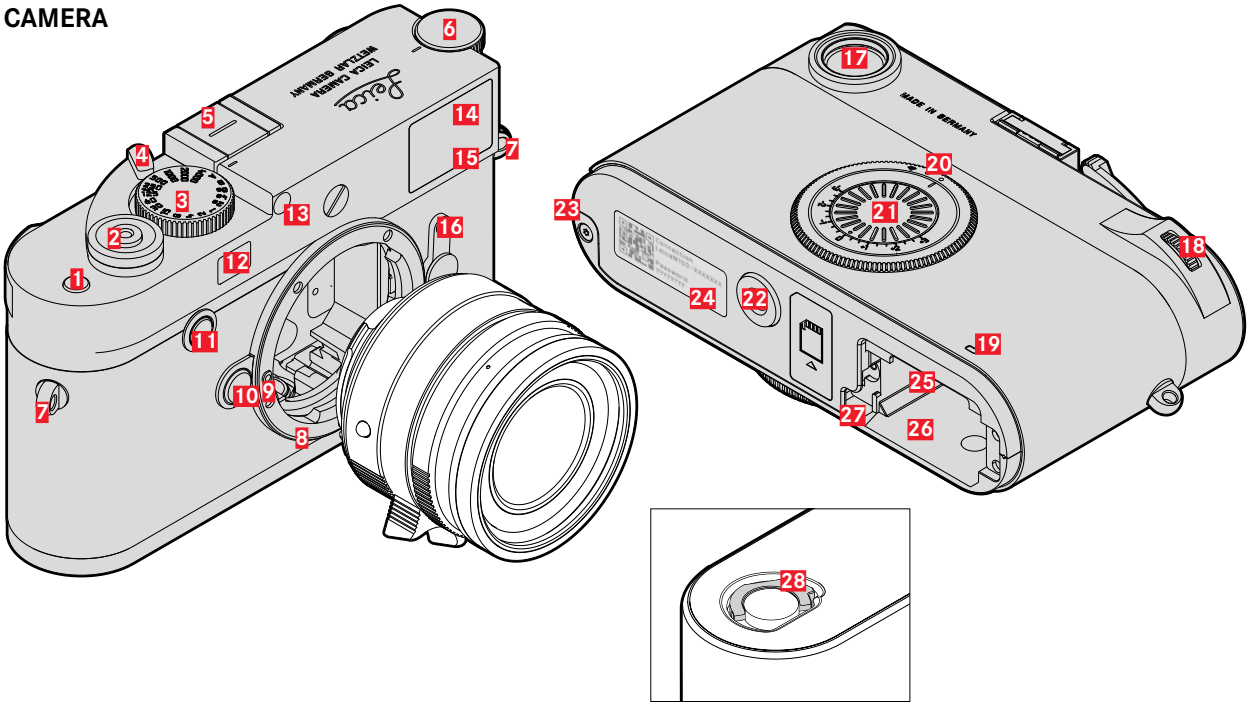

1 Function button
2 Shutter button
3 Shutter speed setting wheel with stop positions
4 Integrated thumb rest
5 Accessory shoe
6 ISO setting wheel
7 Strap lugs
8 6-bit encoding
9 Bayonet
10 Lens release button
11 Focus button
12 Rangefinder window
13 Brightness sensor
14 Self-timer LED
15 Viewfinder window
16 Image field selector
17 Viewfinder eyepiece
18 Thumbwheel
19 LED
20 Main switch
21 Exposure compensation focusing screen
22 Tripod thread A ¼, DIN 4503 (¼")
23 Bottom cover locking point
24 WLAN access data for app control via QR code for easy pairing
25 Memory card slot
26 Battery compartment
27 Battery locking latch
28 Locking toggle for bottom cover

1 Leica M lenses with viewfinder attachment cover the brightness sensor. Please read the sections "Displays (viewfinder)" and "Leica M lenses" for more information about how to work with these and other lenses.

LENS

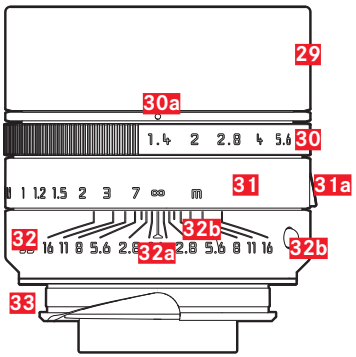

29 Lens hood
30 Aperture setting ring with scale
a Index for exposure values
31 Focus ring
a Focus tab
32 Fixed ring
a Focusing index
b Depth of field scale
c Alignment button for lens replacement
33 6-bit encoding (sensor for lens detection)

*Representative image. Technical features may vary depending on model.

DISPLAYS

VIEWFINDER

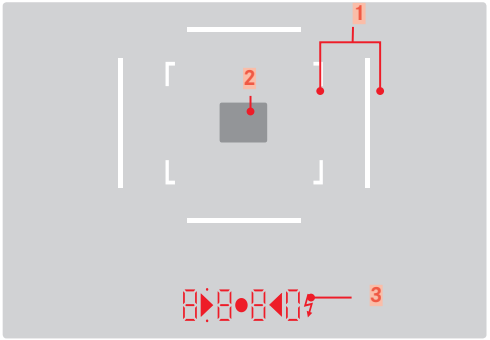

1 Bright-line frame (e.g. 50mm + 75mm)

2 Metering field for focusing

3 Digital display

a. 8 8 8 0:
- Displays the automatically calculated shutter speed in aperture priority mode **A** or the countdown of longer shutter speeds in 1 s increments.
- Warning that the metering or setting ranges are overshot or undershot using aperture priority mode **A**
- Exposure compensation value (appears for a short time during setting and for about 0.5 s when activating exposure metering by tapping the shutter button)
- Notification for (temporarily) full cache
- Message: No memory card (Sd)
- Message: Memory card full (Full)
- Number of remaining exposures

b. • (top):
- Indicates (when lit) that the metering memory lock is active
- Battery capacity

c. • (bottom):
- Indicates (flashing) that exposure compensation is in use

d. ▶ • ◀:
- For manual exposure setting: Concurrently as light balance for exposure compensation. The triangular LEDs give the direction of rotation of the aperture setting ring and shutter speed setting wheel to adjust the exposure.
- Warning before the measuring range is undercut

e. ϟ Flash symbol:
- Flash ready to use
- Details of flash exposure before and after exposure

VISOFLEX

(optional accessory)

WHEN TAKING A PICTURE

(All displays/values refer to actual settings)

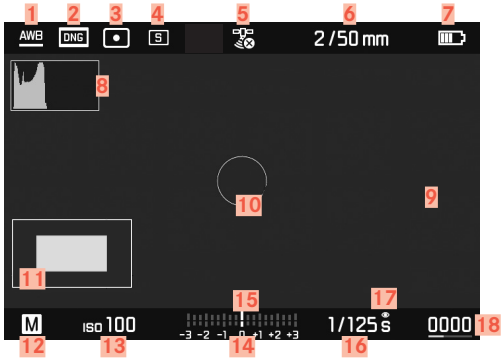

1 White balance mode
2 File format/compression level/resolution
3 Exposure metering method
4 Shutter button/Drive mode
5 GPS
6 Light intensity/focal length or lens type
7 Battery capacity
8 Histogram
9 Identification of in focus edges in the subject (Focus peaking)
10 Spot exposure metering field (only if the metering method is switched on)
11 ■ Display of cropped section size and position (only visible for enlarged sections)
12 Exposure mode
13 ISO Sensitivity
14 Light balance
15 Exposure compensation scale
16 Shutter speed
17 Exposure simulation
18 Remaining number of exposures incl. trend detection via bar chart

TABLE OF CONTENTS

FOREWORD 2
SCOPE OF DELIVERY 2
REPLACEMENT PARTS/ACCESSORIES 3
LEGAL NOTES 4
LEGAL NOTES 4
REGULATORY INFORMATION 4
DISPOSAL OF ELECTRIC AND ELECTRONIC EQUIPMENT 4
IMPORTANT NOTES REGARDING THE USE OF GPS 5
IMPORTANT NOTES REGARDING THE USE OF WLAN 6
SAFETY REMARKS 7
GENERAL INFORMATION 7
LENS 8
RECHARGEABLE BATTERY 8
FIRST AID 8
CHARGER 9
MEMORY CARD 9
SENSOR 9
CARRY STRAP 9
GENERAL NOTES 10
CAMERA/LENS 10
RECHARGEABLE BATTERY 10
MEMORY CARD 11
SENSOR 12
DATA 12
FIRMWARE UPDATE 12
PART DESIGNATIONS 14
CAMERA 14
LENS 15
DISPLAYS 16
VIEWFINDER 16
VISOFLEX 17
WHEN TAKING A PICTURE 17
PREPARATION 22
ATTACHING THE CARRY STRAP 22
PREPARING THE CHARGER 22
CHARGING THE BATTERY 23
INSERTING THE BATTERY IN THE CHARGER 23
CHARGE STATUS DISPLAYS ON THE CHARGER 23
INSERTING/REMOVING THE BATTERY 24
CHARGE STATUS DISPLAY IN THE VIEWFINDER 25
CHARGE STATUS DISPLAY IN THE VISOFLEX 25
MEMORY CARD INSERTION/REMOVAL 26
COMPATIBLE LENSES 27
LEICA M LENSES 27
COMPATIBLE LEICA LENSES WITH ADAPTER 27
LENSES WITH LIMITED COMPATIBILITY 28
COMPATIBLE, BUT MAY POSE RISK OF DAMAGE TO THE CAMERA AND/OR LENS 28
COMPATIBLE, BUT EXACT FOCUSING MAY BE LIMITED 28
USABLE, BUT EXPOSURE METERING IS POSSIBLE ONLY IN LIVE VIEW MODE 28
INCOMPATIBLE LENSES 28
ATTACHING/DETACHING THE LENS 29
CAMERA OPERATION 30
OPERATING ELEMENTS 30

MAIN SWITCH ... 30
SHUTTER SPEED SETTING WHEEL ... 32
ISO SETTING WHEEL ... 32
THUMBWHEEL ... 33
FOCUS BUTTON ... 33
FUNCTION BUTTON ... 33

CAMERA DEFAULT SETTINGS ... 34

MENU LANGUAGE ... 34

SETTING THE DATE AND TIME ... 34
AUTOMATIC TIME VIA GPS ... 35

AUTO POWER SAVING (STANDBY MODE) ... 35

VIEWFINDER SETTINGS ... 36
BRIGHTNESS ... 36
INFORMATION DISPLAYS ... 36

BASIC PICTURE SETTINGS ... 38

FILE FORMAT ... 38

IMAGE PROPERTIES ... 38
JPG RESOLUTION ... 38
JEPG SETTINGS ... 39

LENS DETECTION ... 40
USING A LEICA M LENS WITH 6-BIT ENCODING ... 40
USING A LEICA M LENS WITHOUT 6-BIT ENCODING ... 40
USING A LEICA R LENS ... 41

PICTURE MODE ... 42

IMAGE TYPES ... 42
USING THE RANGEFINDER ... 42
LIVE VIEW MODE ... 44

FOCUSING ... 44
FOCUS METERING METHODS USING THE RANGEFINDER ... 44
FOCUS METERING METHODS IN LIVE VIEW MODE ... 45
ASSIST FUNCTIONS FOR MANUAL FOCUSING IN LIVE VIEW MODE ... 46

ISO SENSITIVITY ... 48

WHITE BALANCE ... 49

EXPOSURE ... 49
EXPOSURE METERING METHODS ... 49
EXPOSURE SETTING ... 51
EXPOSURE CONTROL/FUNCTIONS WITH AUTOMATIC EXPOSURE ... 52
AUXILIARY DISPLAYS ... 55
SERIAL EXPOSURES ... 56
SELF-TIMER ... 56

FLASH PHOTOGRAPHY ... 57
COMPATIBLE FLASH UNITS ... 57
ATTACHING THE FLASH UNIT ... 57
FLASH EXPOSURE METERING (TTL METERING) ... 58
FLASH MODES ... 59
FLASH CONTROL ... 60
FLASH EXPOSURE COMPENSATION ... 61
FLASH EXPOSURE DISPLAYS IN THE VIEWFINDER (system-compatible flash units) ... 61

REVIEW MODE ... 62
AUTOMATIC REVIEW OF THE MOST RECENT PICTURE TAKEN IN VISOFLEX ... 62

OTHER FUNCTIONS ... 63

DATA MANAGEMENT ... 63
DATA STRUCTURE ON THE MEMORY CARD ... 63

RECORDING THE IMAGE LOCATION WITH GPS ... 64

DATA TRANSFER ... 64

USING RAW DATA (DNG) ... 64

RESETTING THE CAMERA TO FACTORY SETTINGS ... 64
FIRMWARE UPDATE ... 65
REMOTE CAMERA CONTROL ... 65
LEICA FOTOS APP ... 65
CARE/STORAGE ... 66
CAMERA HOUSING ... 66
LENS ... 66
VIEWFINDER ... 67
RECHARGEABLE BATTERY ... 67
MEMORY CARDS ... 67
SENSOR ... 68
SENSOR CLEANING ... 68
FAQ ... 70
FACTORY SETTING ... 71
KEYWORD INDEX ... 72
TECHNICAL DATA ... 74
LEICA CUSTOMER CARE ... 77

PREPARATION

ATTACHING THE CARRY STRAP

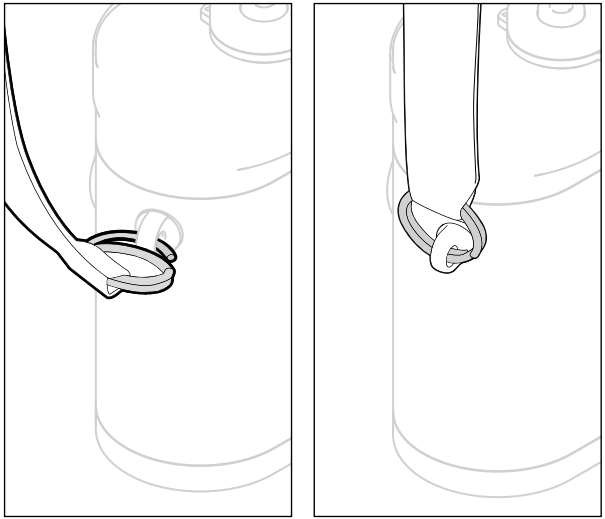

Attention
Once you have attached the carry strap, please make sure that the clips are mounted correctly to prevent the camera from falling.

PREPARING THE CHARGER

Use the mains cable with the matching regional plug to connect the charger to mains electricity.

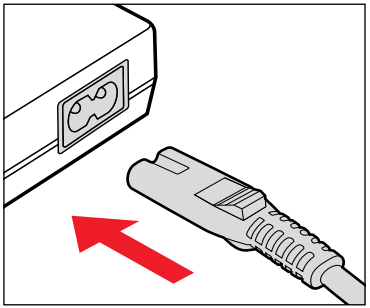

Note
The charger will automatically adapt to local mains voltage.

CHARGING THE BATTERY

The camera is powered by a lithium-ion battery.

INSERTING THE BATTERY IN THE CHARGER

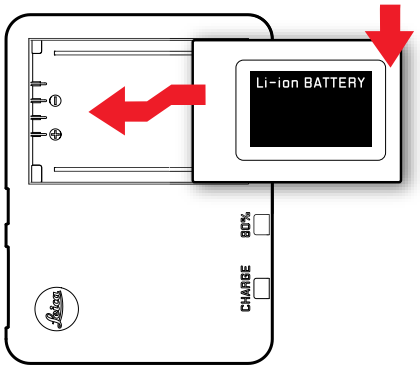

CHARGE STATUS DISPLAYS ON THE CHARGER

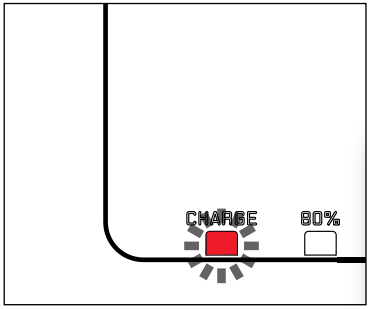

The status LED indicates a correct charging process.

Display	Charge status	Charge time*
CHARGE flashes green	battery is charging	
80% lights up orange	80%	approx. 2 h
CHARGE continuous green light	100%	approx. 3½ h

Disconnect the charger from mains electricity when the charging process is complete. There is no risk of overcharging.

* for a completely discharged battery.

INSERTING/REMOVING THE BATTERY

Ensure that the camera is switched OFF (see p. 30)

OPENING THE BOTTOM COVER

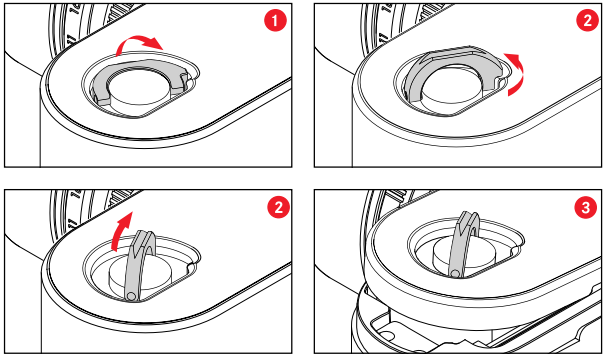

- Click down the locking toggle
- Turn the locking toggle counter-clockwise
- Lift the bottom cover

CLOSING THE BOTTOM COVER

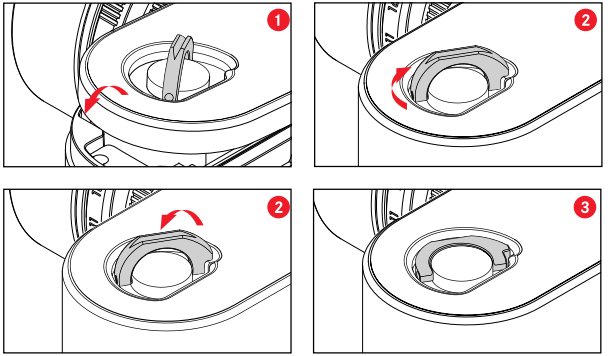

- Insert the bottom cover (Fig. 1)
- Turn the locking toggle in clockwise direction
- Click down the locking toggle
- Check that the bottom cover was inserted and closed correctly

INSERTION

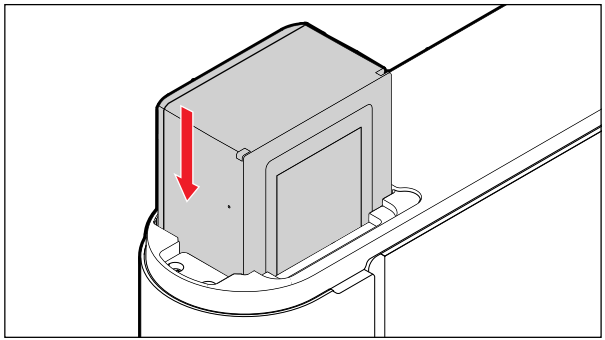

REMOVAL

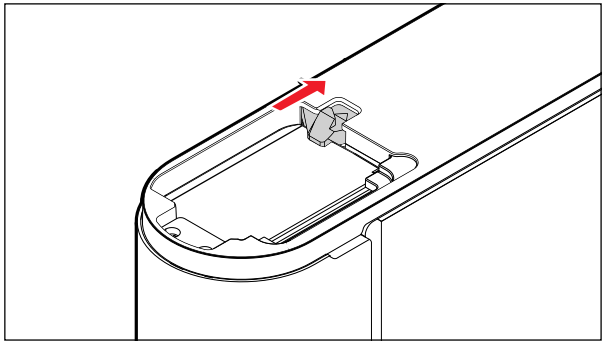

Important
Ensure that the bottom cover is securely closed before switching on the camera.

CHARGE STATUS DISPLAY IN THE VIEWFINDER

- Press the function button 1x
  - Display in percent

CHARGE STATUS DISPLAY IN THE VISOFLEX

(optional accessory)
Pressing the function button will display the charge level of the battery in the Visoflex.

Display	Charge status
	approx. 88 - 100%
	approx. 63 - 87%
	approx. 47 - 62%
	approx. 36 - 46%
	approx. 26 - 35%
	approx. 0 - 25% The battery needs charging or replacing

MEMORY CARD INSERTION/REMOVAL

The camera will save exposures to an SD (Secure Digital), SDHC (High Capacity) or SDXC (eXtended Capacity) memory card.

Notes

- SD/SDHC/SDXC memory cards are available from various suppliers in various sizes and with differing read/write speeds. Memory cards with high storage capacities and high read/write speeds offer quick storage and rendering.
- Memory cards with a capacity of less than 1GB are not supported. Memory cards with capacities between 1GB and 2GB must be formated before first use.
- Check the memory card for correct alignment if you are having difficulties inserting it into the camera.

The memory card slot is located directly next to the battery compartment. Open/Close the bottom cover (see p. 24)

INSERTION

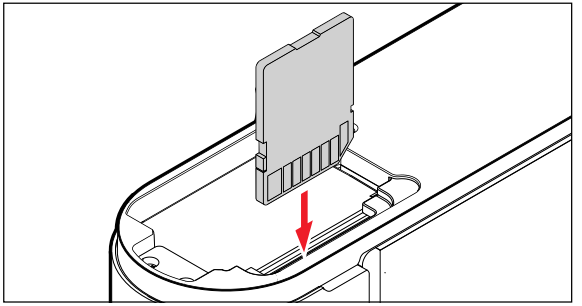

REMOVAL

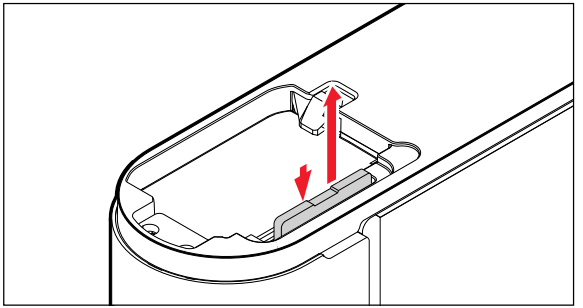

Important

Check that the bottom cover is closed correctly before you switch on the camera.

COMPATIBLE LENSES

LEICA M LENSES

Most Leica M lenses can be used with any lens equipment (with or without 6-bit encoding in the bayonet). Your camera will also deliver great pictures with Leica M lenses without encoding. We recommend entering the lens model type manually to ensure the best possible image quality (see p. 40).
Please read the following sections for details on the very few exceptions and limitations.

Notes

- Our Leica Customer Care department can retrofit many Leica M lenses with 6-bit encoding.
- Leica M lenses come with a control curve that mechanically transfers the set distance to the camera to allow manual focusing via the rangefinder of the Leica M camera. Please note the following when using the rangefinder with wide-aperture lenses (≥ 1.4):
  - The focusing mechanism of every camera and every lens is adjusted individually at the Leica Camera AG factory in Wetzlar with the greatest possible precision. Extremely narrow tolerances are adhered to in this process, which allow precise focusing of every camera/lens combination in photographic practice.
  - If wide-aperture lenses (≥ 1.4) are used with an open aperture, the then sometimes resulting very low depth of field and inaccuracies in focusing with the rangefinder may lead to setting errors resulting from the (added) overall tolerance of the camera and lens. It can therefore not be ruled out that a specific camera/lens combination may result in systematic deviations.
  - We recommend having the lens and camera checked by Leica Customer Care if you notice a general deviation of the focal position in a specific direction over time. Our technicians will ensure that both products are calibrated within the permissible overall tolerance. However, a 100% match of the focal position cannot be achieved for all pairings of cameras and lenses.
- In such cases, we recommend using the Live View function with the appropriate setting facilities.

COMPATIBLE LEICA LENSES WITH ADAPTER

The optional accessory R-adapter M allows the use of Leica-R lenses as well as Leica M lenses. Please visit the Leica Camera AG website for more information on this accessory.

LENSES WITH LIMITED COMPATIBILITY

COMPATIBLE, BUT MAY POSE RISK OF DAMAGE TO THE CAMERA AND/OR LENS

- Lenses with retractable tube must only be used with the tube extended, i.e. never attempt to retract the tube while the lens is attached to the camera. This does not apply for the current Makro-Elmar-M 90 f/4 model, as its tube will not retract into the camera itself and can therefore be used without restriction.
- When using Heavy lenses attached to a tripod-mounted camera, e.g. Noctilux 50 f/0.95 or Leica R lenses with an adapter: Make sure that the tilt of the tripod head cannot move inadvertently when the camera is not held. A sudden tilt and impact could result in damage to the lower edge of the camera bayonet. That is why you should always use the tripod mount on relevantly equipped lenses.

COMPATIBLE, BUT EXACT FOCUSING MAY BE LIMITED

Despite the high precision of the rangefinder on the camera, exact focusing with 135 mm lenses with an open aperture cannot be guaranteed due to the very low depth of field. We therefore recommend stopping down by at least 2 steps. Live View mode, on the other hand, plus the various setting aids provided, allow unrestricted use of this lens.

USABLE, BUT EXPOSURE METERING IS POSSIBLE ONLY IN LIVE VIEW MODE

- Super-Angulon-M 21 f/4
- Super-Angulon-M 21 f/3.4
- Elmarit-M 28 f/2.8 (Serial numbers below 2 314 921)

INCOMPATIBLE LENSES

- Hologon 15 f/8
- Summicron 50 f/2 with close-up function
- Elmar 90 f/4 with retractable tube (manufactured 1954-1968)
- Some examples of the Summilux-M 35 f/1.4 (non-aspherical, manufactured 1961-1995, Made in Canada) cannot be attached to the camera or cannot focus to infinity. Leica Customer Care can modify these lenses for use with the camera.

ATTACHING/DETACHING THE LENS

ATTACHING

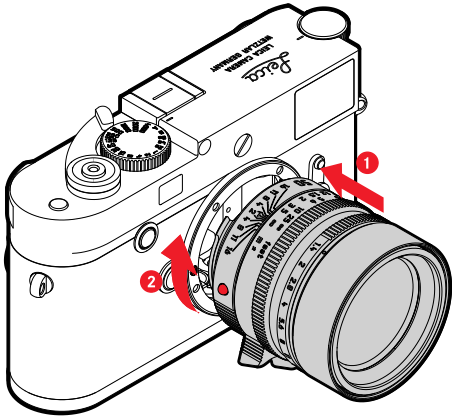

- Ensure that the camera is switched OFF
- Hold the lens on the fixed ring
- Position the alignment button on the lens opposite the release button on the camera housing
- Attach the lens in this position
- Turn the lens clockwise until you hear and feel it click into place

DETACHING

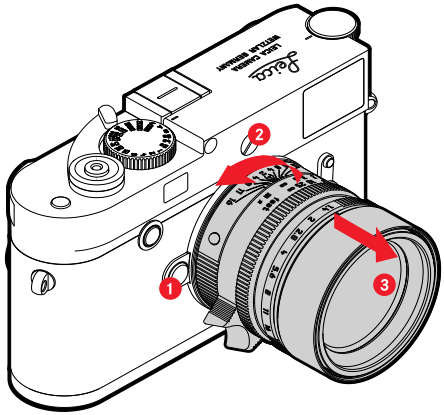

- Ensure that the camera is switched OFF
- Hold the lens on the fixed ring
- Press and hold the release button on the camera housing
- Turn the lens counter-clockwise until the alignment button is opposite the release button
- Remove the lens

CAMERA OPERATION

OPERATING ELEMENTS

MAIN SWITCH

The main switch switches the camera on and off.

SWITCHING THE CAMERA ON

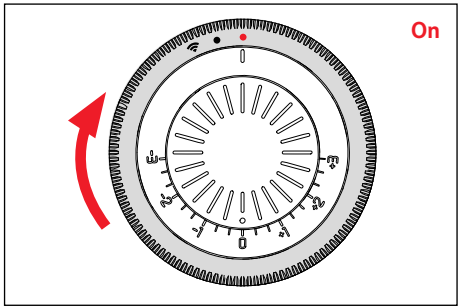

Notes

- Once switched on, the camera will be ready to use after approx. 1 s.
- The LED lights up briefly and the displays in the viewfinder appear.

SWITCHING THE CAMERA OFF

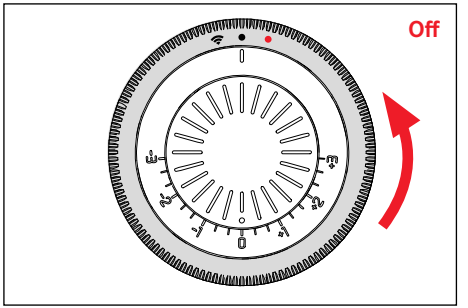

WLAN ACTIVATION

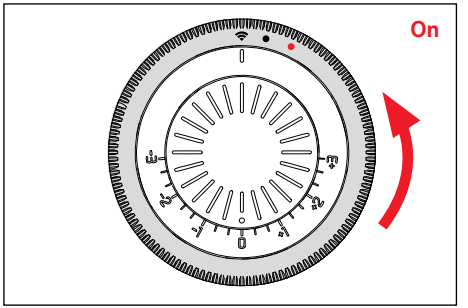

SHUTTER BUTTON

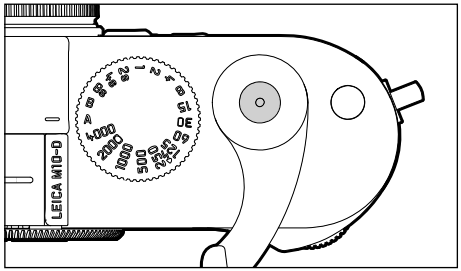

The shutter button works in two stages.

1. **Tapping** (= Pressing the shutter button to the 1st pressure point)
   - activates the camera electronics and rangefinder display
   - saves the metered exposure value in aperture priority mode, i.e. the shutter speed calculated by the camera
   - restarts a self-timer delay in progress (Activation via app)
   - reverts the camera back to picture mode:
     - if playback mode is set (Activation via app when using Visolflex)
     - if menu control is active
     - if the camera is in Standby mode
2. **Press down fully**
   - to take the picture
     - The data is then transferred to the memory card.
   - starts a preselected self-timer delay

Notes

- Press down the shutter button in a smooth motion until you hear the click of the shutter to prevent camera shake.
- The shutter button remains locked
  - if the memory card inserted and the internal buffer memory are (temporarily) full.
  - if the battery has exceeded its performance limits (capacity, temperature, age).
  - if the memory card is write-protected or damaged.
  - if image numbering on the memory card has reached its limit.
  - if the camera prompts for language, date and time settings at first use or after a reset.
  - if the sensor is too hot.
  - if the bottom cover is not closed correctly.

SHUTTER SPEED SETTING WHEEL

The shutter speed setting wheel has no stop, which means it can be turned in either direction from any position. It will click at each engraved position and for intermediate values. Intermediate positions outside the click positions must not be used. Please read the section “Exposure” (see p. 49) for details about exposure settings.

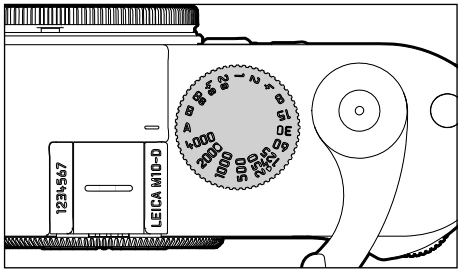

- **A**: Aperture priority mode (automatic shutter speed control)
- **4000** - **8s**: Fixed shutter speed of 1/4000 s to 8 s (with intermediate values, clicking in ½ increments)
- **B**: Long-term exposure (bulb)
- **ϟ**: The shortest possible sync speed of 1/180 s for flash mode

ISO SETTING WHEEL

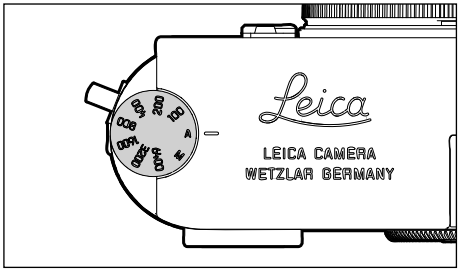

- **A**: Automatic ISO sensitivity control
- **100** - **6400**: Fixed ISO values
- **M**: Manual ISO sensitivity control (Setting via app only)

Fig. 1

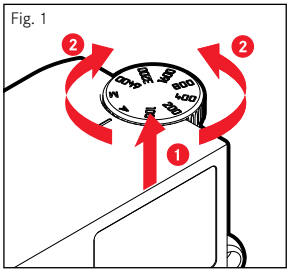

Fig. 2

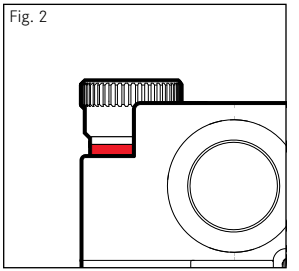

- Push the ISO setting wheel up until you feel it clicking into place and the red line (fig. 2) is visible
- Turn the setting wheel to the desired value
- Push down the ISO setting wheel

THUMBWHEEL

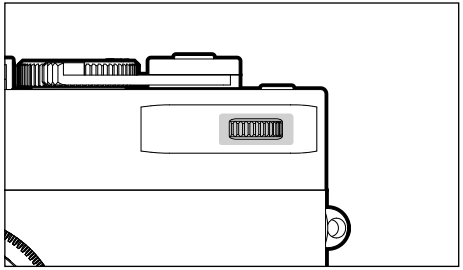

- Zooming and navigation in the Live View image when using Visoflex
- Setting the date/time
- Setting selected menu items/functions

FOCUS BUTTON

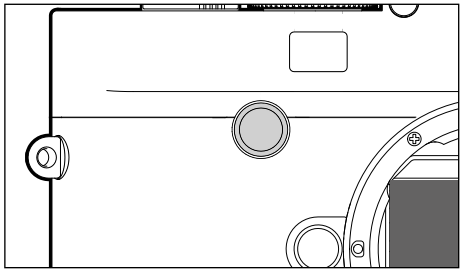

- Focus aid activation
- Resetting the camera to factory settings

FUNCTION BUTTON

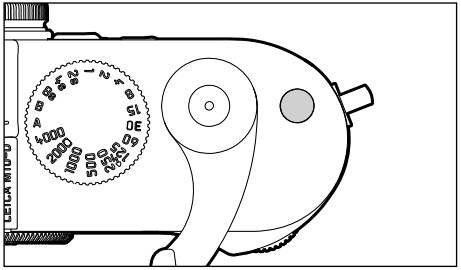

- Battery capacity display
- Firmware update
- Changing Live View mode
- Reset to factory settings
- Sensor cleaning
- Date/time setting
- Display of remaining exposure counter

CAMERA DEFAULT SETTINGS

MENU LANGUAGE

The menu language is English and cannot be changed.

SETTING THE DATE AND TIME

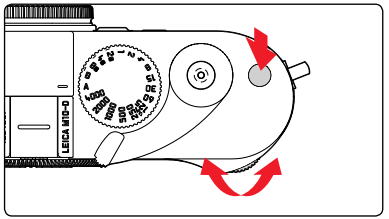

- Set the main switch to ●
- Press and hold the function button (≥ 12 s)
- Turn the thumbwheel
  - The values are adjusted.
- Press the function button briefly
  - The next setting appears.
- Press the function button longer
  - Setting is saved and exited.

to cancel:

- Press the shutter button

Settings order

Setting the year:	
Setting the month:	
Setting the day:	
Setting the hour:	
Setting the minute:	

AUTOMATIC TIME VIA GPS

(Setting via app only)

Note

- Auto GPS Time is available only if the GPS function is set to ON when Visoflex is used.

AUTO POWER SAVING (STANDBY MODE)

The camera will switch to the power-saving standby mode after a preset time to extend battery life if this function is activated. Factory setting: 10 min.

Other setting options are available via app.

Note

The camera can be reactivated from standby mode at any time by pressing the shutter button or by switching the main switch off and on again.

VIEWFINDER SETTINGS

BRIGHTNESS

RANGEFINDER

The brightness sensor 13 automatically adjusts rangefinder brightness.

VISOFLEX

Visoflex brightness remains unchanged.

Note

This automatic control is not available for Leica M lenses with viewfinder attachments, as they cover the brightness sensor that supplies the required information. The frames and displays will therefore be displayed at a constant brightness when Leica M lenses are used.

INFORMATION DISPLAYS

You can use Visoflex for the display of various settings in picture mode.

When using the rangefinder

- ▸ Tap the function button
  - The displays for battery capacity and number of remaining exposures alternate.

When using Visoflex

Various information is displayed in the header and/or footer line. The image is initially displayed without information displays in the default setting.

- ▸ Tap the shutter button
  - The footer line appears.
- ▸ Press the function button
  - The header and footer lines are activated permanently. Both lines disappear when you tap the shutter button.

You can select a number of other displays in addition to the standard information contained in the header and footer lines to adjust the EVF in picture and review mode to your needs. These include assist functions for exposure settings, picture composition and focusing (see p. 44).

BASIC PICTURE SETTINGS

FILE FORMAT

Choose the JPG format JPG or the standardized raw data format DNG (= digital negative). These can be used individually or simultaneously. Factory setting: DNG

JPG Setting via app only.

Notes

- The standardized DNG (Digital Negative) format is generally used for the storage of raw data.
- The resolution setting for the JPG format is used (see next section), i.e. the two files may have differing resolutions if picture data is saved in DNG and in JPG format simultaneously.
- The number of remaining exposures shown in the viewfinder/ EVF panel may not necessarily change after every picture taken. A counter change depends on the subject; very fine image structures result in higher data quantities, while homogeneous surfaces mean less data.

IMAGE PROPERTIES

JPG RESOLUTION

(Setting via app only)

The JPG format setting offers 3 image resolution (number of pixels) options. L–JPG (24 MP), M–JPG (12 MP) and S–JPG (6 MP) (MP = megapixel). You can therefore adjust your settings to the intended use and available memory card capacity.

Note

The DNG format always uses the highest resolution (24 MP), no matter what JPG setting is selected.

JEPG SETTINGS

(Setting via app only)
One of the many advantages of digital photography is that it is very easy to change key image properties.
You can manipulate contrast, sharpness and color saturation before the picture is taken. These functions can be set via app only.

Note
The functions and settings described in this section apply for pictures taken in JPG format only.

CONTRAST

The contrast setting, i.e. the difference between light and dark image sections, determines whether an image comes across as “flat” or “brilliant”. Increasing or decreasing this difference impacts on contrast, meaning that some image sections are rendered with more or less light.

SHARPNESS

Rendering part of the image in complete sharpness, i.e. focusing on the main subject, is prerequisite for a great picture. The impression of sharpness in a picture is largely determined by edge sharpness, i.e. by how small the transition area between light and dark is at edges in the picture. Expanding or reducing these areas will therefore change the impression of sharpness.

COLOR SATURATION

The saturation factor in color images determines, whether colors in the picture appear “pale” and pastel-like or “bright” and colorful. While you can’t do anything about weather conditions (clear/misty), you can change the way an image is rendered.

MONOCHROME IMAGES

You can choose to save your images in color or monochrome, provided you take the pictures in JPG format.

LENS DETECTION

The 6-bit encoding in the bayonet of current model Leica M lenses allows the camera to detect the lens type.

- This information is used for e.g. picture data optimization. Edge darkening, for example, which can become noticeable when wide-angle lenses and large apertures are used, is compensated in the relevant picture data.
- The information provided by the 6-bit encoding is also written to the EXIF data of the pictures. The focal length of the lens is additionally displayed when rendering the extended picture data.
- The camera will write an approximate exposure value to the EXIF picture data, which is calculated individually using the exposure metering system. This is done whether or not an encoded or unencoded lens or a non-M lens is attached via adapter, and regardless of whether the lens type was entered in the menu.

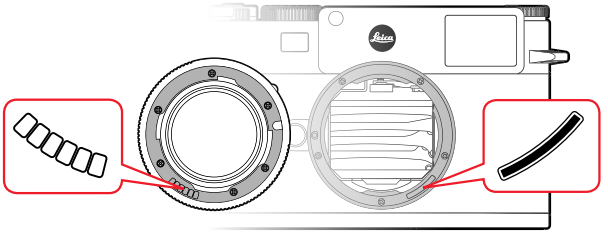

USING A LEICA M LENS WITH 6-BIT ENCODING

The camera will automatically set the correct lens type when a Leica M lens with 6-bit encoding is used. No manual setting will be required. The camera will switch to Auto automatically when an encoded Leica M lens is attached, regardless of the original lens setting.

USING A LEICA M LENS WITHOUT 6-BIT ENCODING

A standard profile will be used if a Leica M lens without 6-bit encoding is attached. No lens data will be saved to the EXIF data.

Notes on Leica M lenses

- Many lenses have their item number engraved on the opposite side of the depth of field scale.
- The list also includes lenses that used to be available without encoding (pre-June 2006). Newer lenses are all provided with encoding and can therefore be automatically detected.
- When using the Leica Tri-Elmar-M 16-18-21 f/4 ASPH., the set focal length is not transferred to the camera housing will therefore also not be included in the EXIF picture dataset. You can, however, enter the focal length manually.
- Tri-Elmar-M 28-35-50 f/4 ASPH., on the other hand, comes equipped with a means for mechanical transmission of the set focal length to the camera for mirroring the correct bright-line frame in the viewfinder. The focal length is scanned by the camera electronics and the information is used for focal length-specific corrections. Due to space limitations, the app lists only one item number (11 625). The two other variants – 11 890 and 11 894 – can be used as well and the menu settings will apply.

USING A LEICA R LENS

A standard profile is used when a Leica R lens is attached via the Leica R adapter M. No lens data will be saved to the EXIF data.

PICTURE MODE

IMAGE TYPES

USING THE RANGEFINDER

IMAGE FIELD (BRIGHT-LINE FRAME)

The bright-line rangefinder of this camera is not just a very high-quality, large, brilliant and bright viewfinder – it also doubles as a highly precise, lens-coupled rangefinder. All Leica M lenses with focal lengths between 16 and 135 mm are coupled automatically when they are attached to a camera. The viewfinder has a magnification factor of 0.73x.

The bright-line frame is coupled with the focusing function in such a way that the parallax – the offset between the lens axis and the viewfinder axis – is compensated automatically. At ranges under 2 m, the sensor captures slightly less than indicated by the inner edges of the bright-line frame, and slightly more at longer ranges (see adjacent diagram). These slight, almost negligible deviations are systemic. The bright-line frame of a camera with viewfinder must be adapted to the view angle of the relevant focal length of the lens. The nominal view angle changes slightly when focusing due to the changing draw-out, i.e. the distance of the lens system to the sensor level. When the set distance is below infinity (and the draw-out accordingly greater), the actual view angle also decreases – the lens captures less of the image object. The view angle differences at greater focal lengths tend to be larger due to the greater draw-out.

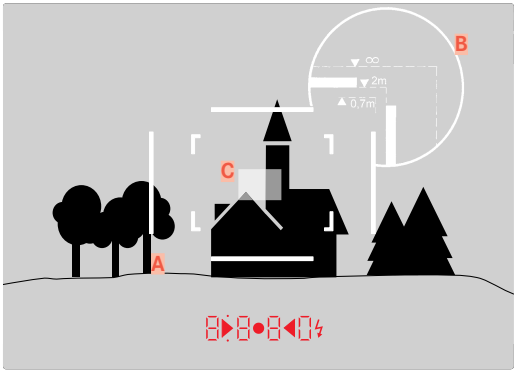

All pictures and bright-line frame positions at 50 mm focal length

A	Bright-line frame
B	Actual image field
Set to 0.7 m	The sensor captures around one frame width less
Set to 2 m	The sensor captures the exact image field shown within the inner edges of the bright-line frame
Set to infinity	The sensor detects around 1 or 4 (vertical or horizontal) frame width(s) more
C	Metering field

Notes

- The bright-light frames illuminated by white light LEDs appear alongside the exposure meter LEDs at the lower edge of the viewfinder image, once the camera electronics are activated.
- The rectangular distance measuring field, which is brighter than the surrounding metering field, is in the center of the viewfinder frame. Please read the relevant sections for more information about distance and exposure metering.

The relevant bright-line frame will light up in the combinations 35 mm + 135 mm, 50 mm + 75 mm or 28 mm + 90 mm when lenses with a focal length of 28 (Elmarit as of serial number 2 411 001), 35, 50, 75, 90 and 135 mm are used.

35 mm + 135 mm

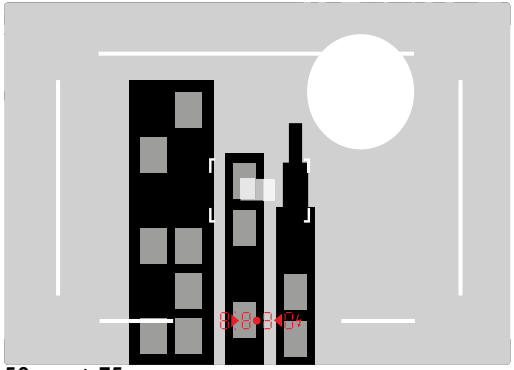

50 mm + 75 mm

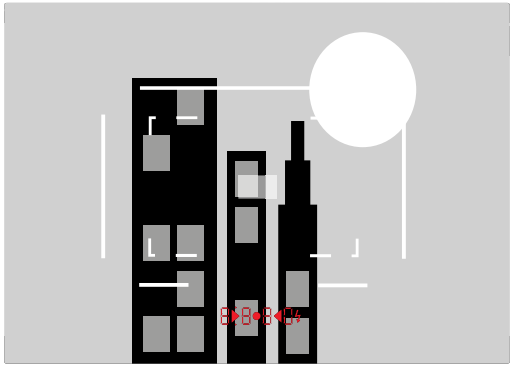

28 mm + 90 mm

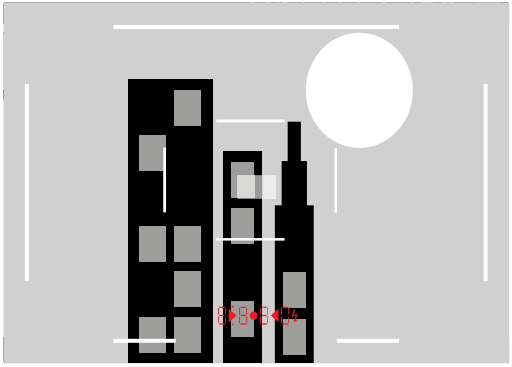

LIVE VIEW MODE

(When using Visoflex)

When Visoflex is used, the image is show exactly as it is rendered by the attached lens.

Notes

- Live View mode is based on the image captured by the sensor. The camera must control the shutter. Shutter control is audible and may result in a slight delay in shutter release.
- The camera will warm up when Live View mode is used for an extended period of time. Power consumption will simultaneously increase.
- Alternating current causes brightness fluctuations invisible to the human eye in many light sources. This may result in a flickering of the Live View screen image due to the sensitivity and scan rate of the image sensors. Picture quality will not be impacted. The effect can be avoided by selecting a slower shutter speed.

FOCUSING

Various assist functions are provided for focusing, depending on whether you use the camera's rangefinder or Live View mode.

FOCUS METERING METHODS USING THE RANGEFINDER

The rangefinder of this camera is very precise due to its wide and effective measurement base. Image sharpness can be via the superimposed image or the split image method.

SUPERIMPOSED IMAGE METHOD (DOUBLE IMAGE)

For a portrait, you might focus on the eyes using the metering field of the rangefinder, turning the focus ring on the lens until the contours are aligned exactly inside the metering field.

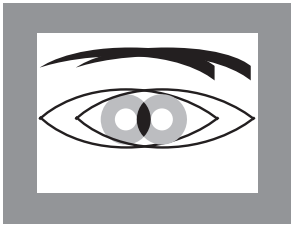

out of focus

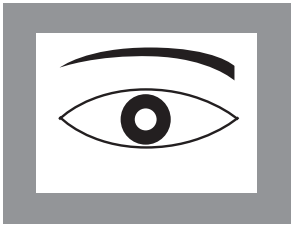

in focus

SPLIT IMAGE METHOD

For an architectural photograph, you might aim the metering field of the rangefinder at e.g. the vertical edge or any other clearly defined vertical line and keep turning the focus ring on the lens until the edge contour or the line is visible at the outer edges of the metering field without any offset.

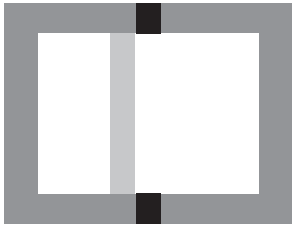

out of focus

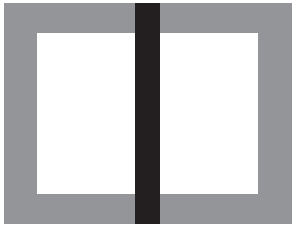

in focus

Notes

- Very precise distance measurements are particularly beneficial when using wide-angle lenses with a relatively large depth of field.
- The metering field of the rangefinder is displayed as a bright, sharp-edged rectangle in both methods. The position of the metering field cannot be changed. It will always be at the center of the viewfinder.

FOCUS METERING METHODS IN LIVE VIEW MODE

You can set the image sharpness in Live View mode via the screen image – it will show the image subject at the exact sharpness as it is rendered by the lens based on the distance and aperture setting. There may be differences between the settings displayed and those perceived to be optimal due to specific sensitivities and functional conditions.

- Turn the focus ring on the lens to focus on the desired subject elements

ASSIST FUNCTIONS FOR MANUAL FOCUSING IN LIVE VIEW MODE

(When using Visoflex)
Your camera offers two useful assist functions to facilitate and improve setting accuracy:

- The magnification of an (initially) central cropped section of the screen image (Zooming).
- Marking of screen image sections where subject elements are in clear focus (Focus Peaking)

Both assist functions can be used simultaneously. Both are part of the factory settings and therefore activated by default. You can optionally use only the magnification function or only Focus Peaking via the app – or deactivate both.

MAGNIFICATION

Enlarged display of a central section:
The larger details of the image subject appear on the screen, the better you can assess their sharpness.
Setting options: (x1, x3, x6)

- Turn the thumbwheel to the left
- Turn the focus ring to sharpen the desired subject elements.

To shift the position of the section within the image field:

- Press and hold the focus button and turn the thumbwheel to the left or right

Notes

- The screen image will show the following when the focus ring or the thumbwheel is turned:
  - the enlarged cropped section
  - the approximate position of the cropped section in the overall image at the bottom left (you will see a framed rectangle)
- Use the thumbwheel to choose one of two magnification factors.
- You can return to the standard, i.e. non-magnified view at any time:
  - By tapping the shutter button
  - By turning the thumbwheel in anti-clockwise direction
- Turning the focus ring on the lens will return the view to the most recently used cropped section size.

FOCUS PEAKING

The contours of objects shown in perfect focus on the LCD panel can be rendered in color for easy recognition.
Factory setting: Function ON. Color: red

Notes

The function can be deactivated or the color changed via app.

Application

- ▸ Select an image section
- ▸ Turn the focus ring to mark the desired subject elements
  - All subject elements that are rendered in focus with the selected distance setting are marked with a silhouette in the selected color.

Important

- This function relies on focus peaking, i.e. differences between bright and dark. That may mean that subject elements not in sharp focus may be marked due to their high contrast.
- Display accuracy decreases when a wide-angle lens is used with a small aperture (= high depth of field).

ISO SENSITIVITY

The ISO setting covers a range of ISO 100 - 50000, allowing you to adapt to the relevant situation as required.
In addition to fixed settings, the camera also features the **A** function, in which the camera automatically adjusts the sensitivity to ambient brightness and/or shutter speed/aperture settings. In conjunction with aperture priority mode, this function extends the range for automatic exposure control. There is more leeway for the use of preferred shutter speed and aperture combinations when setting the exposure manually. You can set priorities within the scope of the automatic setting, e.g. for reasons of picture composition.

Note
When high ISO values are used or the image is edited later, image noise, as well as vertical and horizontal stripes may become visible, particularly in larger, evenly lit areas of the image subject.

Choose a click value engraved on the ISO setting wheel or the positions:
- **A**: for automatic setting; values between ISO 200 and 50000 will be used
- **100** - **6400**: Fixed ISO values
- **M**: for intermediate values (e.g. 250) or for values greater than 6400 (Setting via app only)

TO USE FIXED ISO VALUES ENGRAVED ON THE ISO SETTING WHEEL

- Turn the ISO setting wheel to a position in which the desired value or setting matches up with the alignment point
  - The set value is displayed:
    - in the viewfinder (for approx. 2 s instead of the shutter speed)
    - in Visoflex (only if the settings were called up beforehand)

TO RESTRICT THE AUTOMATIC SETTING RANGE

Maximum Auto ISO is preset to 12500.
Other settings are available via app.

WHITE BALANCE

In digital photography, white balance ensures neutral color rendering in any light. White balance is based on the camera being preset to render a particular light color as white.

Factory setting: Auto (for automatic control, which delivers neutral results in most situations.)

Other setting options are available via app.

EXPOSURE

EXPOSURE METERING METHODS

The Leica M10-D only offers center-weighted metering.
Other metering options are available via app (Spot, Multi Point).

SPOT METERING (Spot)

Spot metering only captures and analyzes a small area in the middle of the screen image, which is shown in a circle.

CENTER-WEIGHTED METERING (Center-weighted)

This method considers the entire image field. The subject elements captured in the center will, however, impact on the calculation of the exposure value more so than areas around the edges.

MULTI-FIELD METERING (Multi Point)

This metering method is based on the detection of multiple values. These values are used in an algorithm to calculate an exposure value appropriate for a good rendering of the assumed main subject.

When using the rangefinder

Mostly center-weighted metering.

The light reflected by the light-colored shutter blades is captured and measured by a photodiode. When the measuring range of the exposure meter is undercut in a manual setting and very low light density, then the triangular LED (▶) in the viewfinder on the left will flash as a warning; the LED on the right (◀) will flash when the measuring range of the exposure meter is surpassed. The shutter speed icon will flash as a warning if a correct exposure cannot be achievable using the available shutter speeds in aperture priority mode. Undercutting or surpassing the required shutter speed (the longest or shortest available) will cause the relevant icon to flash. As exposure metering is done with the working aperture, the same can be achieved by stopping down the lens.

When using the Visoflex/App Live View

(Setting via app only)

Select spot, center-weighted and multi-field metering. The metering will then be done via the picture sensor.

The readiness of the exposure meter is signaled by continuously lit displays in the viewfinder or the Visoflex:

- the shutter speed is displayed in aperture priority mode
- one of the two triangular LEDs lights up in the viewfinder, possibly in conjunction with the round LED in the middle, and the light balance is shown on the LCD panel for a manual setting.
- the line on the left of the light balance will flash in the Visoflex if the measuring range is undercut/surpassed.

When the shutter button is released without activating the shutter, the relevant LED(s) will remain lit until the camera powers down automatically.

The exposure meter is disabled when the shutter speed setting wheel is set to **B**.

Note

- Spot metering is available only in App Live View.
- The shutter speed for correct exposure or the deviation from a correct exposure setting is shown or determined via viewfinder or EVF displays.

EXPOSURE SETTING

The camera offers two exposure modes: Aperture priority mode or manual setting. Choose one of the two options depending on image subject, situation or individual preference.

APERTURE PRIORITY MODE A

When the shutter speed setting wheel is in the **A** position, the camera electronics will calculate the correct shutter speed automatically and steplessly in the range between 1/4000 s and 4 min (max. exposure time available only for ISO 100/200). The calculation includes the set sensitivity, metered brightness and the manually selected aperture. The resulting shutter speed is displayed in half increments for more transparency.
The remaining exposure time after shutter release is counted down in seconds on the display for shutter speeds greater than 2 s. The actual calculated and steplessly controlled exposure time may vary from the exposure time displayed in half step increments: if e.g. the display shows 16 (the closest value) before shutter release, but the calculated exposure time is longer, then the countdown after shutter release can start from 15. Under extreme lighting conditions and based on all the parameters, the exposure metering may generate a shutter speed that is outside the focus range, i.e. brightness values that would require shorter exposures than 1/4000 s or longer than 4 min. The camera will use the stated min. or max. shutter speeds and these values will flash as a warning in the viewfinder if that is the case.

Notes

- Image noise becomes apparent when using higher sensitivities, particularly on uniform dark areas. In order to reduce this annoying phenomenon, the camera will take a second “black picture” (taken with the shutter closed) automatically after pictures taken with slow shutter speeds and high ISO values. The noise metered in this parallel picture is then digitally “subtracted” from the data for the actual picture. The LED will light up in red until the black picture is taken. The doubling of the “exposure” time must be taken into account for long exposure times. The camera must not be switched off during that time.
- When the **B** function is selected in conjunction with the self-timer (see S.56), then the shutter button doesn’t have to be held down and the shutter will remain open until the shutter button is pressed again (the equivalent of a **T** function).

[1] Time display is an example.

MANUAL EXPOSURE SETTING

- Tap the shutter button
- Set the desired exposure (using the shutter speed setting wheel or the aperture setting wheel on the lens).
  - In Live View mode this is done with the help of the mark on the light balance in the footer line of the screen image.
  - When the rangefinder is used, this is done with the help of a light balance consisting of three LEDs.

In addition to the direction of rotation of the shutter speed setting wheel and aperture setting ring necessary for correct exposure, the three LEDs of the light balance in the viewfinder also indicate underexposure, overexposure and correct exposure:

▶ Underexposure by at least one aperture stop; turn to the right

▶● Underexposure by a 1/2 aperture stop; turn to the right

● Correct exposure

●◀ Overexposure by a 1/2 aperture stop; turn to the left

◀ Overexposure by at least one aperture stop; turning to the left is required

Notes

- The shutter speed setting wheel must be clicked to one of the engraved exposure shutter speeds or to one of the intermediate values.
- The remaining exposure time after shutter release is counted down in seconds on the display for shutter speeds greater than 2 s.

EXPOSURE CONTROL/FUNCTIONS WITH AUTOMATIC EXPOSURE

EXPOSURE SIMULATION

You can now assess the effect of the relevant exposure setting on the image before taking the picture.
Factory setting: Permanent

When Permanent is selected, the image object will be shown in Live View mode[1] in the brightness of the relevant exposure setting. This is displayed[2] as 👁.

[1] When using Visoflex.
[2] This will apply as long as the subject brightness and the set exposure don't result in excessively low or high brightness values, and as long as the internal exposure setting is not greater than 1/60 s.

METERING MEMORY LOCK

We often want to arrange important subject elements outside the center of the picture for reasons of picture composition and these elements may sometimes be very bright or very dark. Center-weighted metering and spot metering, however, mainly capture an area in the center of the image and are calibrated to an average gray scale value.
Image subject or situations like the ones described above, can be easily handled in aperture priority mode using the metering memory lock.

Notes

- A metering memory lock doesn't make much sense in conjunction with multi-field metering, because a targeted capture of an individual subject element will not be possible.
- In conjunction with metering memory lock, Live View also offers an exposure simulation feature.

- ▶ Aim at the key subject element (using the metering field for spot metering) or alternatively at another detail with average brightness.
- ▶ Tap the shutter button
  - The measurement is taken and saved.
  - As long as the shutter button is held at the first pressure point, a small red dot will appear in the viewfinder at the top in the number line for confirmation, and the exposure time won't change, even if lighting conditions change.
  - Pan the camera to capture the final image section while keeping the shutter button pressed.
- ▶ Shutter release

A change in the aperture setting after the metering memory lock is set will not result in an adjustment of the shutter speed, i.e. the end result would be an incorrect exposure. The metering memory lock is canceled when you release the shutter button.

EXPOSURE COMPENSATION

Exposure meters are calibrated for a medium gray scale value (18% reflection), which matches a standard, i.e. average image subject. Should the measured image detail not fulfill that requirement, then the a relevant exposure compensation can be effected. Specifically where several pictures are taken in sequence, for example if for a series a slightly lesser or greater exposure is desired for a particular reason, then exposure compensation can be a very useful function: Once set, the setting remains active – unlike the metering memory lock – until it is reset.
Exposure compensation can be set in the range ±3EV in 1⁄3 EV increments (EV: exposure value).

- Set the desired value using the exposure compensation focusing screen **21**

Notes

- When mode A is selected, the compensation value is displayed in the viewfinder, for example 1.0– /0.3 (temporary display instead of the shutter speed). Then the compensation value is shown in the form of changed shutter speeds and a flashing dot at the bottom or as a value for about 0.5 s when the shutter button is tapped.
- Regardless of the setting method selected, the value is displayed on the INFO screen in Live View mode: a tag is shown in the lower part of the light balance if the viewfinder is used. The compensation value is indicated by EV+X in the original menu list.

LONG-TERM EXPOSURE (B)

In setting **B**, the shutter remains open as long as the shutter button is held down (up to max. 4 min depending on ISO setting).
This function can also be used to permanently set shutter speeds longer than 8 s.

The longest shutter speed can be set when using Visoflex.

- Set the shutter speed setting wheel to **B**
- Press the focus button for approx 1 s
  - The submenu containing the shutter speeds or B is shown in the Visoflex. Available shutter speeds are indicated in white (may vary depending on ISO sensitivity), those not available are grayed out.
- Turn the thumbwheel to select the desired shutter speed
  - Exit the submenu by tapping the shutter button or the focus button.
- Shutter release

An additional T function is available in conjunction with the self-timer: The shutter will open after the preset delay automatically if **B** is set and the self-timer is activated by tapping the shutter button. It will remain open – without having to hold down the shutter button – until the shutter button is tapped again. This prevents blurring in long-term exposures when the shutter button is pressed.

In each of these cases, the exposure meter remains deactivated; after shutter release, however, the digital number display in the viewfinder counts the elapsed exposure time in seconds.

Notes

- Long exposure times may cause severe image noise.
- After exposures with slower shutter speeds (from approx. 1/30 s, may differ depending on other menu settings), a data processing procedure will help reduce this annoying phenomenon. The process will take as long as the exposure. The doubling of the "exposure" time must be taken into account for long exposure times. The camera must not be switched off during that time.

[1] Time display is an example.

OTHER FUNCTIONS

AUXILIARY DISPLAYS

(When using Visoflex)

HISTOGRAM

Histogram represents the brightness distribution in the picture. The horizontal axis shows the graduated values from black (left) through gray to white (right). The vertical axis corresponds to the number of pixels at each brightness level.
This type of rendering – in conjunction with the impression of the actual image – allows an additional quick and easy assessment of the exposure setting.

▶ Press the function button
- The INFO display activates.
- It appears at the top left in the Visoflex.

Notes

- The histogram is always based on the brightness displayed, i.e. depending on the settings used, it may not represent the final exposure.
- In picture mode, the histogram should be regarded as a "trend indicator" and not as a depiction of the exact number of pixels.
- The histogram during rendering may differ slightly from the one during exposure.

GRID LINES

(Setting via app only)
The grid divides the image frame into nine equal fields. It helps with e.g. picture composition and camera orientation. You can choose one of two grid displays in the app. They divide the frame into 3 x 3 or 6 x 4 fields.

SERIAL EXPOSURES

(Setting via app only)

The camera is set to single shot exposures by default. You can also take serial exposures to e.g. capture motion sequences at various stages. Specify via the app, whether you want to take single shots or serial exposures.

Once you have selected your setting, the camera will take serial exposures as long as you keep the shutter button pressed down fully and you have sufficient space on your memory card. Tapping the shutter button will take single shots instead.

Notes

- The specified picture sequence and the max. number of pictures in a series refer to a default setting (ISO 200, JPG format L_JPG). With other settings or depending on the picture content, White Balance setting and the memory card used, the frequency and number may vary.

Regardless of how many pictures were taken in a series, the last picture in the series or the last picture in the series or the last picture saved on the memory card while the saving process is ongoing will be displayed first in both review modes.

SELF-TIMER

(Setting via app only)

You can use the self-timer to take a picture with a delay of either 2 or 12 s. This is useful for group photographs in which you want to be included or if you want to avoid blurring caused by an unsteady hand. We recommend that the camera is placed on a tripod.

This function can be activated via the camera or the app.

- Activate the function via the app.
- Start via the app or press the shutter button

A flashing LED at the front of the camera counts down the first 10 s time delay if 12 s delay were selected.

- The self-timer function can be canceled by pressing the shutter button at any time while the 12 s are counting down – the relevant setting remains intact and can be restarted by tapping the shutter button.

Note

In self-timer mode, the exposure value is set just before the picture is taken and not when the shutter button is pressed.

FLASH PHOTOGRAPHY

The camera determines the necessary flash intensity by firing one or more pre-flashes, fractions of a second before taking the actual picture. The main flash fires immediately after, at the start of exposure. All factors influencing exposure (e.g. filters, aperture settings, distance to the main subject, reflective ceilings, etc.) are automatically considered.

COMPATIBLE FLASH UNITS

The following flash units offer all Leica M10-D functions described in this manual:

- Leica system flash units like the models SF 26, SF 40, SF 60, SF 64.
- Other Leica system flash units (exception: Leica SF 20).
- Other commercially available flash units with a standard flash foot and positive center contact[1] (fired by the center/X contact).
- Studio flash systems (fired via synchronization cable).

Note

We recommend the use of state-of-the-art thyristor-controlled electronic flash units.

[1]The WB Flash setting is recommended if flash units are used that are not designed specifically for use with this camera and that do not automatically adjust the white balance.

ATTACHING THE FLASH UNIT

- Switch off the camera and flash unit
- Slide the foot of the flash unit all the way into the accessory shoe and use the clamping nut (where available) to secure it against accidental detaching.
  - Movement inside the accessory shoe can interrupt required contacts and therefore cause malfunctions.

Notes

- The camera and flash unit must be switched off before the connection is made.
- Make sure that the accessory shoe cover is always in place when no accessory is attached (e.g. a flash unit).

FLASH EXPOSURE METERING (TTL METERING)

The camera offers a fully automated, camera-controlled flash mode in conjunction with the system-compatible flash units (see p.<?>) for the two exposure modes aperture priority and manual setting. An additional brightening control is provided. However, if the ambient brightness at the shortest possible flash sync speed of 1/180 s would result in overexposure, then only a HSS-compatible flash unit will fire in aperture priority mode. Where that is the case, the shutter speed will be controlled in accordance with ambient light conditions and displayed in the viewfinder.
In aperture priority mode and with manual setting, the camera also allows the use of additional flash techniques like flash synchronization and firing with slower shutter speeds than the sync time 1/180 s, which may be interesting in terms of picture composition. These functions are set on the camera via the menu (please read the next sections for more information).
The camera additionally communicates the sensitivity setting to the flash unit. The flash unit can use this information to automatically adjust its range data, provided the device comes with these displays and the aperture setting selected on the lens is also entered manually on the flash unit. The ISO sensitivity setting cannot be altered via the flash unit on system-compatible units, because the information is received from the camera.

Notes

- Studio flash systems may have a very long flash firing duration. It may therefore be advantageous to select a slower shutter speed than 1/180 s when using such a system.
- The same applies for RF-controlled flash firing for so-called "off-camera" flashes, because they may have a certain time delay due to RF transmission.
- The settings and functions described in the following sections only apply to settings and functions available in this camera and in system-compatible flash units.
- An exposure compensation setting (see p. <ÜS>) on the camera will only affect the measurement of ambient light. Additional settings on the flash unit will be required if you want to simultaneously use compensation of the TTL flash exposure metering in flash mode (parallel or inversely). (Exception: On the Leica SF 26, corrections must be set on the camera via menu control.)

Please read the relevant manual provided with the device for more information about flash use and the various available flash modes when using flash units that are not designed specifically for this camera.

FLASH MODES

- Switch on the flash unit
- Set the desired guide number control mode (e.g. TTL or GNC = Guide Number Control) on the flash unit
- Switching the camera on
- Tap the shutter button before each flash exposure to activate exposure metering
  - The flash unit may not fire if this step is missed by pressing the shutter button down completely and skipping these settings.
- Set the desired exposure mode, shutter speed and/or aperture setting

Take note of the shortest flash sync speed, as it determines whether a "normal" flash or an HSS flash is fired.

HSS (HIGH SPEED SYNC.)
AUTOMATIC FLASH ACTIVATION FOR FAST SHUTTER SPEEDS

A fully automated, camera-controlled HSS flash mode for all shutter speeds and all exposure modes is available in the Leica M10-D for use with system-compatible flash units (see p. <?>). It is activated by the camera automatically if the selected or calculated shutter speed is faster than the sync speed (1/180 s).

Note

The range for HSS flash mode is significantly lower than for TTL.

FLASH CONTROL

FLASH RANGE (SELECTING THE SYNC SPEED / SYNC SPEED RANGE)

Reproduction of the available light is determined by the shutter speed and the aperture. With a permanent setting of the shortest possible shutter speed for flash mode (sync time), an unnecessary, more or less severe underexposure of all subject elements not correctly lit by the flash will frequently occur.
The Leica M10-D allows you to fine tune the shutter speed used in flash mode in combination with aperture priority depending on the conditions of the subject or your own picture composition ideas.

This function is preset to 1/f.

SYNC POINT

Flash exposures are lit by two light sources:
- ambient light
- the flash

Any subject elements lit primarily by the flash will almost always be rendered in perfect focus by the short burst of light, provided the focus is set correctly.
All those subject elements in the same frame lit sufficiently by ambient light or lit from within will be consequently be rendered with varying degrees of sharpness. Whether or not these subject elements will be rendered in sharp focus or blurred and the degree of blurriness all depends on two interdependent factors:
- the shutter speeds
- the speed of motion of the subject elements or camera at the time of exposure

The longer the shutter speed and the faster the motion, the greater the difference between the two superimposed partial images.

The conventional time for firing the flash is at the start of exposure (right after the first shutter curtain has completely opened the image window). This may result in apparent contradictions, e.g. the picture of a vehicle being overtaken by its own light trail.

This function is preset to Start of Exposure and cannot be altered.

FLASH EXPOSURE COMPENSATION

This function can be used to selectively reduce or strengthen the flash exposure regardless of the exposure from available light, e.g. in a picture taken in the evening or to brighten the face of a person in the foreground while retaining the same lighting ambiance.

This function can only be set and implemented via the flash unit*.

Notes

- A brighter flash illumination with Plus correction will require a higher flash intensity and vice versa. Flash exposure compensation will therefore impact on the flash range: A Plus correction will decrease it, a Minus correction will increase it.
- Once set, compensation remains active until it is reset to ▯, no matter how many pictures are taken and even after the camera is switched off.

FLASH EXPOSURE DISPLAYS IN THE VIEWFINDER (system-compatible flash units)

The flash icon in the viewfinder display of the Leica M10-D gives feedback on and indicates various operating states.

ϟ does not appear (despite the flash unit being switched on and ready)	• The flash unit cannot fire • A correct operating mode must be set on the flash unit or an HSS-compatible flash unit must be connected
ϟ flashes slowly before the picture is taken (2 Hz)	• The flash unit is not yet ready for use
ϟ lights up before the picture is taken	• The flash unit is ready for use
ϟ remains continuously lit after shutter release*	• The flash is still ready
ϟ flashes rapidly after shutter release (4 Hz)*	• Successful flash photography • The flash unit is not yet ready for further use
ϟ switches off after shutter release*	• Flash intensity was insufficient

*only in TTL flash mode

* SF 40 and SF 64. SF 26 and SF 58 are unavailable.

REVIEW MODE

AUTOMATIC REVIEW OF THE MOST RECENT PICTURE TAKEN IN VISOFLEX

(Setting via app only)
The Auto Review function allows you to view each picture right after it was taken. That allows you to check whether the shot was successful or should be taken again. The function additionally allows – possibly in conjunction with the shutter button – to set the length of time the picture will be displayed.

Factory setting: Function OFF
Other settings are available via app.
(OFF, 1s, 3s, 5s, Permanent)

Note
Both review modes show the last picture in the series or the last picture in the series saved on the currently active card while saving is still ongoing if pictures were taken using the bracketing/interval function.

OTHER FUNCTIONS

DATA MANAGEMENT

DATA STRUCTURE ON THE MEMORY CARD

FOLDER STRUCTURE

The files (= pictures) on the memory cards are saved in automatically generated folders. The first three characters signify the folder number (numerals), the last five the folder name (letters). You can change the numbers and the letters when you create a new folder. By default, the first folder is named "100LEICA", the second "101LEICA", etc. The folder number will be the next available number; you can have max. 999 folders.

FILE STRUCTURE

The file names in these folders consist of eleven characters. By default, the first file is named "L1000001.XXX", the second "L1000002.XXX", etc. "L" stands for the camera brand; you can change the next three characters at any time – numerals or letters can be used. The second group of numbers is the file number: "XXX" stands for the file format (DNG or JPG). If the folder currently in use contains file number 9999, then a new folder is created, in which the file numbering begins at 0001 again.

Notes

- When using memory cards that were not formatted with this camera, the file numbering will begin with 0001 again. Should the memory card already contain a file with a number higher than the last number assigned by the camera, then numbering will be continued from the relevantly highest number on that card.
- A relevant message will be displayed on the LCD panel once folder number 999 and file number 9999 are reached, and all numbering must be reset.

Factory setting: LEICA/L100
Changes available via app.

RECORDING THE IMAGE LOCATION WITH GPS

(only in conjunction with Visoflex)
The GPS (global positioning system) allows the pinpointing of a receiver anywhere in the world. When the function is activated, the Leica M10-D continuously receives the corresponding signals and updates the GPS information. It can write this information - latitude and longitude, height above sea level - to the "EXIF" data.
Once Visoflex is attached, the GPS function is activated automatically. Please read "Important notes regarding the use of GPS" (see p. 5).

DATA TRANSFER

The picture data on a memory card can be transferred to a computer via a card reader for SD/SDHC/SDXC cards.

USING RAW DATA (DNG)

You will need specific software for editing data in DNG format, e.g. the professional raw data converter Adobe® Photoshop® Lightroom®. It allows high-quality conversions of stored raw data. It furthermore provides quality-optimized algorithms for digital color processing, delivering exceptionally low-noise photographs with incredible resolution.
During editing, you can adjust parameters like gradation, sharpness etc. in retrospect to achieve the best possible image quality.

RESETTING THE CAMERA TO FACTORY SETTINGS

This function allows you to reset all menu settings at once to restore the factory settings.

- Press and hold the function button and the focus button simultaneously for 5s

Note
The date, time, folder numbers and file numbers will not be reset.

FIRMWARE UPDATE

Leica is continuously working on the further improvement and optimization of your camera. Since many camera functions are entirely controlled by software, some of these improvements and additions to the functional scope can be installed in retrospect. Leica offers firmware updates at irregular intervals, which you can download from our website.
Leica will notify you of any new updates, once you have registered your camera.

More information about registering, firmware updates and their downloads for your camera, as well as any amendments and additions to the details provided in this manual can be found in the customer area of our website at: https://owners.leica-camera.com

- Save the firmware file to an SD card
- Ensure that the camera is switched OFF
- Press and hold the function button and switch on the camera
  - UP will appear in the viewfinder during the update process
  - In case of an error, Err will be displayed
  - End will appear after a successful update is completed

REMOTE CAMERA CONTROL

LEICA FOTOS APP

Experience the new Leica FOTOS app. The Leica FOTOS app is a digital tool with lots of exciting options and the photographer becomes one with his Leica camera like never before. You can now link all your WLAN-capable Leica cameras via a single app to transfer images easily and instantly, capture the essence of unforgettable moments, manage, optimize and share your photos – anytime, anywhere.

- Scan the barcode or download from the Apple™ App Store™/ Google™ Play Store™

CARE/STORAGE

CAMERA HOUSING

- Keep your equipment meticulously clean, as any kind of dirt residue represents a breeding ground for micro organisms.
- Only clean the camera with a soft, dry cloth. Stubborn dirt should first be moistened with a watered-down detergent and can then be wiped away with a dry cloth.
- Wet a soft cloth with tap water, wring it out thoroughly and wipe the camera clean of any salt water spray. Then wipe it down thoroughly with a dry cloth.
- Wipe the camera with a clean, lint-free cloth to remove stains and fingerprints. Tougher dirt in hard to reach corners of the camera housing can be removed with a small brush. Take care not to touch the shutter blades.
- Store the camera in a closed and padded container to prevent friction damage and protect it against dust accumulation.
- Keep the camera in a dry, sufficiently ventilated place, where it will not be subjected to high temperatures and humidity. Make sure to remove all moisture from the camera if it was used in humid conditions.
- Do not store the camera in a leather case for extended periods of time to prevent fungal contamination.
- Empty you camera bag completely if it ever gets wet during use. Your equipment might otherwise be subjected to moisture and tanning agents released by the moist leather.
- All mechanical bearings and sliding surfaces on your camera are lubricated. Remember to press the shutter button several times every three months to prevent the lubrication points hardening if the camera will not be used for an extended period of time. We also recommend repeated adjustment and use of all the other operating elements.
- When using your camera in tropical climates, make sure to expose the equipment to sunlight and fresh air as much as possible to prevent fungal growth. Storage in airtight containers or cases is recommended only in conjunction with a desiccant like silica gel.

LENS

- A soft-bristle brush will usually suffice to remove dust from the outer lenses. Remove more severe soiling with a clean, soft cloth that is completely free of foreign matter. Wipe the lens in a circular motion from the center outward. We recommend using microfiber cloths that come in a protective container and are available from photography shops and other optical retailers. These cloths are machine-washable at 40°C. Do not use fabric softener and do not iron them. Never use spectacle lens cleaning cloths, as these are soaked in chemicals, which could damage the glass of the camera lenses.
- Attach a transparent UVA filter for optimal front lens protection in unfavorable conditions (e.g. sand, salt water spray). Please remember that the filter may create unwanted light reflections in some backlight situations and in case of high contrasts.
- The lens caps supplied protect the lens against accidental fingerprint smudges and rain.
- The bayonet is lubricated ex works with an ultra fine grease film to ensure smooth lens changes. Under normal conditions, this lubrication will remain intact for many years and even if the bayonet is wiped clean from time to time. The lubrication will have to be renewed after a degreasing agent was used for cleaning. Simply dab a bit of Vaseline onto the bayonet with you finger and use a clean cloth to rub it evenly and thinly all over.

- Make sure not to apply too much lubricant to the bayonet and take particular care not to apply grease to the 6-bit encoding. Too much lubricant will result in grease residue lodging in the gap, where dirt will accumulate. The legibility of the code will be impacted, which may cause malfunctions in digital M models.
- All mechanical bearings and sliding surfaces on your lens are lubricated. Make sure to move the focus ring and the
- aperture setting ring periodically to prevent seizing if the lens will not be used for an extended period of time.

VIEWFINDER

- Switch off your camera and leave it to stand at room temperature for around 1 hour if condensation has formed on or in the camera. The condensation will disappear, once the camera temperature has reached room temperature.

RECHARGEABLE BATTERY

- Remove the rechargeable battery if the camera will not be used for an extended period of time, as the date and time setting will be lost latest after 2 months.
- Lithium-ion rechargeable batteries should only be stored partially charged, i.e. not fully depleted or fully charged. The camera LCD panel will show the current charge level of the battery. Charge the battery twice a year for around 15 minutes to avoid deep discharge in case of very long storage periods.

MEMORY CARDS

- Make sure to store memory cards in their anti-static container when not in use.
- Do not store memory cards where they will be exposed to high temperatures, direct sunlight, magnetic fields or static electricity. Always remove the memory card if the camera will not be used for an extended period of time.
- We recommend formatting the memory card from time to time, because fragmented residual data from deleted files may block some of its storage capacity.

SENSOR

SENSOR CLEANING

- Any inspection or cleaning of the sensor should be done in an environment that is as much as possible dust-free to prevent further contamination.
- Use clean, possibly ionized gases like air or nitrogen to blow loose dust from the cover glass of the sensor. We recommend using (rubber) bellows without a brush. Some specialist, low-pressure cleaning sprays, e.g. "Tetenal Antidust Professional" can also be used (follow the instructions provided for the product).
- Please contact Leica Customer Care if you are unable to remove the particles with the methods described above.
- The message **bc** will appear in the viewfinder if battery capacity falls below 50% with the lens aperture fully open. The shutter will automatically close when the camera is switched off.
- Make sure that the aperture is unobstructed and that nothing can prevent the shutter from closing correctly, as this would result in damage to the equipment!

Alternatively, send your camera to the Leica Customer Care department for sensor cleaning. This service is not part of the warranty offering and will therefore incur charges. Alternatively, you can do the cleaning yourself. The function will keep the shutter open and allow access to the sensor.

Ensure the following before you start cleaning:

– No Visoflex
– No Live View mode via the app
– No interval shooting set

Clean the sensor

- ▸ Press and hold the function button
- ▸ Press the shutter button down fully
- ▸ Clean the sensor
  - Make sure you follow the instructions below.
- ▸ Switch off the camera after you finish cleaning
  - The shutter will remain open for another 10 s for safety reasons.

Notes

- The aperture will remain open if battery capacity falls below the switch-off threshold during sensor cleaning.
- When the camera is switched off, the status LED will flash for 10 s and then the aperture will close. If the camera is switched on again during that time, then the aperture will close and the camera will function normally.

Stop cleaning

- Switch the camera off on the main switch

Important

- Leica Camera AG will not accept any responsibility for damages caused by the user when cleaning the sensor.
- Do not attempt to physically blow dust particles off the cover glass of the sensor. The smallest droplets of saliva can cause stains that will be difficult to remove.
- Do not use high pressure compressed air cleaners as they may also cause damage.
- Avoid touching the sensor surface with any hard objects during inspection and cleaning.

FAQ

Camera	
Messages: Battery capacity too low for sensor cleaning Please stop sensor cleaning immediately	– Does the battery have sufficient charge? *Use a charged battery.* – The battery is flat. *Replace the battery.*
The camera won't switch on.	– Is the battery inserted correctly? – Does the battery have sufficient charge? *Use a charged battery.* – Is the bottom cover inserted correctly? – Is there visible condensation? *This may occur when the camera is moved directly from a cold environment into heat. Wait for the camera to acclimatize and the condensation will disappear.*
The date and time display is incorrect or not shown.	– The camera hasn't been in use for an extended period of time and no battery was inserted. *Insert a fully charged battery.* *Set the date and time.*
Rechargeable battery/charger	
The camera switches off again immediately after it is switched on.	– Does the battery have sufficient charge for camera operation? *Charge the battery or insert a charged battery.*
Pictures	
The camera won't take a picture.	– The system is currently transferring picture data to the memory card and the cache is full. – The memory card is full and the cache is full. *Delete some pictures before taking new ones.* – No memory card is inserted and the cache is full. – The memory card is write-protected or defective. *Deactivate the protection or insert another memory card.* – Image numbering has reached its limit. *Reset the image numbering.* – The sensor is overheating. *Allow the camera to cool down.*
The picture won't save.	– Have you inserted a memory card? – The memory card is full. *Delete some pictures before taking new ones.*

FACTORY SETTING

	Main menu	Submenu
Lens Detection	Auto	
Drive Mode	Single	
Exp. Metering	Center-weighted	
Flash Settings	Flash Sync. Mode Max. Flash Sync. Time	Start of Exp. 1/f
ISO Setup	M-ISO Maximum Auto ISO Maximum Exposure Time	12500 12500 1/2f
White Balance	Auto	
File Format	DNG	
Auto Review*	Off	
Capture Assistants	Focus Peaking	
EVF Brightness	Auto	
Auto Power Saving	10 minutes	
GPS*	On	
Language	English	

*This function is available only with the Leica Visoflex viewfinder attached (optional accessory).

KEYWORD INDEX

6-bit encoding ... 40
Accessory ... 3
Aperture ... 31
Aperture priority ... 51
Aperture setting ... 15
Assist function ... 46
Attaching/detaching the lens ... 29
Auxiliary display ... 55
Bright-line frame ... 16/42
Brightness, viewfinder ... 36
Bulb (B) ... 32
Capture assistants ... 46/55
Care ... 66
Care instructions ... 66
Carry strap ... 22
Center-weighted metering (exposure) ... 49
Charger ... 22
Charger, connection ... 22
Charge status (charger) ... 23
Charge status (rechargeable battery) ... 25
Color saturation ... 39
Contrast (image properties) ... 39
Data storage, saving to PC ... 64
Data transfer ... 64
Depth of field scale ... 15
Displays on the LCD panel/in the viewfinder ... 16
Distance ... 44
DNG resolution ... 38
Error message ... 69
EV level ... 54
Exposure ... 49
Exposure, manual ... 52
Exposure compensation ... 54
Exposure metering methods ... 49
Exposure setting ... 51
Exposure simulation ... 52
FAQ ... 69
File name ... 64
Firmware ... 65
Focal length ... 42
Focus Aid ... 46
Focusing ... 44
Focusing, manual, in Live View mode ... 45
Focusing, manual, in the viewfinder ... 44
Focus metering methods ... 44/45
Focus peaking ... 47
Folders ... 63
Format ... 38
Formatting ... 11
General notes ... 9
Grid lines ... 55
Histogram ... 55
Image field ... 42
Image properties ... 38
Inserting/Removing the battery ... 24
Internal battery ... 10
ISO sensitivity ... 48
ISO settings ... 48
ISO setting wheel ... 32
JPG ... 38
JPG resolution ... 38
Language ... 34
LED ... 14
Legal information ... 4
Lens detection ... 40
Lenses, compatible ... 27
Live View ... 44
Long-term exposure ... 54
LV zoom ... 46
Magnification (picture) ... 46
Maximum exposure time ... 48
Memory card ... 26/63/64
Memory card, compatibility ... 11/26
Memory card insertion/removal ... 26
Menu items ... 71
Menu language ... 34
Message ... 69
Metering field ... 16/42/52
Metering memory lock ... 52
M lenses ... 27
Monochrome ... 39
Monochrome photography ... 39
Multi-field metering (exposure) ... 49
Notes, legal ... 4
Notes, safety ... 7
Open/Close the bottom cover ... 24
Parts (camera) ... 14
Parts (lens) ... 15
Picture sequence ... 56
Playback/Review, automatic ... 62
Playback/Review mode ... 62
Power off, automatic ... 35
Rangefinder ... 42
Raw data ... 64
Rechargeable battery ... 23
Regulatory information ... 4
Repairs ... 76

Replacement parts 3
Reset 64
Resolution 38
R lenses 27
Safety remarks 7
Saturation 39
Scope of delivery 2
SD/SDHC/SDXC card 26/64
Self-timer 56
Sensor 9/68
Sensor cleaning 68
Sharpness (image properties) 39
Sharpness setting (focusing) 44
Shutter 14
Shutter button 31
Shutter release 31
Shutter speed 32
Shutter speed setting 32
Shutter speed setting wheel 32
Split image method 45
Spot metering (exposure) 49
Standby mode 35
Storage 66
Storage 66
Superimposed image method 44
Switching off 30
Switching on 30
Technical data 73
The B setting 54
Thumbwheel 33
Time 34
Troubleshooting 69
TTL metering 49
View (camera) 14
View (lens) 15
View angles 42
Viewfinder 42
White balance 49

TECHNICAL DATA

Designation
Leica M10-D
Camera type
Digital camera with rangefinder system
Type No.
9217
Sensor
CMOS chip, active surface approx. 24 x 36 mm
File format
DNG™ (raw data, loss-free compression)
Resolution
DNG™: 5976 x 3992 pixels (24 MP)
File size
DNG™: 20-30 MB
Buffer memory
2 GB/16 pictures in series
Storage medium
SD cards up to 2 GB, SDHC cards up to 32 GB, SDXC cards up to 2 TB
Switching the camera on/off
Via main switch on the rear, optional automatic deactivation of the camera electronics after around 10 minutes, reactivation via a tap on the shutter button
Lens mount
Leica M bayonet with additional sensor for 6-bit encoding
Compatible lenses
Leica M lenses, Leica R lenses via adapter (see p. 27)
Menu language
(only with Leica Visoflex viewfinder attached, optional accessory)
English
GPS
(only with Leica Visoflex viewfinder attached, optional accessory)
Not available everywhere due to country-specific legislation, i.e. enforced automatic shutdown in those countries, data is written to EXIF header of the picture files
WLAN
The Leica app is required for the use of the WLAN function.
The Leica app is available from the Apple App Store™ or in the Google Play Store™

Rangefinder

Design principle
Large, bright-line rangefinder with automatic parallax compensation
Eyepiece
Suitable for -0,.5 dptr.; optional corrective lenses available: -3 to +3 dptr.
Display
Four-digit digital display with items show on the top and bottom

Image field limiter
Two lit frames: 35 mm + 135 mm, 28 mm + 90 mm, 50 mm + 75 mm (automatic switch-over when lens is attached)
Parallax compensation
The horizontal and vertical difference between viewfinder and lens is compensated automatically in line with the relevant focus setting
Congruence of viewfinder and actual image
The size of the bright-line frame matches the distance:
- at 2 m: the exact sensor size of approx. 23.9 x 35.8 mm
- at infinity: (depending on focal length) approx. 7.3% (28 mm) to 18% (135 mm)
- less than 2 m: less than sensor size

Magnification
x0.73 (all lenses)
Large-base rangefinder
Split or superimposed image rangefinder shown as a bright field at the center of the viewfinder image
Actual metering basis
50.6 mm: 69.31 mm (mechanical metering basis) x x0.73 (viewfinder magnification)

Shutter

Shutter type
Metal blade focal plane shutter with vertical movement
Shutter speeds
Aperture priority mode (**A**): stepless from 4 min to 1/4000 s (max. exposure only for ISO 100/200).
Manual setting: 8 s to 1/4000 s in half increments, from 8 s to 4 min in full increments.
Bulb (**B**): for long-term exposure up to max. 4 min. (in conjunction with self-timer T function):
1. Shutter release = shutter opens, 2. Shutter release = shutter closes

Taking the picture

Shutter button
Two-stage (1. step: Activation of the camera electronics including exposure metering and metering memory lock (in aperture priority mode); 2. step: firing)

Exposure

ISO sensitivity range
Automatic (**A**): ISO 200 to ISO 50000
Manual: ISO 100 to ISO 50000 (from ISO 200 adjustable in 1/3 ISO increments, setting available via app only)
White balance
Automatic (Auto)
TTL (exposure metering through the lens), with working aperture
Metering principle/method
When measuring the light reflected by the light blades of the 1. shutter curtain onto a measuring cell: strongly center-weighted; when metering on the sensor: spot-weighted, center-weighted, multi-field metering
Measuring range
At room temperature and normal humidity for ISO 100 at aperture 1.0 EV -1 to EV 20 at aperture 32. The LEDs in the viewfinder will flash if the measuring range is undercut/overshot
Exposure modes
Aperture priority mode (**A**): Automatic shutter speed control with manual aperture preselection
Manual: Manual settings for shutter speed and aperture

Flash exposure control

Flash unit connector
Via accessory shoe with central and control contacts
Synchronization
1. Shutter curtain
Flash sync time
↩ : 1/180 s, slower shutter speeds available, automatic changeover to TTL linear flash mode with HSS-compatible Leica system flash units if sync time is undercut
Flash exposure metering
Using center-weighted TTL pre-flash metering with Leica flash units (SF 60, SF 40, SF 64, SF 26) or with system-compatible flash units, remote controlled flash SF C1
Flash measuring cell
2 silicon photodiodes with converging lens in the base of the camera
Flash exposure compensation
SF 40: ±2 EV in 1/2 EV increments
SF 60: ±2 EV in 1/3 EV increments
Displays in flash mode (in the viewfinder only)
Using flash symbol LED

Power supply

Rechargeable battery (lithium-ion battery Leica BP-SCL5)
1 lithium-ion rechargeable battery, rated voltage 7.4 V; capacity 1100 mAh, max. charging voltage/current: 1000 mADC, 7.4 V; operating conditions (in the camera): +0 to +40°C; manufacturer: PT. VARTA Microbattery, Made in Indonesia
Charger (Leica BC-SCL5)
inputs: 100-240 VAC, 50/60 Hz, 300 mA with automatic switch-over or 12 VDC, 1.3 A; output: DC, rated voltage 7.4 V, 1000 mA / max. 8.25 V, 1100 mA, operating conditions: +10 to +35°C, manufacturer: Guangdong PISEN Electronics Co. Ltd., Made in China

Camera housing

Material
Full metal housing: Magnesium die-cast, leather covering
Top cover and bottom cover: Brass, black
Interfaces
ISO accessory shoe with additional control contacts for Leica flash units and Leica Visoflex viewfinder (optional accessory)
Tripod thread
A 1/4 DIN 4503 (1/4") made of stainless steel in the base
Operating conditions
0 - +40°C
Dimensions (WxHxD)
approx. 139 x 37.9 x 80 mm
Weight
approx. 660 g (with battery)

LEICA CUSTOMER CARE

Please contact the Customer Care department of Leica Camera AG for the maintenance of your Leica equipment and for help and advice regarding Leica products and how to order them. You can also contact the Customer Care department or the repair service provided by your regional Leica subsidiary for repairs or warranty claims.

Leica Camera AG
Leica Customer Care
Am Leitz-Park 5
35578 Wetzlar
Germany

Phone: +49 (0)6441 2080-189
Fax: +49 (0)6441 2080-339
Email: customer.care@leica-camera.com
www.leica-camera.com