DEEP COOL

GAMMAXX400/GT/GTE Series

Configuration table			
Product Name	Parts	Socket Compatibility	Connection
GAMMAXX 400S	1~10/16/17	INTEL-A/AMD	—
GAMMAXX 400S(INTEL)	1/2/3/4/6/7/8/9/10/16/17	INTEL-A	—
GAMMAXX GT S	1~11/16/17	INTEL-A/AMD	B
GAMMAXX 400 V2(Red)	1~10/16/17	INTEL-A/AMD	—
GAMMAXX 400 V2(Blue)	1~10/16/17	INTEL-A/AMD	—
GAMMAXX GTE V2	1~11/16/17	INTEL-A/AMD	B
GAMMAXX GT V2	1~12/16/17	INTEL-A/INTEL-B/AMD	A
GAMMAXX GT A-RGB	1~11/13~17	INTEL-A/INTEL-B/AMD	C

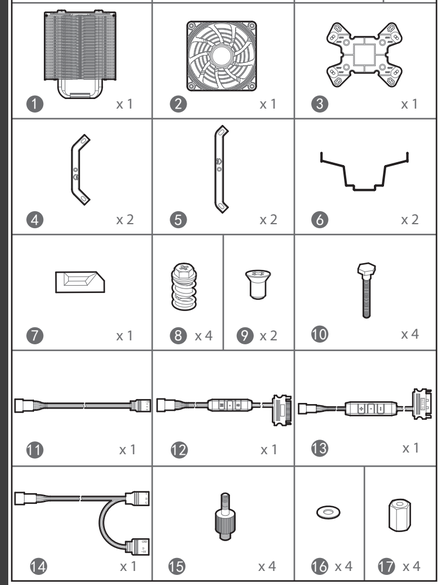

INTEL-A LGA1151 / 1150 / 1155 / 1366

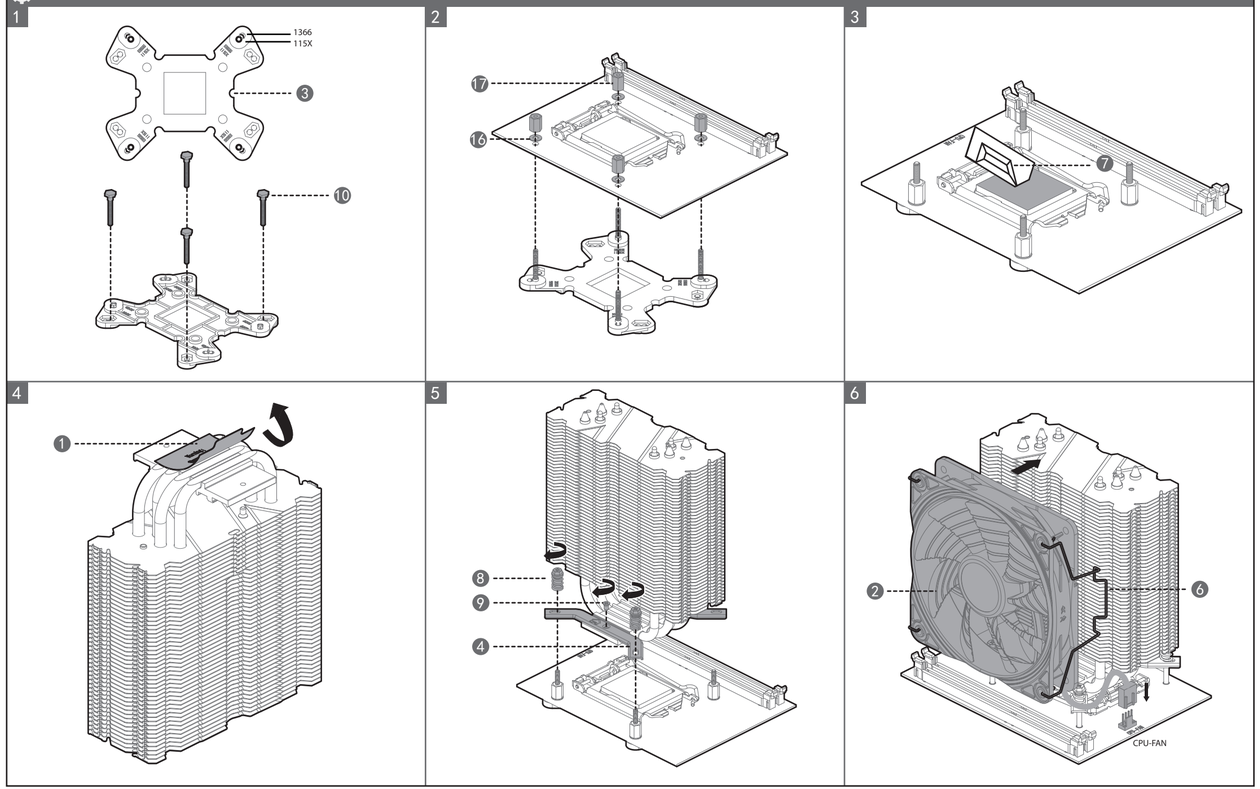

INTEL-B LGA2066 /2011-v3 / 2011

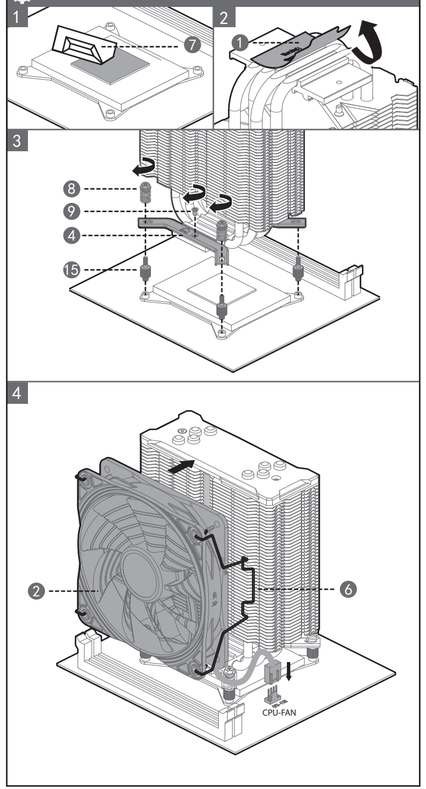

EN For further information, please consult www.deepcool.com

DE Für weitere Informationen, besuchen Sie bitte unsere Webseite: www.deepcool.com

IT Per ulteriori informazioni, si prega di consultare: www.deepcool.com

FR Pour plus d'informations, s'il vous plaît consulter le site: www.deepcool.com

ES Para más información, por favor consulte nuestra página web: www.deepcool.com

PT Para mais informações, por favor consulte: www.deepcool.com

PL W celu uzyskania dalszych informacji, proszę kliknąć: www.deepcool.com

CS Pro další informace se prosím obraťte: www.deepcool.com

RU Для дополнительной информации, пожалуйста, посетите www.deepcool.com

KK Қосамша ауапарат үшін www.deepcool.com жүгініңіз

TR Daha fazla bilgi için, lütfen: www.deepcool.com

JP 製品に関する最新の情報を右記サイトで公開しておりますwww.deepcool.com

KR 보다 자세한 내용은 아래의 홈페이지를 참조하세요 www.deepcool.com

CH 如欲取得更多資料，請瀏覽網站www.deepcool.com

CH 如需要更多信息，请浏览网站www.deepcool.com

Patent Pending

Brands and designs are trademarks from Beijing Deepcool Industries Co., Ltd.
Devices not included.
All rights reserved.

Beijing Deepcool Industries Co., Ltd.

MADE IN CHINA

AMD AM4 / AM3+ / AM3 / AM2+ / AM2 / FM2+ / FM2 / FM1

1

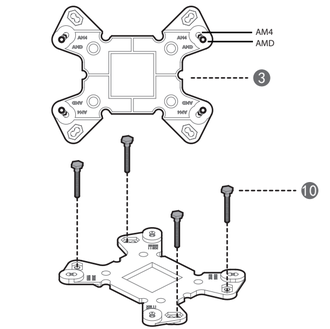

2

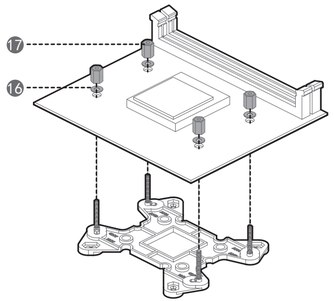

3

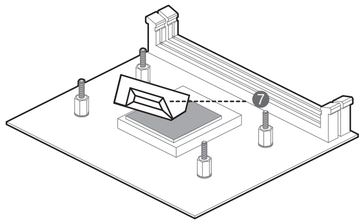

4

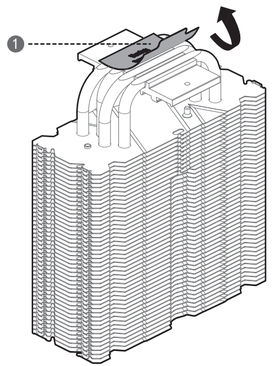

5

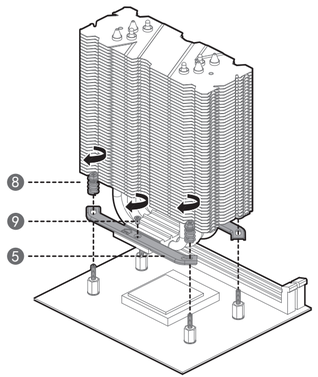

6

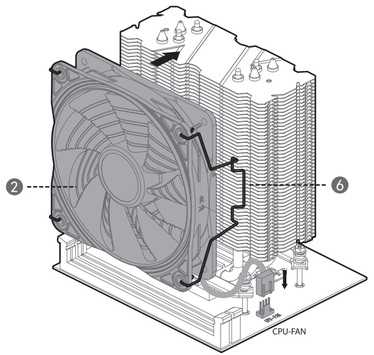

connection

A

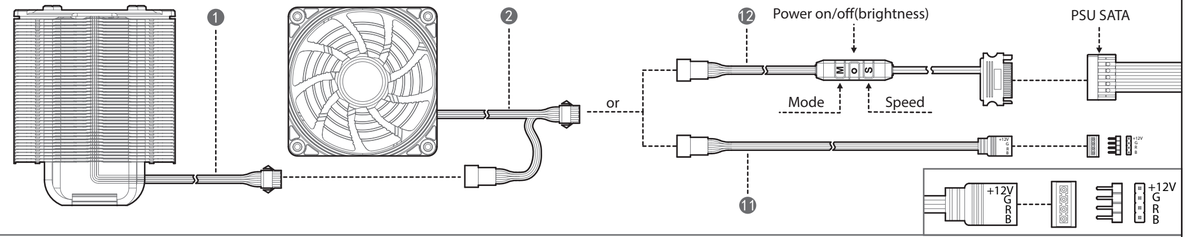

B

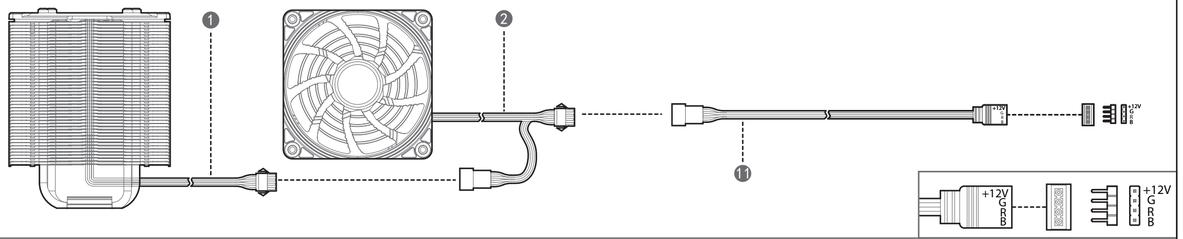
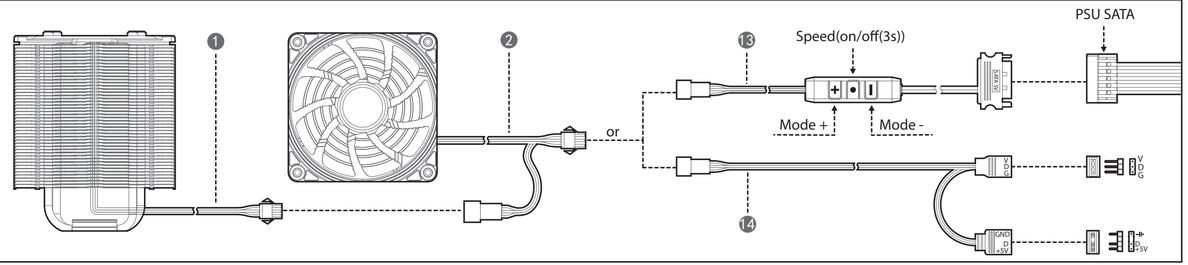
C