LogiLink®
PROFESSIONAL

# One-sectioned Wall-mounted Cabinet, disassembled

## Technical Features

| | |
|---|---|
| **Material:** | 1.2 mm steel |
| **Maximum Static Load:** | Up to 50 kg |
| **Finish:** | Electrostatic powder paint |
| **Color:** | RAL 7035 light grey or RAL 7021 dark grey |

## Standard Configuration

- Dimensions: 6/9/12/15 U, 540 mm width & 450 mm depth
- Glass door with cylindrical lock
- Adjustable 19" profile rails
- Cable entry from 3 sides
- Disassembled flat pack delivery

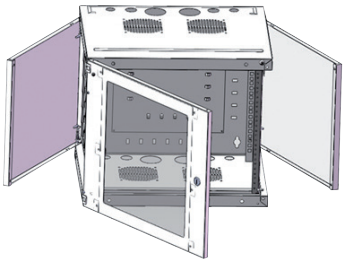

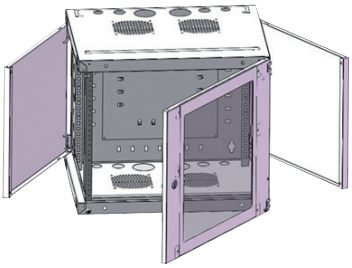

RoHS compliant CE

* The specifications and pictures are subject to change without notice.
*All trade names referenced are the registered namework of their respective owners.

LogiLink® PROFESSIONAL

## One-sectioned Wall-mounted Cabinet - RAL 7021 Dark Grey

| Height U | Outer Width (W) mm | Outer Depth (D) mm | Outer Height (H) mm | 19" Rails Adjustable Depth Range mm | Weight kg | Part No. | EAN Code |
|---|---|---|---|---|---|---|---|
| 6U | 540 | 450 | 330 | 110-350 | 14 | W06F64B | 4052792016321 |
| 9U | 540 | 450 | 460 | 110-350 | 17 | W09F64B | 4052792016345 |
| 12U | 540 | 450 | 595 | 110-350 | 20 | W12F64B | 4052792016369 |
| 15U | 540 | 450 | 725 | 110-350 | 25 | W15F64B | 4052792016383 |

## One-sectioned Wall-mounted Cabinet - RAL 7035 Light Grey

| Height U | Outer Width (W) mm | Outer Depth (D) mm | Outer Height (H) mm | 19" Rails Adjustable Depth Range mm | Weight kg | Part No. | EAN Code |
|---|---|---|---|---|---|---|---|
| 6U | 540 | 450 | 330 | 110-350 | 14 | W06F64G | 4052792016314 |
| 9U | 540 | 450 | 460 | 110-350 | 17 | W09F64G | 4052792016338 |
| 12U | 540 | 450 | 595 | 110-350 | 20 | W12F64G | 4052792016352 |
| 15U | 540 | 450 | 725 | 110-350 | 25 | W15F64G | 4052792016376 |

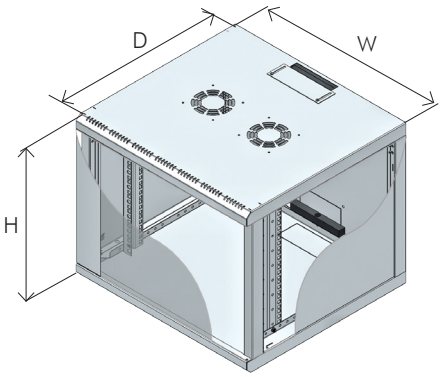


RoHS compliant

* The specifications and pictures are subject to change without notice.
*All trade names referenced are the registered namework of their respective owners.